ROOTES

LIGHT CAR RANGE

WITH 1725cc. ENGINE

A PRODUCT OF THE ROOTES GROUP

WORKSHOP MANUAL

FOR

ROOTES

LIGHT CAR RANGE

(ALL MODELS WITH 1725 ENGINE)

ISSUED BY

ROOTES SERVICE DIVISION . COVENTRY . ENGLAND

CENTRAL PARTS ORGANISATION

ROOTES MOTORS (PARTS) LTD. · COVENTRY ROAD · BIRMINGHAM · ENGLAND

WORLD EXPORTERS

ROOTES LIMITED PICCADILLY . LONDON . ENGLAND

PUBLICATION No. W.S.M.145
PART No. 6601231

COPYRIGHT RESERVED

PRINTED IN ENGLAND

NOTE

The manufacturers reserve the right to alter specifications at any time without notice.

INDEX TO SECTIONS

FOREWORD	5
General data	II
Cooling system	A
Engine	B
Fuel system	C
Clutch & propeller shaft	D
Gearbox & overdrive	E
Front suspension	F
Rear axle	G
Rear suspension	H
Steering	J
Brakes	K
Wheels and tyres	L
Electrical system	N
Body	O
Recommended lubricants	P
Heater	R
Special tools	S

ROOTES GENUINE PARTS

Rootes Genuine Parts are identical to the high quality Factory Parts installed in new Rootes vehicles, made by the same craftsmen, on the same machines.

A first class Parts service is available through a world-wide network of Rootes Dealers.

Always insist on Rootes Genuine Parts.

FOREWORD

Every possible care is taken during the manufacture of Rootes cars to ensure that they leave the factory capable of giving many miles of trouble-free motoring. **Proper lubrication and maintenance are absolutely essential if satisfactory performance is to be maintained.** For details of the factory's recommendations, reference should be made to the owner's handbook supplied with the car.

When undertaking any repairs or overhaul it is essential that the unit to be worked on is cleaned and kept clean while the work progresses. Dirt is detrimental to the correct functioning of a vehicle and conducive to a high rate of wear.

INDEX

The various units and systems of the vehicle are dealt with in sections which are listed on page 3, each being distinguished by a reference letter. Each section thus referred to opens with a contents and index page, so that any particular operation can be easily located.

GENERAL DATA

Comprehensive information regarding dimensions, tolerances and weights is given at the beginning of the Manual.

ROOTES SPECIAL TOOLS

Certain service operations are greatly facilitated by the use of the specially designed tools manufactured by Messrs. V. L. Churchill & Co., London Road, Daventry, Northants, England. The use of these tools is described under the appropriate section headings.

DECENTRALISED SERVICE

In order to provide the best possible service for owners, the Rootes dealer organisation throughout the world forms a link between the owner and the factory. All problems relating to the servicing of cars are dealt with through that organisation, dealers having behind them the backing of the factory service department.

Owners who require advice or information which is not dealt with in this Workshop Manual should direct their enquiries to their Rootes dealer. *In all correspondence it is essential that the full chassis number, including prefix and suffix letters is quoted* and that reference is made to any previous correspondence. The chassis number, including the prefix and suffix letters will be found stamped on a plate fixed to the bonnet lock platform. The number is visible from under the bonnet.

The engine number will be found on the right-hand side of the cylinder block. This information may be required for customs purposes.

FROST PRECAUTIONS

Attention is drawn to the recommendations given in Section "A" (Cooling System). The importance of taking proper precautions against damage by frost cannot be over-emphasised.

ROOTES CONCESSIONAIRE COMPANIES & REGIONAL OFFICES

AUSTRALIA

Rootes (Australia) Ltd.,
P.O. Box 100,
Port Melbourne, S.C.7,
Victoria, Australia

CANADA

Rootes Motors (Canada) Ltd.,
P.O. Box 174, Station "H",
Toronto 13, Ontario, Canada

Rootes Motors (Canada) Ltd.,
25 St. James Street,
Ville St. Pierre,
Montreal, P.Q., Canada

Rootes Motors (Canada) Ltd.,
3135 West Broadway,
Vancouver, B.C., Canada

CARIBBEAN

Rootes Motors (Western) Ltd.,
P.O. Box 1479,
Nassau, Bahamas

EAST AFRICA

Rootes (Kenya) Ltd.,
P.O. Box 3020,
Nairobi, Kenya

EUROPE

Rootes (Belgique) S.A.,
126 Rue de Linthout,
Brussels 4, Belgium

Rootes Motors S.A.,
6 Rond Pont des Champs Elysees,
Paris 8, France

Rootes Autos S.A.,
10 Rue du Commerce,
1204 Geneva, Switzerland

Rootes Italia S.P.A.,
Torre Velasca,
Piazza Velasca 5, Milan, Ital

Rootes Autos (Deutschland) GmbH.
4 Dusseldorf-Rath,
Overhausenerstrasse 17,
P.O. Box (Postfach) 171, Germany

Rootes Motors, A.B.,
Sveavagen 35-37
Stockholm C, Sweden

Rootes Espana, S.A.,
Alcala 95 Piso 6,
Madrid 9, Spain

FAR EAST

Rootes Limited,
Room 1003/4, Union House,
Chater Road,
Hong Kong

Yamato Motor Co. Ltd.,
22–10 Minami-oi-6 Chome,
Shinagawa-ku,
Tokyo, Japan

MEXICO

Refacciones Britannicas S.A.,
Insurgentes Norte 514, F.,
Mexico 4, D.F.

MID AFRICA

Rootes (C.A.) (PVT) Ltd.,
P.O. Box 2382,
Burnley Road,
Salisbury, Rhodesia

MIDDLE EAST

The Rootes Group,
P.O. Box 2289,
Beirut, Lebanon

SOUTH AFRICA

Stanley Motors Ltd.,
P.O. Box 7712,
Stanmot Building,
30 Eloff Street,
Johannesburg,
Republic of South Africa

UNITED STATES OF AMERICA

Rootes Motors Inc.,
42–32 Twenty-first Street,
Long Island City 1,
New York, U.S.A.

Rootes Motors Inc.,
9830 West Pico Boulevard,
Los Angeles 35,
California, U.S.A.

VENEZUELA

Rootes Motors de Venezuela S.A.,
Apartado 621,
Valencia,
Edo. Carabobo,
Venezuela

Names and addresses of dealers in the different territories can be obtained from the above.

Telephone numbers are available in relevant local directories.

SCHEDULE OF FREE SERVICE

AFTER COMPLETING FIRST 500 MILES (800 KM)

Cooling System	Examine radiator level and top up if required.
Engine	Check tightness of all cylinder heads (cast iron—hot; aluminium—cold) to correct torque figures. Check manifold nuts for tightness. Examine engine for oil leaks and rectify as necessary. Adjust valve clearances. Examine tension of fan belt and adjust as necessary. Reset contact breaker gap. Drain sump when hot and refill with recommended Shell engine oil.
Clutch and Brakes	Check master cylinder fluid levels. If low, examine for leakage and rectify. Top up as required. Make sure cap vent hole is clear. Examine flexible hoses for twisting or chafing and rectify as necessary. Examine bolts securing back plates or calipers for tightness and retighten as necessary.
Transmission and Controls	Drain gearbox and overdrive (if fitted) and refill. *Note:* If fitted, do not drain Borg-Warner transmission.
Rear Axle	Drain when hot and refill.
Front Suspension and Steering	Check the following for tightness:— Steering box fixing bolts. Steering arm securing bolts. Bolts securing idler lever to chassis. Steering linkage ball joints. Top and bottom swivel bearing nuts. Bottom ball joint bracket fixing. Cross-tube locknuts.

Bolts securing top and bottom fulcrum pins to underframe crossmember.

Bolts securing front crossmember to underframe.

Check wheel camber and track, reset if necessary. (Use gap gauges).

Examine ball pin to socket alignment and correct if required.

Examine front hub bearings for smooth operation. Check end float and re-adjust if necessary.

Chassis Details — Check rear road spring "U" bolts for tightness. Examine prop-shaft coupling bolts for tightness.

Shock Absorbers — Check fixing bolts for tightness.

Lubrication — Carry out complete lubrication of vehicle.

Battery — Examine electrolyte level and top-up if required.

Road Test — Carry out brief road test and make the following adjustments as required:—

Check ignition timing and reset if necessary.

Adjust slow-running.

Test brakes, including handbrake.

Note any body rattles and rectify as necessary.

PROPRIETARY ARTICLES CLAIMS

Dealers should make all claims relative to the items in the following list direct to the manufacturers, in accordance with the addresses given

Ammeter Battery Cables Coil Voltage control regulator Distributor Generator or alternator Bulbs Flasher unit and relay Fuse unit Lamps Starter motor Steering column controls Windscreen wiper	Joseph Lucas Ltd., Service Dept., Great Hampton Street, Birmingham
Horns	*or* Clear Hooters Ltd., Bedworth, Warwickshire
Thermometer Voltage regulator (instruments) Instrument panel Oil gauge Fuel gauge Speedometer and cable Clock (Phillips bulb) Tachometer (impulse type)	S. Smith & Sons (M.A.) Ltd., North Circular Road, Cricklewood, London, N.W.2
Fuel pump	A.C. Delco, Dunstable, Bedfordshire,
Air Cleaner	A.C. Delco, Dunstable, Bedfordshire, *or* Tecalemit (Engineering) Ltd., Plymouth, Devon.
Carburettors (Zenith and Stromberg)	The Zenith Carburettor Co. Ltd., Honeypot Lane, Stanmore, Middlesex
(Solex)	Solex Ltd., 223–231 Marylebone Road, London, N.W.1
Radio	S. Smith & Sons (Radiomobile) Ltd., North Circular Road, Cricklewood, London, N.W.2
Shock absorbers	Armstrong Patents Ltd., Beverley, Yorkshire *or* Girling Ltd., King's Road, Tyseley, Birmingham *or* Woodhead-Monroe, Kirkstall Road, Leeds
Heater and demister	S. Smith & Sons (M.A.) Ltd., North Circular Road, Cricklewood, London, N.W.2

In overseas markets an approach should be made to the proprietary manufacturers local company or agency in the territory in which the vehicle operates

GENERAL DATA

CONTENTS

	Page
GENERAL	
—Dimensions	12
—Capacities	13
BRAKES	24
COOLING SYSTEM	20
CLUTCH	22
ENGINE	14
ELECTRICAL EQUIPMENT	25
FUEL SYSTEM	18
FRONT SUSPENSION	23
GEARBOX	22
IGNITION SYSTEM	20
PROPELLER SHAFT	22
REAR AXLE	23
REAR SUSPENSION	24
STEERING	24
TORQUE LOADING FIGURES	27
WHEELS AND TYRES	24

GENERAL DATA

GENERAL DIMENSIONS

Wheelbase	—Sceptre	8 ft. 5 in.	(256·5 cm.)
	—Vogue		
	—Super Minx		
	—Alpine	7 ft. 2 in.	(218·4 cm.)
	—Rapier	8 ft. 0 in.	(243·8 cm.)
	—Gazelle		
	—Minx		
Track (front)	—Sceptre	4 ft. 3½ in.	(130·7 cm.)
	—Vogue		
	—Super Minx		
	—Alpine (disc wheels)	4 ft. 3 in.	(129·5 cm.)
	(wire wheels)	4 ft. 3¼ in.	(130·2 cm.)
	—Rapier	4 ft. 3¾ in.	(131·4 cm.)
	—Gazelle		
	—Minx		
Track (rear)	—Sceptre	4 ft. 0½ in.	(123·2 cm.)
	—Vogue		
	—Super Minx		
	—Alpine (disc wheels)	4 ft. 0½ in.	(123·2 cm.)
	(wire wheels)	4 ft. 2½ in.	(128·3 cm.)
	—Rapier	4 ft. 0½ in.	(123·1 cm.)
	—Gazelle	4 ft. 1¼ in.	(125·0 cm.)
	—Minx		
Overall length	—Sceptre	13 ft. 11 in.	(424·1 cm.)
	—Vogue (Saloon)	13 ft. 11 in.	(424·1 cm.)
	—Vogue (Estate)	13 ft. 11½ in.	(425·4 cm.)
	—Super Minx	13 ft. 10¼ in.	(422·0 cm.)
	—Alpine	12 ft. 11¼ in.	(394·4 cm.)
	—Rapier	13 ft. 7 in.	(414·0 cm.)
	—Gazelle	13 ft. 8¼ in.	(417·4 cm.)
	—Minx	13 ft. 10 in.	(421·6 cm.)
Overall height	—Sceptre	4 ft. 8⅛ in.	(143·5 cm.)
	—Vogue	4 ft. 10¼ in.	(147·4 cm.)
	—Super Minx	4 ft. 10¼ in.	(147·4 cm.)
	—Alpine	4 ft. 3½ in.	(130·8 cm.)
	—Rapier	4 ft. 9½ in.	(146·0 cm.)
	—Gazelle	4 ft. 9½ in.	(146·0 cm.)
	—Minx	4 ft. 10 in.	(147·3 cm.)
Overall width	—Sceptre	5 ft. 3¾ in.	(162·5 cm.)
	—Vogue	5 ft. 2½ in.	(158·7 cm.)
	—Super Minx	5 ft. 3¾ in.	(162·5 cm.)
	—Alpine	5 ft. 0½ in.	(153·7 cm.)
	—Rapier	5 ft. 1 in.	(154·9 cm.)
	—Gazelle	5 ft. 1½ in.	(156·2 cm.)
	—Minx		

Ground clearance (laden)—Sceptre	5½ in.	(13·9 cm.)
—Vogue		
—Super Minx		
—Alpine	4½ in.	(10·8 cm.)
—Rapier	4½ in.	(11·4 cm.)
—Gazelle	5½ in.	(13·9 cm.)
—Minx		
Turning circle —Sceptre	36 ft.	(10·9 m.)
—Vogue		
—Super Minx		
—Alpine	34 ft.	(10·3 m.)
—Rapier	36 ft.	(10·9 m.)
—Gazelle		
—Minx		
Towing capacity (All models, excluding Alpine) ...	17 cwt.	(864 kg.)

KERB WEIGHT

—Sceptre	2403 lbs. (1090 kg.) or 2421 lbs. (1097 kg.) when automatic transmission fitted
—Vogue (Saloon)	2347 lbs. (1054 kg.) or 2367 lbs. (1063 kg.) when overdrive fitted, or 2385 lbs. (1081 kg.) when automatic transmission fitted
(Estate)	2498 lbs. (1133 kg.) or 2518 lbs. (1141 kg.) when overdrive fitted, or 2536 lbs. (1150 kg.) when automatic transmission fitted
—Super Minx (Saloon) ...	2351 lbs. (1066 kg.) or 2371 lbs. (1075 kg.) when overdrive fitted, or 2389 lbs. (1083 kg.) when automatic transmission fitted
(Estate) ...	2476 lbs. (1123 kg.) or 2496 lbs. (1131 kg.) when overdrive fitted, or 2514 lbs. (1140 kg.) when automatic transmission fitted
—Alpine (STD)	2180 lbs. (989 kg.) or 2200 lbs. (998 kg.) when overdrive fitted
(GT)	2230 lbs. (1012 kg.) or 2250 lbs. (1020 kg.) when overdrive fitted
—Rapier	2305 lbs. (1046 kg.) or 2325 lbs. (1044 kg.) when overdrive fitted
—Gazelle	2233 lbs. (1013 kg.) or 2253 lbs. (1021 kg.) when overdrive fitted, or 2271 lbs. (1030 kg.) when automatic transmission fitted
—Minx	2218 lbs. (1066 kg.) or 2256 lbs. (1033 kg.) when automatic transmission fitted

CAPACITIES

Engine (All models)	7½ pints (9·0 U.S. pints; 4·2 litres)
Gearbox (All models with standard gearbox excluding Sceptre)	3½ pints (4·2 U.S. pints; 1·9 litres)
(Sceptre and other models when fitted with overdrive)	4½ pints (5·4 U.S. pints; 2·5 litres)
Rear axle (All models)	1¾ pints (2·1 U.S. pints; 1 litre)
Coolant (with heater)—Sceptre	12½ pints (15 U.S. pints; 7·1 litres)
—Vogue	
—Super Minx	
—Alpine	
—Minx	
—Rapier	13¼ pints (15·9 U.S. pints; 7·5 litres)
—Gazelle	
Fuel (All models excluding Alpine)	10 gallons (12 U.S. gallons; 45 litres)
(Alpine only)	11 gallons (13·2 U.S. gallons; 50 litres)
Battery (negative earth) All models	38 amp. hr.
Certain export territories ...	51 amp. hr. (60 amp. hr. Sceptre only)

ENGINE—GENERAL (For torque loading figures see end of section)

Number of cylinders	Four
Stroke	3·25 in. (82·55 mm.)
Bore—A grade	3·2102/3·2106 in. (81·539/81·549 mm.)
—B grade	3·2106/3·2110 in. (81·549/81·559 mm.)
—C grade	3·2110/3·2114 in. (81·559/81·569 mm.)
—D grade	3·2114/3·2118 in. (81·569/81·579 mm.)

For service purposes a cylinder bore marked "AT" is grade "A", and a bore marked "BT" is grade "B", etc., the letter "T" being ignored. Its only use is in connection with the production selective assembly grading system.

Capacity—Standard bore	105·1 cu. in. (1724 c.c.)
Compression ratio—Sceptre	9·2 : 1 (high) 8·4 : 1 (low)
—Vogue	
—Super Minx	8·4 : 1 (high) 7·5 : 1 (low)
—Alpine	9·2 : 1
—Rapier	9·2 : 1 (high) 8·4 : 1 (low)
—Gazelle	8·4 : 1 (high) 7·5 : 1 (low)
—Minx	8·4 : 1 (high) 7·5 : 1 (low)

Compression pressure —Sceptre —Vogue	High 175/185 lbs. in² (12·3/13 kg. cm²) Low 165/175 lbs. in² (11·6/12·3 kg. cm²)
—Super Minx	High 165/175 lbs. in² (11·6/12·5 kg. cm²) Low 125/135 lbs. in² (8·8/9·5 kg. cm²)
—Alpine	175/185 lbs. in² (12·3/13 kg. cm²)
—Rapier	High 175/185 lbs. in² (12·3/13 kg. cm²) Low 165/175 lbs. in² (11·6/12·3 kg. cm²)
—Gazelle	High 165/175 lbs. in² (11·6/12·3 kg. cm²) Low 125/135 lbs. in² (8·8/9·5 kg. cm²)
—Minx	High 165/175 lbs. in² (11·6/12·3 kg. cm²) Low 125/135 lbs. in² (8·8/9·5 kg. cm²)

Compression ratio identification	Letter in engine number on cylinder block: H=High; L=Low
Octane fuel range	Use premium fuel with 8·4 : 1 and 9·2 : 1 compression ratios

PERFORMANCE

BHP gross—Sceptre	91 @ 5,500 r.p.m.
—Vogue	
—Super Minx	69·5 @ 4,800 r.p.m.
—Alpine	96·8 @ 5,400 r.p.m.
—Rapier	91 @ 5,500 r.p.m.
—Gazelle (RHD & LHD) Up to B.706001325	69·5 @ 4,800 r.p.m.
—Minx (RHD & LHD) Up to B.006004290	
—Gazelle (RHD only) From B.706001326	62·5 @ 4,200 r.p.m.
—Minx (RHD only) From B.006004291	

BHP nett —Sceptre	85 @ 5,500 r.p.m.
—Vogue	
—Super Minx	65 @ 4,800 r.p.m.
—Alpine	90·5 @ 5,400 r.p.m.
—Rapier	85 @ 5,500 r.p.m.
—Gazelle (RHD & LHD) Up to B.706001325	65 @ 4,800 r.p.m.
—Minx (RHD & LHD) Up to B.006004290	
—Gazelle (RHD only) From B.706001326	58·5 @ 4,200 r.p.m.
—Minx (RHD only) From B.006004291	
Max. torque lbs. ft. (kg.m.)	
—Sceptre	99 (13·68) @ 3,500 r.p.m.
—Vogue	
—Super Minx	91·4 (12·6) @ 2,400 r.p.m.
—Alpine	103 (14·2) @ 3,700 r.p.m.
—Rapier	99 (13·68) @ 3,500 r.p.m.
—Gazelle (RHD & LHD) Up to B.706001325	91·4 (12·6) @ 2,400 r.p.m.
—Minx (RHD & LHD) Up to B,006004290	
—Gazelle (RHD only) From B.706001326	92·2 (12·7) @ 2,200 r.p.m.
—Minx (RHD only) From B.006004291	

ROAD SPEED/ENGINE SPEED

Road speed in m.p.h. at 1,000 engine r.p.m. (k.p.h. in parenthesis)

	STANDARD Top Gear				OVERDRIVE Direct Top Gear		OVERDRIVE (O/D Top Gear)	
Saloons—Sceptre			—		16·4	(26·3)	22·2	(36·2)
—Vogue								
—Super Minx								
—Alpine	17·82	(28·2)	*16·4	(26·3)	16·4	(26·3)	22·2	(36·2)
—Rapier								
—Gazelle	17·45	(28·0)			16·1	(26·2)	21·7	(34·6)
—Minx	17·45	(28·0)			—		—	
Saloons—When fitted with Dunlop "RS5" tyres								
—Sceptre			—		16·3	(26·4)	20·3	(32·9)
—Alpine	17·71	(28·1)	*16·3	(26·4)	16·3	(26·4)	20·3	(32·9)
—Rapier								
Estates —Vogue	16·4	(26·3)			16·6	(26·5)	22·6	(36·4)
—Super Minx	16·1	(26·2)			16·4	(26·3)	21·8	(34·6)

*Alpine for North America only

CYLINDER BLOCK

Material	Cast iron
Max. oversize (with or without liners)	·040 in. (1·02 mm.)
Cylinder liner—Outside diameter	3·357/3·358 in. (85·26/85·29 mm.)
—Interference fit	·002/·004 in. (·05/·10 mm.)

CYLINDER HEAD (For torque loading figures see end of section)

Material	Cast iron or aluminium
Gasket—Type	Varnished steel pressing or steel-copper-asbestos

VALVES

Position and operation	Overhead, pushrod and rockers
Valve clearance (hot) all models	Inlet ·012 in. (·31 mm.); Exhaust ·014 in. (·36 mm.)
Valve timing—Sceptre —Vogue ... ... —Rapier —Alpine	Inlet opens 29° B.T.D.C. Inlet closes 63° A.B.D.C. Exhaust opens 69° B.B.D.C. Exhaust closes 23° A.T.D.C.
—Super Minx ... ... —Gazelle (RHD & LHD) Up to B.706001325 —Minx (RHD & LHD) Up to B.006004290	Inlet opens 19° B.T.D.C. Inlet closes 57° A.B.D.C. Exhaust opens 61° B.B.D.C. Exhaust closes 15° A.T.D.C.
—Gazelle (RHD only) From B.706001326 —Minx (RHD only) From B.006004291	Inlet opens 14° B.T.D.C. Inlet closes 41° A.B.D.C. Exhaust opens 50° B.B.D.C. Exhaust closes 5° A.T.D.C.
Head diameter—Aluminium cylinder head	Inlet 1·505/1·501 in. (38·22/38·12 mm.) Exhaust 1·206/1·202 in. (30·63/30·53 mm.)
Cast iron cylinder head	Inlet 1·471/1·475 in. (37·35/37·45 mm.) Exhaust 1·176/1·172 in. (29·87/29·76 mm.)
Stem diameter—All models	Inlet ·3110/·3105 in. (7·9/7·89 mm.) Exhaust ·3100/·3095 in. (7·87/7·86 mm.)
Angle of valve seats	45°
Angle of valve faces	45°
Stem clearance in guide	Inlet ·0015/·003 in. (·038/·076 mm.) Exhaust ·0025/·004 in. (·063/·102 mm.)
Valve length	Inlet 4·66 in. (11·83 cm.) Exhaust 4·66 in. (11·83 cm.)
Valve spring—Type	Dual
—Retention	Cup and split cotters
—Fitted length	Inner 1·43 in. (36·32 mm.) Outer 1·55 in. (39·37 mm.)
—Load fitted	Inner 35·9 lbs. (16·27 kg.) Outer 70·81 lbs. (32·11 kg.)
Valve guides—Outside diameter	·5640/·5635 in. (14·3/14·27 mm.)
—Length	Inlet 2·0 in. (50·8 mm.) Exhaust 2·15 in. (54·6 mm.)
—Interference fit	·0025/·0045 in. (·063/·114 mm.)
—Fitted height above head	·50 in. (12·7 mm.)

CAMSHAFT

Number and type of bearings	3; steel shell, white metal lined
Journal diameter	1·7477/1·7470 in. (44·392/44·374 mm.)
Bearing internal diameter	1·7500/1·7490 in. (44·45/44·51 mm.)
Bearing running clearance	·003/·0013 in. (·07/·03 mm.)
End float	·002/·003 in. (·05/·07 mm.)

CRANKSHAFT (For torque loading figures see end of section)

Balance	Integrally cast counterweights
Number and type of bearings	5 steel shell, white metal lined
Diameter of main journals "A"	2·375 in. (60·325 mm.)
Diameter of main journals "B"	2·365 in. (60·071 mm.)
Maximum undersize for regrinding	·04 in. (1·01 mm.)
Diameter of crankpin "A"	2·125 in. (55·975 mm.)
Diameter of crankpin "B"	2·115 in. (53·721 mm.)
End float	·002/·008 in. (·05/·203 mm.)
Main bearing running clearance	·0025/·0010 in. (·063/·025 mm.)

CONNECTING ROD (For torque loading figures see end of section)

Material	Steel forging
Type	"H" section
Distance between centres	5·626/5·624 in. (14·29/14·28 cm.)
Big end bearings	Steel shell with copper-lead bearing, indium coated
Big end bore (without bearings)	2·2715/2·2710 in. (57·696/57·683 mm.)
Big end running clearance	·002/·0015 in. (·05/·03 mm.)
Big end, end float	·0125/·0075 in. (·317/·190 mm.)
Small end bore (bushed)—High grade	·9379/·9378 in. (23·822/23·820 mm.) painted white
—Medium grade	·9378/·9377 in. (23·820/23·817 mm.) painted green
—Low grade	·9377/·9376 in. (23·817/23·815 mm.) painted yellow

GUDGEON PIN

Type	Floating
Location	Circlips
Diameter—High grade	·9377/·9376 in. (23·817/23·815 mm.) painted white
—Medium grade	·9376/·9375 in. (23·815/23·812 mm.) painted green
—Low grade	·9375/·9374 in. (23·812/23·809 mm.) painted yellow
—Class of fit	Push fit at 68°F (20°C)

PISTON

Type	Slotted
Material	Aluminium alloy tin plated
Length	3·25 in. (82·57 mm.)
Rings—Compression	Two
—Scraper	One
Compression—Identification mark on crown	HC—High compression
—Identification mark on crown	LC—Low compression
—Piston bowl volume	HC 6·9—7·5 cc.
—Piston bowl volume	LC 15·3—15·7 cc.
Max. permissible weight variation per set	2 drams (3·55 grm.)
Diameter—Grade A	3·2096/3·2092 in. (81·524/81·514 mm.)
—Grade B	3·2100/3·2096 in. (81·534/81·524 mm.)
—Grade C	3·2104/3·2100 in. (81·544/81·534 mm.)
—Grade D	3·2108/3·2104 in. (81·555/81·544 mm.)
—Grade E (for service use only)	3·2112/3·2108 in. (81·565/81·555 mm.)
Oversize available (Grade B bore only)	·030 in. (·76 mm.)
Piston skirt clearance (measured at right-angles to gudgeon pin hole)	·0006/·0014 in. (·015/·035 mm.)
Ring gap (fitted) in Grade A bore—Top ring	·032/·024 in. (·81/·60 mm.)
—Second and scraper	·014/·009 in. (·35/·22 mm.)

LUBRICATION SYSTEM

Pump	Eccentric lobe
Pump drive	Skew gear on camshaft
Normal pressure (hot)	40/45 lbs. in² (2·8/3·2 kg. cm²) engine in new condition
Filter—Type	Full flow (disposable)
Oil cooler—Type (*if fitted*)	Clayton-Dewandre. Steel tube

FUEL SYSTEM

Pump—Operation	Lever by eccentric on camshaft
—Pressure	1½—2 lbs. in² (·11—·18 kg. cm²)
Carburettor—Sceptre, —Vogue, —Rapier	Solex B 32 PAIAS
—Super Minx, —Gazelle, —Minx	Zenith 34 IV
—Alpine	Stromberg 150 CD (twin)

Solex B 32 PAIAS

Settings (sea level to 4,000 ft. (1,219 m.)

	Primary throttle	Secondary throttle
Choke	24	26
Main jet	117·5	130
Air correction	160	160
Fast idle gap	·059/·067 in. (1·5/1·7 mm.)	—
Pilot jet (slow running)	50	100
Pilot air bleed	120	80
Pump jet	·70	—
Emulsion tube	15200	—
Air cleaner	Tecalemit—Fibre pad	
Strangler control	Manual	—
Slow running speed	800-850 r.p.m.	—

Zenith 34 IV

Settings (sea level to 4,000 ft. (1,219 m.)	‡	†
Choke	27 mm.	24 mm.
Main jet	92	70
Compensator jet	115	122
Fast idle gap	·043 in. (1·1 mm.)	·043 in. (1·1 mm.)
Pilot jet (slow running)	45	45
Slow running air bleed	140	140
Pilot air bleed	—	1·2 and 1
Capacity vent screw	none	open
Pump jet	55 (short stroke)	55 (short stroke)
Needle valve	2·0 mm.	2·0 mm.
Needle valve washer	2·0 mm.	2·0 mm.
Air cleaner	A.C. Delco—Dry element	A.C. Delco—Dry element
Strangler control	Manual	Manual
Slow running speed	700—750 r.p.m.	700—750 r.p.m.

‡These settings are for Gazelle R.H.D. and L.H.D. Up to B.706001325 and Minx R.H.D. and L.H.D., Up to B.006004290

†These settings are for Gazelle R.H.D. only, From B.706001326; and Minx R.H.D. only, From B.006004291

Stromberg 150 CD (Twin)

Settings (sea level to 4,000 ft. (1,219 m.)	
Needle type	5M
Spring	Plain (uncoloured) ·032 in. (·812 mm.)
Fast idle gap	(·029 in.) ·75 mm.
Slow running speed	900-950 r.p.m.
Air cleaner	A. C. Delco—Dry element
Strangler control	Manual

COOLING SYSTEM

Type—All models	Centrifugal pump and fan
Pump drive	"V" belt from crankshaft pulley
Thermostat (wax type)—Cast iron head—opens at	190°F (87·8°C)
—Aluminium head—opens at	180°C (82°F)
Radiator—Type	Two row tube
—Relief valve	In filler cap, 9 lbs. in² (·63 kg. cm²)

IGNITION SYSTEM

Type—All models	Coil and distributor
Firing order	1, 3, 4, 2
Ignition control	Fully automatic—vacuum and centrifugal
Ignition timing (nominal) static—All models	6°—10° B.T.D.C. (H.C.)

The above ignition settings may need SLIGHT alteration to meet local fuel requirements. Such adjustments should be made by means of the distributor vernier control, taking care not to over retard or over advance the ignition timing. Timing marks in crankshaft degrees are spaced at 4° intervals on the vernier control and at 5° intervals between the crankshaft pulley pointers or marks.

Centrifugal Advance

Sceptre, Rapier, Vogue

Distributor Despatch No. 41125 or 41151 * *

Advance Curve No. ECM 852

Decelerating on Test rig		Decelerating on engine		
Dist. r.p.m.	Dist. degrees	Crank r.p.m.	Crank degrees	
2600	16°—18°	3500	25°—29°	*
2300	16°—18°	3000	22°—26°	*
2000	14°—16°	2000	16°—20°	*
1000	8°—10°	1500	12°—16°	*
750	6°—8°	1000	1°—3°	*
500	1°—3°	750	0°—½°	*
below 350	No advance	Below 700	No advance	

**The static ignition advance angle must be added to these figures when testing the distributor on the engine. The centrifugal advance is the same for both distributors.*

* **From Chassis Number:* Sceptre *B.132003768*
Rapier *B.325001422*
Vogue *B.774004647*

Vacuum advance for 41125

Hg. in.	Dist. degrees	Crank degrees
15	7°—9°	14°—18°
8	6°—9°	12°—18°
6	2½°—7°	5°—14°
4	0°—2½°	0°—5°
3	0°—½°	0°—1°

No vacuum advance below 2½ Hg.

Vacuum Advance Unit Marking: 4—7—8

Vacuum Advance for 41151

Hg. in.	Dist. degrees	Crank degrees
11	4°—6°	8°—12°
7	3°—5°	6°—10°
5	½°—3°	1°—6°
2½	0°—½°	0°—1°

No vacuum advance below 2 Hg. in.

Vacuum Advance Unit Marking: 4—8—5

Centrifugal Advance

Super Minx, Gazelle and Minx

Distributor Despatch No. 41043A

Advance Curve No. ECM 619

Decelerating on Test rig.		Decelerating on engine	
Dist. r.p.m.	Dist. degrees	Crank r.p.m.	Crank degrees
3000	16°—18°	3500	24°—28° *
2000	13½—15½°	3000	21°—25° *
1300	9°—11°	2000	15°—18° *
700	5½°—7½°	1000	6°—12° *
500	3°—6°	750	0°—6° *
400	½°—3½°	Below 500	No advance
Below 250	No advance		

**The static ignition advance angle must be added to these figures when testing the distributor on the engine.*

Vacuum Advance	Hg. in.	Dist degrees	Crank degrees
	15	6°—8°	12°—16°
	10	4½°—6½°	9°—13°
	8	2½°—4½°	4½°—8½°
	6	0°—2°	0°—4°
	4	0°—½°	0°—1°

No vacuum advance below 2½ Hg."

Vacuum Advance Unit Marking: 5—11—7

Centrifugal Advance

Alpine

Distributor Despatch No. 41077

Advance Curve No. ECM 844

Decelerating on Test rig		Decelerating on engine	
Dist. r.p.m.	Dist degrees	Crank r.p.m.	Crank degrees
1800	12°—14°	3500	24°—28° *
1400	12°—14°	3000	24°—28° *
1000	7½°—9½°	2000	15°—19° *
800	5°—7°	1500	8°—12° *
500	1°—3°	1000	2°—6° *
below 250	No advance	Below 500	No advance

**The static ignition advance angle must be added to these figures when testing the distributor on the engine.*

Vacuum Advance	Hg. in.	Dist. degrees	Crank degrees
	11	4°—6°	8°—12°
	7	3°—5°	6°—10°
	5	½°—3°	1°—6°
	2½	0°—½°	0°—1°

No vacuum advance below 2 Hg."

Vacuum Advance Unit Marking: 4—8—5

—Drive	Skew gear on camshaft
—Direction of rotation (viewed from above)	Anti-clockwise
—Contact breaker gap	·015 in. (·38 mm.)
—Contact lever spring tension	18/24 ozs. (·51/·68 kg.)
—Firing angles	0°, 90°, 180°, 270° ± 1°
—Cam dwell angle	60° ± 3°
Coil—Make and type	Lucas HA.45102
Sparking Plugs—Make and type—Cast iron cylinder head ...	Champion N5
—Aluminium cylinder head ...	Champion N9Y
—Gap (both types)	·025 in. (·635 mm.)

CLUTCH (All models)

Make and type	Borg and Beck diaphragm
Operation	Hydraulic
Driven plate—Diameter	7½ in. (19 cm.)
—Number of springs	Four
—Colour of springs	Light grey
Clutch assembly—Adjustment	On pedal only (See Section D)
—Thrust bearing	Carbon ring
Free movement of withdrawal lever	None (not adjustable)

GEARBOX (All models) (For torque loading figures see end of section)

Type	Four speed, all synchromesh, and reverse
Mainshaft bearings	Front spigot, needle rollers; rear, ball
Layshaft bearings	Needle rollers
Primary shaft bearings	Ball
Reverse gear bearing	Phosphor-bronze bush
Primary shaft spigot bearing	Oilite bush
Adjustment—Mainshaft	None
—Layshaft	Selective assembly
—Layshaft (end float)	·006/·008 in. (·152/·203 mm.)
1st speed wheel end float	·004/·009 in. (·1/·23 mm.)
Overdrive (where fitted)—Ratio	·803 : 1
—Pump pressure	480/500 lbs. in² (33·75/35·15 kg. cm²) approx.
Ratios (All models except Alpine)—Top	1·000 : 1
—Third	1·392 : 1
—Second	2·141 : 1
—First	3·353 : 1
—Reverse	3·569 : 1
Ratios (Alpine)—Top	1·000 : 1
—Third	1·295 : 1
—Second	1·99 : 1
—First	3·12 : 1
—Reverse	3·32 : 1

PROPELLER SHAFT

Rear coupling ... Rubber bush type or plain coupling

	Std.	O/D
Length between centres—Sceptre	—	45·80 in. (116·3 cm.)
—Vogue	48·31 in. (122·7 cm.)	45·80 in. (116·3 cm.)
—Super Minx		
—Rapier	45·55 in. (115·0 cm.)	43·19 in. (109·2 cm.)
—Gazelle		
—Minx		
—Alpine	32·35 in. (81·9 cm.)	29·5 in. (74·9 cm.)

REAR AXLE (All models) (For torque loading figures see end of section)

Type and final drive	Semi-floating, hypoid
Bearings—Hypoid bevel pinion	Taper roller
—Differential and crown wheel assembly ...	Taper roller
—Hub	Ball
Adjustment—Hypoid bevel pinion	Shims
—Differential assembly	Shims
—Crown wheel to pinion (backlash) ...	·005/·009 in. (·127/·229 mm.)
Number of teeth—Crown wheel	38 } 4·22 35 } 3·89
—Pinion	9 } 9 }

	Std. and Automatic	O/D	Estate Cars
Final drive ratio	3·89	4·22	4·22
Overall ratios (All models except Alpine)—O/D Top	—	3·388	—
—Top ...	3·89	4·22	4·22
—O/D Third	—	4·717	—
—Third ...	5·415	5·874	5·874
—Second	8·338	9·035	9·035
—First ...	13·043	14·149	14·149
—Reverse	13·883	15·061	15·061
Overall ratios (Alpine) —O/D Top	—	3·388	
—Top ...	3·89	4·22	
—O/D Third	—	4·388	
—Third ...	5·037	5·465	
—Second	7·741	8·397	
—First ...	12·137	13·166	
—Reverse	13·014	14·010	

For road speed/engine speed r.p.m. figures, see tabulation on page 15

FRONT SUSPENSION

Spring	Outer diameter	Free length Saloon	Free length Estate car
—Sceptre	4·6 in. (11·68 cm.)	10·88 in. (27·6 cm.)	—
—Vogue	4·6 in. (11·68 cm.)	11·17 in. (28·3 cm.)	10·88 in. (27·6 cm.)
—Super Minx	4·6 in. (11·68 cm.)	11·17 in. (28·3 cm.)	10·88 in. (27·6 cm.)
—Rapier	4·56 in. (11·6 cm.)	11·86 in. (30·0 cm.)	—
—Gazelle	4·56 in. (11·6 cm.)	12·75 in. (32·3 cm.)	—
—Minx	4·56 in. (11·6 cm.)	12·75 in. (32·3 cm.)	—
—Alpine	4·47 in. (11·35 cm.)	12·62 in. (32·05 cm.)	—

Steering angles and dimensions

	Castor	Camber	Steering axis inclination	Ackerman angle Inner wheel	Ackerman angle Outer wheel	Toe-in
—Sceptre, —Vogue, —Super Minx	45′±15′ (positive)	30′±15′ (positive)	5°—15′±15′	22°	20°	⅛ in. (3 mm.)*
—Rapier, —Gazelle, —Minx	30′±15′	30′±15′	5°—15′±15′	22°—45′±½°	20°	⅛ in. (3 mm.)*
—Alpine ...	3°—50′	30′±15′	5°—15′±15′	22°—45′±½°	20°	⅛ in. (3 mm.)*

Front hub end float (All models) ... ... ·002/·007 in. (·05/·18 mm.)

**Equivalent to an angle between the wheels of 17′±5′*

All steering angles and dimensions MUST be checked with the car on gap gauges. For full explanation see Section F

BRAKES (For torque loading figures see end of section)

Make	Lockheed or Girling hydraulic
Front brakes—Diameter	10·3 in. (26·1 cm.)
Rear brakes —Drum diameter	9 in. (22·8 cm.)
—Lining width	1·75 in. (44·45 mm.)
—Total lining area	80·5 in² (519·3 cm²)
Access to master cylinder	Under bonnet

Brakes (continued)

	Lining material	
	Front	*Rear*
—Super Minx, —Vogue, —Minx, —Gazelle	Don 55	Don 202
—Sceptre, —Rapier, —Alpine	Mintex M40	Don 24

WHEELS AND TYRES

Wheel—type	Disc or (*wire Alpine only)
—size	13 × 4½
Tyre—size (Standard) Saloons and Alpine	600 × 13 Dunlop C41 Nylon or Rayon Tubeless
(Optional) Sceptre and Alpine	590 × 13 Dunlop RS5 Tubeless
Estates only	650 × 13 Dunlop C41 Nylon or Rayon tubeless
Rolling radius	C41 Nylon 11·64 in. (29·56 cm.)
	C41 Rayon 11·41 in. (28·98 cm.)
	RS5 11·57 in. (29·29 cm.)

**With wire wheels, tyres are fitted with tubes.*

—Pressures—Saloon	
Front and rear	25 lbs. in² (1·75 kg. cm²)
—Estate car	
Front and rear (4 up, including driver)	25 lbs. in² (1·75 kg. cm²)
Front (fully laden)	25 lbs. in² (1·75 kg. cm²)
Rear (fully laden)	30 lbs. in² (2·1 kg. cm²)

For fast driving, particularly when using Motorways which allow lengthy periods near maximum speeds, increase all pressures by 3 lbs. in² (·2 kg. cm²)

STEERING (For torque loading figures see end of section)

Make	Burman "F" or Cam Gear
Type	Re-circulating ball
Adjustment—Rocker arm	Shims

REAR SUSPENSION (For torque loading figures see end of section)

Type — Semi-elliptic

	Number of blades
—Minx, —Gazelle	7
—Vogue and Super Minx Saloon	4
—Vogue and Super Minx Estate car	7
—Sceptre	5
—Rapier	7
—Alpine	6

	Laden camber load	*Laden camber*
—Minx —Gazelle	633 lbs. (301 kg.)	1·25 in. (31·7 mm.) negative
—Super Minx Saloon	398 lbs. (180 kg.)	·42 in. (10·6 mm.) positive
—Vogue Estate car	630 lbs. (286 kg.)	·42 in. (10·6 mm.) positive
—Sceptre	398 lbs. (180 kg.)	·42 in. (10·6 mm.) positive
—Rapier	395 lbs. (179 kg.)	·45 in. (11·0 mm.) negative
Load to be evenly distributed over centre line of rear axle		
—Alpine	165 lbs. (75 kg.)	·70 in. (17·7 mm.) negative
Load to be evenly distributed approx. 20 in. (50 cm.) rearward from centre line of rear axle		

Shock absorbers—Type ... ... Telescopic direct acting

BATTERY

Make and type ... ... Lucas BT.7A—38 amp. hr. @ 10 hr. rating (43 amp. hr. @ 20 hr. rating) or Lucas BT.9A—51 amp. hr. @ 10 hr. rating (certain export territories) (57 amp. hr. @ 20 hr. rating)

System ... ... Negative earth

Voltage 12

Specific gravity reading ... ... See Section N

GENERATOR

Make and type ... ... Lucas C.40.

Drive ... ... "V" belt from pulley on crankshaft

Output control ... ... Current voltage control

Cutting-in speed ... ... 1350 r.p.m. (max.) @ 13 generator volts

Field resistance ... ... 5·9 ohms

Maximum output ... ... 22 amps. @ 2275 r.p.m. (max.) @ 13·5 generator volts and a resistance load of ·49 ohms

CONTROL BOX (For generator)

Make and type ... ... Lucas RB 340

ALTERNATOR (For torque loading figures see end of section)

Type ... ... 10 AC

Nominal voltage 12

Nominal DC output ... ... 35 amps.

Maximum rotor speed ... ... 12,500 r.p.m.

Phase resistance at 68°F (20°C) ±5% ... ... ·164 ohms

Field coil resistance at 68°F (20°C) ±5% ... ... 3·47 ohms

Slip ring brush length—new ... ... $\frac{5}{8}$ in. (1·6 cm.)

—renew at ... ... $\frac{5}{32}$ in. (·4 cm.)

Brush spring test load—at $\frac{5}{16}$ in. (1·98 cm.) ... ... 4 to 5 oz. (·12 to ·14 kg.)

—at $\frac{3}{8}$ in. (1·0 cm.) ... ... $7\frac{1}{2}$ to $8\frac{1}{2}$ oz. (·21 to ·24 kg.)

Warning lamp control ... ... 3 AW

Field isolating relay ... ... 6 RA

Diode test bulb ... ... L.280 12v 1·5w

CONTROL BOX (For alternator)

Make and type	Lucas 4 TR

STARTER

Make and type	Lucas M.35.G
Drive	Lucas "SB"
Control type	Solenoid
Lock torque	9·3 lbs. ft. (1·28 kg.m.) 370/390 amps. @ 7·7/7·3 volts

LAMP BULBS AND LIGHT UNITS

Vogue—	
R.H.D. head	Lucas 54520172 (1A), 54520174 (2A)
L.H.D. head	Lucas 54520172 (1A), 556306 with 410 bulb (50/40W)
France head	Lucas 54520931 (1A), 556307 with 411 bulb (50/40W)
Sweden head	Lucas 54520172 (1A), 54520967 with 410 bulb (50/40W)
Italy head	Lucas 54520172 (1A), 556306 with 410 bulb (50/40W)
N. America	Standard sealed beam unit
Sceptre—	
Head (R.H.D.) outer	Lucas 414 (sealed beam) (60/45W)
inner	Lucas 54520172
Head (L.H.D.) outer	Lucas 410 (45/40W)
inner	Lucas 54520172, 556306 with 410 bulb (50/40W)
Head (France) outer	Lucas 411 (45/40W)
inner	Lucas 54520931, 556307 with 411 bulb (50/40W)
Head (Sweden) outer	Lucas 410 (45/50W)
inner	Lucas 54520172, 54520967 with 410 bulb (50/40W)
Head (Italy) outer	Lucas 410 (45/50W)
inner	Lucas 54520172, 556306 with 410 bulb (50/40W)
Head (North America)	Standard sealed beam units
Super Minx, Alpine, Rapier, Gazelle, Minx—	
R.H.D. head	Lucas 414 (sealed beam unit) (50/40W)
L.H.D. head	Lucas 410 (45/40W)
France head	Lucas 411 (45/40W)
N. America	Standard sealed beam unit
Sidelamp—Minx, —Vogue, —Rapier, —Sceptre	L.222 4W
Sidelamp—Alpine	L.501 5W
Side/Front flashing indicator—Sceptre, —Gazelle, —Super Minx	L.380 21/6W
Side/Front flashing indicator—Vogue, —Rapier, —Alpine, —Minx	L.382 21W
Stop and tail—All models	L.380 21/6W
Rear flasher—All models	L.382 21W

Rear number plate—Super Minx, —Vogue	... ...	L.989 6W (Saloon); L.222 4W (Estate car)
—Sceptre, —Alpine, —Rapier, —Gazelle, —Minx	... ...	L.501 5W
Instruments—Panel—All models	... ...	L.987 2·2W
Interior—Festoon—All models	... ...	L.254 6W
Warning lamps—All models	... ...	Phillips P.12829 2W
Reverse lamp (where fitted)	... ...	L.382 21W

TORQUE LOADING FIGURES

ENGINE

Cylinder head (Cast iron, tighten hot; aluminium, tighten cold)	48 lbs. ft. (6·6 kg.m.)
Crankshaft (mains)	55 lbs. ft. (7·6 kg.m.)
Connecting rod (big end)	24 lbs. ft. (3·3 kg.m.)
Flywheel	40 lbs. ft. (5·5 kg.m.)

GEARBOX

Mainshaft nuts	80 lbs. ft. (11·0 kg.m.) *(For rear nut use Tool No. RG.482 and set wrench to 77lbs./ft. (10·6 kg.m.)*

REAR AXLE

Hypoid bevel pinion nut	110 lbs. ft. (15·2 kg.m.)
Axle shaft nut	180 lbs. ft. (24·8 kg.m.)
Crown wheel setscrews	50 lbs. (6·9 kg.m.)
Differential bearing cap nuts	53 lbs. ft. (7·3 kg.m.)

PROPELLER SHAFT

Universal joint (metal to rubber, where fitted)	50 lbs. ft. (6·9 kg.m.)

FRONT SUSPENSION

Top fulcrum pin to crossmember, mounting bolts	48 lbs. ft. (6·6 kg.m.)
Bottom fulcrum pin to crossmember, mounting bolts	32 lbs. ft. (4·4 kg.m.)
Top swivel bearing to axle carrier	44 lbs. ft. (6·0 kg.m.)
Bottom swivel bearing to axle carrier	60 lbs. ft. (8·2 kg m) minimum
Bottom swivel bearing to bottom link—$\frac{3}{8}$ in U N.F.	26 lbs. ft. (3·5 kg.m.)
—$\frac{1}{2}$ in. U.N.F.	75 lbs. ft. (10·3 kg.m.)
Crossmember to underframe	62 lbs. ft. (8·5 kg.m.)
Road wheel nuts	48 lbs. ft. (6·6 kg.m.)

REAR SUSPENSION

Rear spring "U" bolts—(All models except Alpine)	16 lbs. ft. (2·2 kg.m.)
—(Alpine)	42 lbs. ft. (5·8 kg.m.)

STEERING

Steering box to underframe	30 lbs. ft. (4·1 kg.m.)
Relay lever assembly to underframe	30 lbs. ft. (4·1 kg.m.)
Steering linkage taper pins	30 lbs. ft. (4·1 kg.m.)
Swing lever to rocker shaft	75 lbs. ft. (10·4 kg.m.)

BRAKES

Steering arm to backplate	48 lbs. ft. (6·6 kg.m.)
Backplate to hub	34 lbs. ft. (4·7 kg.m.)
Disc to hub	38 lbs. ft. (5·2 kg.m.)
Bleed screws	6 lbs. ft. (·8 kg.m.)
Union nuts—male	7 lbs. ft. (·9 kg.m.)
—female	9 lbs. ft. (1·2 kg.m.)
Backplate to axle casing	17 lbs. ft. (2·3 kg.m.)

ALTERNATOR

Assembly torque load	—brush box screws	10 lb. in. (·115 kg.m.)
	—diode heat sink fixings	25 lb. in. (·287 kg.m.)
	—"Through" bolts	45 lb. in. (517 kg.m.)
Test torque load	—brush box screws	5 lb. in. (·057 kg.m.)
	—diode heat sink fixings	15 lb. in. (·172 kg.m.)

Torque wrenches in daily use are to be checked at intervals not exceeding three months, to ensure that accuracy is maintained.

COOLING SYSTEM

SECTION A

CONTENTS

COOLING SYSTEM *Page*

—To drain ... 4
—To refill ... 4
—To clean ... 5
—Furred radiator ... 5
—External cleaning ... 5

FROST PRECAUTIONS

—Anti-freeze ... 4
—Heaters ... 4

GENERAL DESCRIPTION ... 3

RADIATOR

—To remove and refit ... 6

THERMOSTAT

—To remove and refit ... 5
—To test—wax type ... 5

WATER PUMP

—To remove and refit ... 7
—To dismantle ... 7
—To reassemble ... 8

WATER TEMPERATURE GAUGE

—To remove element ... 6
—To remove gauge ... See Section N — Instruments to remove
—Temperature reading ... 6

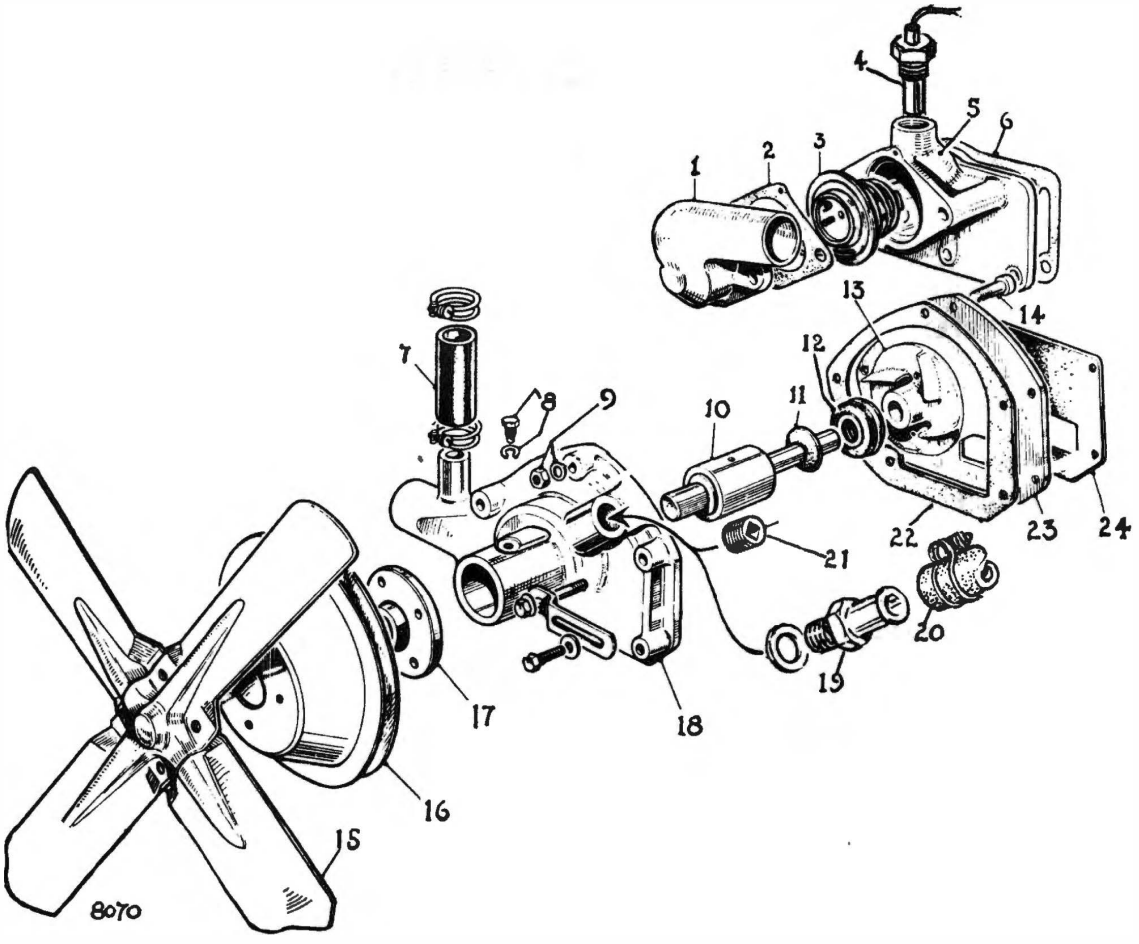

1. WATER OUTLET PIPE
2. GASKET
3. THERMOSTAT
4. THERMOMETER ELEMENT (TRANSMITTER)
5. THERMOSTAT HOUSING
6. GASKET
7. PUMP BY-PASS HOSE
8. BEARING LOCATING SCREW AND WASHER
9. COVER PLATE WASHER AND NUT
10. BEARING UNIT
11. THROWER
12. WATER SEAL
13. IMPELLOR
14. COVER PLATE BOLT
15. FAN BLADES
16. FAN PULLEY
17. FAN PULLEY CENTRE
18. WATER PUMP BODY
19. HEATER HOSE CONNECTOR
20. HEATER HOSE
21. PLUG (CARS WITHOUT HEATER)
22. GASKET
23. COVER PLATE
24. GASKET

Fig. 1. *Exploded view of water pump*

COOLING SYSTEM

Fill with clean rainwater, or softened water, it is preferable to tap water which may contain dissolved lime.

GENERAL DESCRIPTION

The cooling system includes the following main parts: pump, cylinder block water jacket, radiator, bottom and top hoses, thermostat and filler cap.

The impellor type pump is driven by the "V" belt which also drives the generator. The pump is mounted on the front of the cylinder block, and a cooling fan is bolted to the pump drive pulley.

Water circulation, by the pump, is from the radiator, through the bottom hose, into the cylinder block. The water passes round the cylinder barrels and into the cylinder head, then through brass water jets to the valve seats before returning to the radiator through the pump, the thermostat housing and top water hose.

The thermostatically operated valve, located between the pump and the radiator top tank, ensures that when the engine is started from cold it reaches normal working temperature as soon as possible and is then kept at this temperature.

When the engine is cold the thermostat valve is closed, and water from the pump returns to the pump intake through the small bore pump by-pass pipe without passing through the thermostat. There is no circulation through the radiator so the water temperature in the engine rises.

When normal working temperature in the engine water jacket is reached, the thermostat valve will open, water commences to flow through the radiator to maintain this temperature.

Under normal conditions the thermostat will operate to open and close the valve as necessary to maintain normal working temperature.

In conditions of high atmospheric temperature and/or conditions of heavy load the thermostat is capable of opening the valve wide and holding it open to maintain normal working temperature over a wide range of working conditions.

The radiator filler cap houses a spring-loaded pressure release valve which has two functions:—

(*a*) It prevents water loss through the overflow pipe when the water is at normal working level. (See "Cooling System—To refill").

(*b*) The valve maintains a small pressure in the cooling system, so that the water boiling point is raised, this is an advantage at high altitudes and in the tropics.

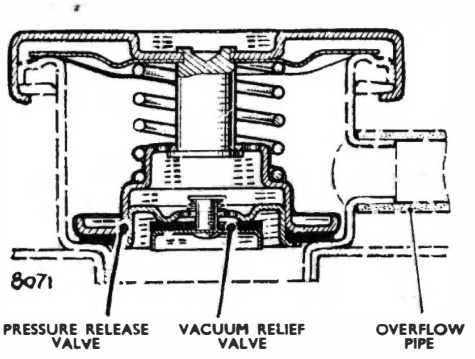

Fig. 2. *Radiator filler cap*

When the cooling system temperature falls a partial vacuum is formed and this operates a vacuum relief valve which is built into the pressure release valve. This permits the re-entry of air through the overflow pipe.

See "General Data—Cooling System" for:—

Thermostat operating temperatures

Pressure release valve pressure.

FROST PRECAUTIONS

In frosty weather without anti-freeze in the cooling system the following precautions should be taken to avoid serious damage:—

(*a*) Drain the system whenever the car is left for any length of time, ensure that system is fully drained, i.e., that taps are not blocked. Also see subheading "Heaters".

(*b*) In very cold weather ensure radiator is warm before driving the car and ensure that temperature is maintained during journey. The bottom of the radiator, especially the bottom tank should be protected.

(c) When filling radiator use WARM, NOT boiling water, and pour in slowly.

Anti-freeze

To protect the system whilst the vehicle is stationary and whilst being driven in very cold weather it is recommended that an inhibited ethylene glycol anti-freeze mixture is used in the quantities recommended in the table below.

Anti-freeze to B.S.3151 or B.S.3152

Solution strength	Against frost damage	Safe pump circulation
25%	—15°F (—26°C)	10°F (—12°C)
30%	—28°F (—33°C)	3°F (—16°C)
35%	—38°F (—39°C)	—4°F (—20°C)
40%	—42°F (—41°C)	—10°F (—23°C)
50%	—53°F (—47°C)	—32°F (—36°C)

Anti-freeze mixtures based on alcohol are not suitable as loss of anti-freeze will occur by evaporation.

Before putting anti-freeze into the cooling system the cylinder head should be checked for tightness, as any leakage of anti-freeze into the engine sump may cause engine seizure and resultant serious damage. See "General Data" for cylinder head nut torque figures, do not overtighten. Due to the searching effect of anti-freeze, hoses, hose connections and all cooling system joints should also be inspected and tightened if required.

When filling system take care to avoid spillage and if anti-freeze is spilt, flush away with clean water.

When the cooling system is filled with anti-freeze a label should be attached to the radiator header tank to indicate the fact and date of filling.

The following precautions are then necessary:—

(*a*) Never overfill the header tank. See "Cooling System—To refill". Leave space for natural expansion and top up when warm.

(*b*) If the cooling system has to be emptied, run the mixture into a clean container and use again.

(c) Whenever the system requires topping up, use the correct strength of mixture.

(*d*) When the anti-freeze is withdrawn and the system is filled with water, REMOVE THE ANTI-FREEZE LABEL ON THE HEADER TANK.

Heaters

Where a heater unit is installed a reliable anti-freeze mixture MUST BE USED, as when the system is drained a small amount of water remains, sufficient to damage the heater if it freezes.

When refilling the cooling system it is essential to have the water control valve full open, to prevent airlocks in the system. The water control valve is operated by the Heat and Car lever, which should be set to the HOT position.

If necessary release the upper hose clip at the heater and expel air, retighten hose clip and top up radiator.

COOLING SYSTEM

To drain

Remove the radiator filler cap.

If a heater is fitted set the heat control to HOT.

Open drain tap in bottom tank of radiator.

Open drain tap on the left-hand side of cylinder block. On "Alpine" cars the cylinder block drain tap is mounted on the left-hand front engine support bracket.

If the system contains anti-freeze drain into a clean container, if required for re-use.

To refill

If heater fitted, set heat control to hot.

Close radiator and cylinder block drain taps.

Whenever possible use clean soft water rather than hard water containing lime in solution. Clean rainwater may be used.

Pour water in slowly to avoid airlocks.

After refilling, run engine for a short time and check externally for leakage.

Top up, if necessary, *to normal running level of radiator—about one inch below bottom of filler neck*. Do not overfill.

To clean

Periodically the cooling system should be cleaned, this is most necessary when hard water having a high lime content has been used.

Proceed as follows:—

Remove the radiator filler cap.

Open, or better, remove drain taps in base of radiator and left-hand side of engine, when engine is still hot.

Allow time for engine to cool after water has drained off.

When cool, insert hose in radiator filler neck and flush radiator to remove loose sediment.

Close or refit drain taps.

Fill system to normal level with a reliable brand of cleaning solution (*solutions containing caustic soda must not be used*) and run the engine as directed by the makers of the solution.

Cleaning solutions may have an injurious effect on paintwork. Use with care.

Drain cleaning solution as soon as recommended period is over. This is important.

Using hose, flush system thoroughly.

Close drain taps and fill with clean soft water or anti-freeze mixture as required.

Furred radiator

If lime deposits are allowed to dry out they set hard and will not soften again. The radiator soon becomes unserviceable. So when a radiator is removed from a vehicle and found to be "furred" the following precautions are necessary.

Keep the radiator in its normal upright position to prevent sediment from the bottom tank entering cooling ducts.

Clean radiator immediately whilst still wet inside. Alternatively seal radiator and fill with water or immerse in suitable tank of water pending treatment, but keep radiator in upright position.

External cleaning

In very dusty conditions or where insects are numerous, the radiator tube system should be kept clean by blowing with compressed air from the engine side.

THERMOSTAT

To remove and refit

The thermostat housing is at the front end of the cylinder head.

Drain radiator to below thermostat level.

Disconnect water hose from water outlet pipe (Fig. 1, item 1).

Remove two nuts holding water outlet pipe to thermostat housing.

Remove water outlet pipe and lift out thermostat.

When refitting a new joint should be used between the water outlet pipe and the thermostat housing.

The thermostat must be fitted with the "jiggle" pin at the 12 o'clock (top) position.

To test—Wax type

Examine the thermostat to ensure that riveted and soldered joints are secure.

Ensure that jiggle pin is in position and free to move.

Inspect for signs of wax escaping from top of element.

Plunge the thermostat into boiling water (at sea level 210°—212°F (98·9°—100°C)). Suspend so that thermostat does not touch the container, and its operation is not obstructed. After three minutes at this temperature the thermostatic valve will be open approximately ¼ in. (6 mm.).

If it is necessary to conduct the above test at an altitude well above sea level, place the thermostat in a 50/50 glycerine water mixture and raise to 211°F (99·4°C) using an accurate thermometer. This glycerine/water mixture boils at sea level at 226°F (107·8°C) and so enables this test to be carried out up to altitudes of 8,000 ft. above sea level. Save the glycerine/water mixture for re-use.

Examine valve seating whilst valve is open, if necessary, carefully remove any foreign matter that would hold valve open. It is not recommended that the valve is opened by hand.

Remove thermostat from hot water and submerge in cold water (approximately room temperature). Valve must reseat securely in 15—20 seconds.

If thermostat operates as describe above, its starting temperature may be taken as being correct without further test. If the thermostat fails to pass any stage of test, a replacement thermostat of correct rating must be fitted. See "General Data—Cooling System". The nominal operating temperature of the thermostat is stamped on the base of the element.

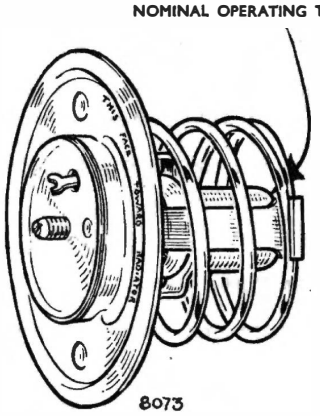

Fig. 3. *Thermostat*

If a replacement thermostat is not immediately available, *the faulty unit should be left out as it could cause serious overheating.* Do not attempt rectification or resetting, this is a specialist's work.

WATER TEMPERATURE GAUGE

This is an electrical instrument made up of a temperature sensitive element (transmitter) in the thermostat housing and a gauge or indicator in the instrument panel.

These units are connected to an instrument voltage regulator and only record the temperature when the ignition is switched on. The instrument voltage regulator is mounted behind the instrument panel.

To remove element

Drain radiator to below thermostat housing level.

Disconnect battery.

Remove the lead from element terminal.

This lead between element and gauge must never short to earth as this would burn out the instrument winding. If it is necessary to reconnect the battery whilst this lead is disconnected, first insulate the lead. Always disconnect battery whilst working on lead.

Unscrew and remove element.

To remove gauge or indicator

See "Section N—Instruments to remove".

Temperature reading

A reasonably accurate reading will be dependent upon a satisfactory battery performance, also upon the satisfactory operation of the instrument voltage regulator, and senitive element (transmitter).

See "Section N—Instruments", to check the gauge.

RADIATOR

To remove and refit

Drain cooling system.

Disconnect top and bottom water hoses.

Remove fixing bolts that secure radiator to baffle plates.

Replacement is made in reverse order. Fixing bolts and their cage nuts should be lubricated with grease to prevent rusting of the bolt threads.

WATER PUMP

To remove

Drain cooling system.

Disconnect bottom hose at the pump end.

Slacken by-pass hose at its upper connection.

Disconnect heater-hose (if fitted).

Loosen dynamo mounting and adjustment bolts.

Remove driving belt.

Remove the four setscrews and spring washers securing the fan blade assembly and withdraw fan, and driving pulley.

Remove the four bolts securing pump to cylinder block.

The pump can now be withdrawn.

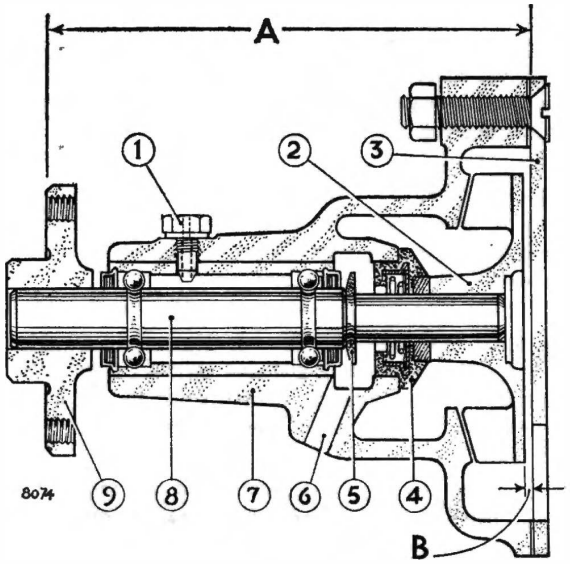

A. 4·875/4·865 in. (123·8/123·6 mm.)
B. 0·04 in. (1·02 mm.)
1. BEARING LOCATING SCREW
2. IMPELLOR
3. BACK COVER PLATE
4. SEAL UNIT
5. THROWER
6. DRAIN HOLE
7. PUMP BODY
8. BEARING ASSEMBLY
9. FAN PULLEY CENTRE

Fig. 4. *Sectional view of water pump*

To refit

Use the removal procedure in the reverse order. The following are additional requirements.

Fit new gaskets which should be lightly smeared with grease to ensure leakproof joints.

Ensure that the countersunk bolt securing the rear cover plate is firmly in position before installing the pump.

Renew any faulty water hoses.

If a new pump is being fitted, transfer by-pass hose and heater connection from old pump before installation.

When replacing the driving belt, adjust it so that there is $\frac{5}{8}$ in. (16 mm.) belt slackness in the centre of the longest run.

To dismantle

A sectional view of the water pump is shown in Fig. 4. The impellor and fan pulley centre are a press fit on the pump spindle which forms part of the bearing unit.

The bearing unit is lubricated in manufacture and there is no provision for lubrication in service. It is important not to wash the pump in petrol (gasoline), paraffin (kerosene) or other cleaning fluids as these would enter the bearing and destroy the lubricant. Cleaning of the pump body should be left until the pump is dismantled.

The pump should be dismantled in the following manner:—

Remove bearing locating screw, see Fig. 4, item 1, and the countersunk bolt and nut holding the back cover plate. Remove cover plate and its paper joint.

Support pump body and press the spindle from the impellor end. This will bring the impellor against the pump body and allow the spindle to be pressed out of the impellor and housing, leaving the water seal in position.

Lift the water seal out of the pump body.

Remove thrower from spindle, examine the spindle and bearing unit. If the bearing shows signs of wear or roughness when rotated, the fan pulley centre should be supported on its underside and the spindle pressed out, and the bearing unit renewed.

Clean the pump body and inspect. If there are signs of wear or deterioration in the bearing bore, or to the face opposite the impellor blades the housing should be renewed.

The water seal has a carbon face mounted in a rubber housing. This face is spring-loaded against the machined front face of the impellor. These parts should be renewed if worn. If the pump leaks, renew the seal.

It is important that the front face of the impellor in contact with the carbon face of the seal, is smooth and square to the spindle axis.

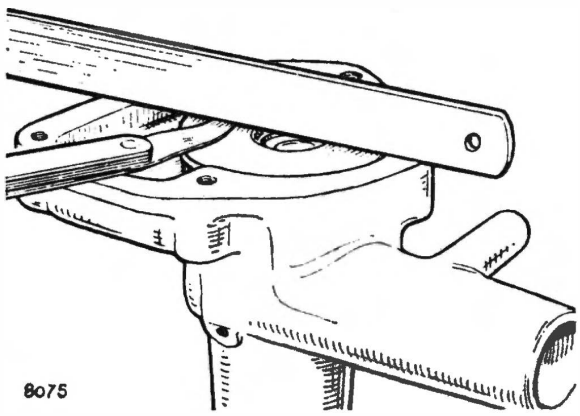

Fig. 6. *Checking clearance between impellor and pump body face plane*

To reassemble

Place the bearing unit in the pump body with the larger diameter of the spindle to the front of the housing. Line up the locating hole in the bearing with the threaded hole in the pump body.

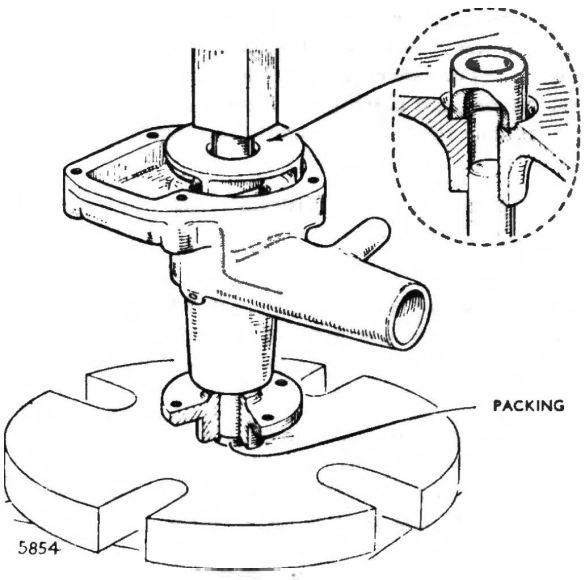

Fig. 5. *Pressing the impellor on to the pump spindle*

Replace the bearing locating screw in the top of the pump body.

Place the fan pulley centre on a press table and press the spindle into the pulley centre until the front face of the pulley is positioned as shown by dimension "A" in Fig. 4. This ensures the correct alignment of the fan pulley to the crankshaft pulley.

Place the thrower disc in its groove on the spindle between the bearing and seal unit as shown in Fig. 4, item 5.

Place the water seal on the smaller diameter of the spindle with the carbon face towards the back face of the water pump and push the seal firmly into the housing. See Fig. 4, item 4.

Support the pump spindle inside the fan pulley centre on a packing as shown in Fig. 5 and press the impellor on to the shaft until the impellor is in the position shown in Fig. 4, dimension "B". This clearance can be checked with feelers and straight edge as shown in Fig. 6.

Fit cover plate using a new joint and secure with the countersunk bolt and nut in the uppermost hole.

ENGINE

SECTION B

CONTENTS

Page

ENGINE DIFFERENCES 8

ADJUSTMENTS
—Sparking plugs — see under Ignition System 37
—Contact breaker points — see under Ignition System 37
—Ignition timing — see under Ignition System 37
—Valve rocker clearance 9
—Generator or alternator belt tension 8

BIG END BEARINGS
—To renew 26

CAMSHAFT
—To remove and refit 26
—To renew bearings 26
—Endfloat 26

CLOSED CRANKCASE VENTILATION SYSTEM
—Description 33
—Operation 33
—Servicing 33
—Regulator valve cleaning 33
—Regulator valve testing 34
—Connection hoses 34
—Flame trap 34

CLUTCH PILOT BEARING — see flywheel centre bearing 33

COMPRESSION PRESSURES 19

CRANKSHAFT
—End float 32
—To remove 32
—To refit 32
—Regrinding 32

CYLINDER BLOCK
—Cylinder bore grading system 29
—To rebore 30
—Replacement cylinder blocks 30
—Cylinder liners — to fit 31
—Cylinder liners — to renew 31

Page

CYLINDER HEAD
—To remove .. 18
—To refit .. 18
—Gaskets .. 18
—Retightening cylinder head bolts .. 19
—Valve seat inserts .. 23

DECARBONISING .. 19

EXAMINATION OF VALVES, VALVE SPRINGS AND VALVE GUIDES .. 20

EXHAUST MANIFOLDS
—To remove and refit .. 17

ENGINE
—To remove .. 34 & 35
—To refit .. 35 & 36

FLYWHEEL
—To remove and refit .. 32
—Centre bearing — to renew .. 33
—Flywheel ring gear — to renew .. 33

GENERATOR OR ALTERNATOR BELT — to adjust .. 8

IGNITION SYSTEM .. 37

INLET AND EXHAUST MANIFOLD
—To remove—all types .. 17
—To dismantle and reassemble .. 17
—To refit—all types .. 17

LUBRICATION SYSTEM — description .. 11

MAIN BEARINGS
—To remove and renew .. 31

OIL COOLER — description .. 12

OIL PRESSURE — reason for low pressure .. 14

OIL DILUTION — reasons .. 14

OIL FILTER
—Description .. 12
—By-pass valve .. 13
—Changing .. 13

OIL PUMP
—Intake filter — position .. 15
—Intake filter — cleaning .. 15
—To remove .. 15
—To dismantle and check clearance .. 16
—To refit .. 16

OIL PRESSURE RELIEF VALVE .. 12

Page

OIL SUMP — to remove and refit 14

PISTONS AND CONNECTION RODS
—Removal and refitting .. .. 26 & 27
—Gudgeon pin — to remove and refit 27
—Gudgeon pin — fit 28
—Connecting rod alignment 28

PISTONS
—Grading system 29
—Fitting new pistons 30

PISTON RINGS
—Details and fitting .. .. 28 & 29

PUSH RODS
—Removal and refitting 18

REMOVAL — see Engine, to remove 34

ROCKER COVER — to remove and refit 8

ROCKER SHAFT ASSEMBLY—to remove, dismantle, reassemble and refit 17

SPARKING PLUGS — see under Ignition System 37

SUMP — to remove and refit — see oil sump 14

TAPPETS OR CAM FOLLOWERS — to remove and refit 24

TIMING COVER AND TIMING CHAIN TENSIONER
—To remove 24
—To refit 24

TIMING WHEEL AND CHAIN
—To remove 24
—To refit 25

VALVES
—Adjusting rocker clearances 9
—Removing 20
—Examination of valves, springs and guides 20
—Refacing 21
—Seating, to recut, seating widths, and position 22
—To grind in 21
—To refit 21

VALVE GUIDES — to renew 22

VALVE SEAT INSERTS — to fit or renew 23

VALVE TIMING — check timing chain replacement 25

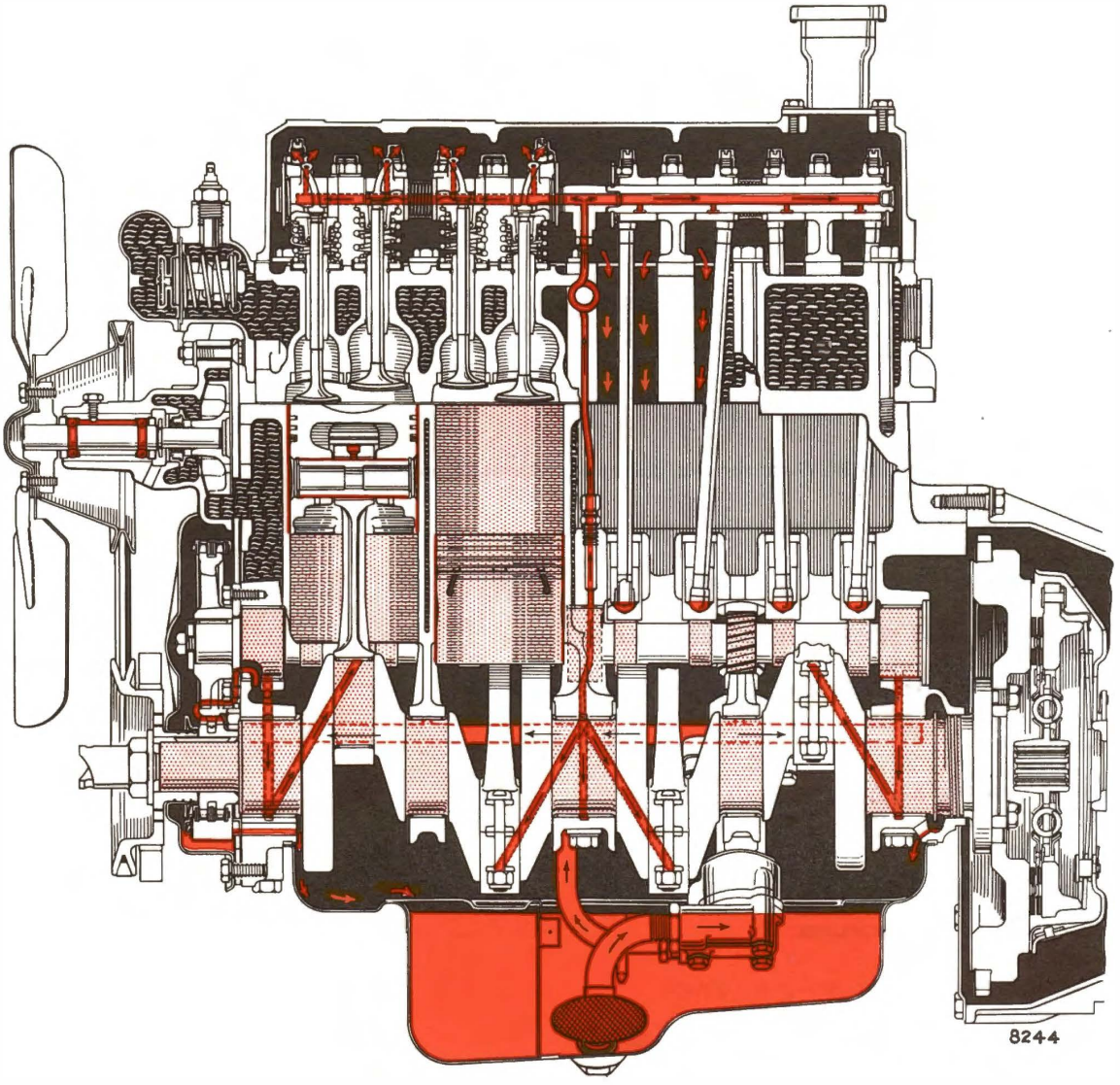

Fig. 1. *Engine—Longitudinal section of engine with aluminium cylinder head.*

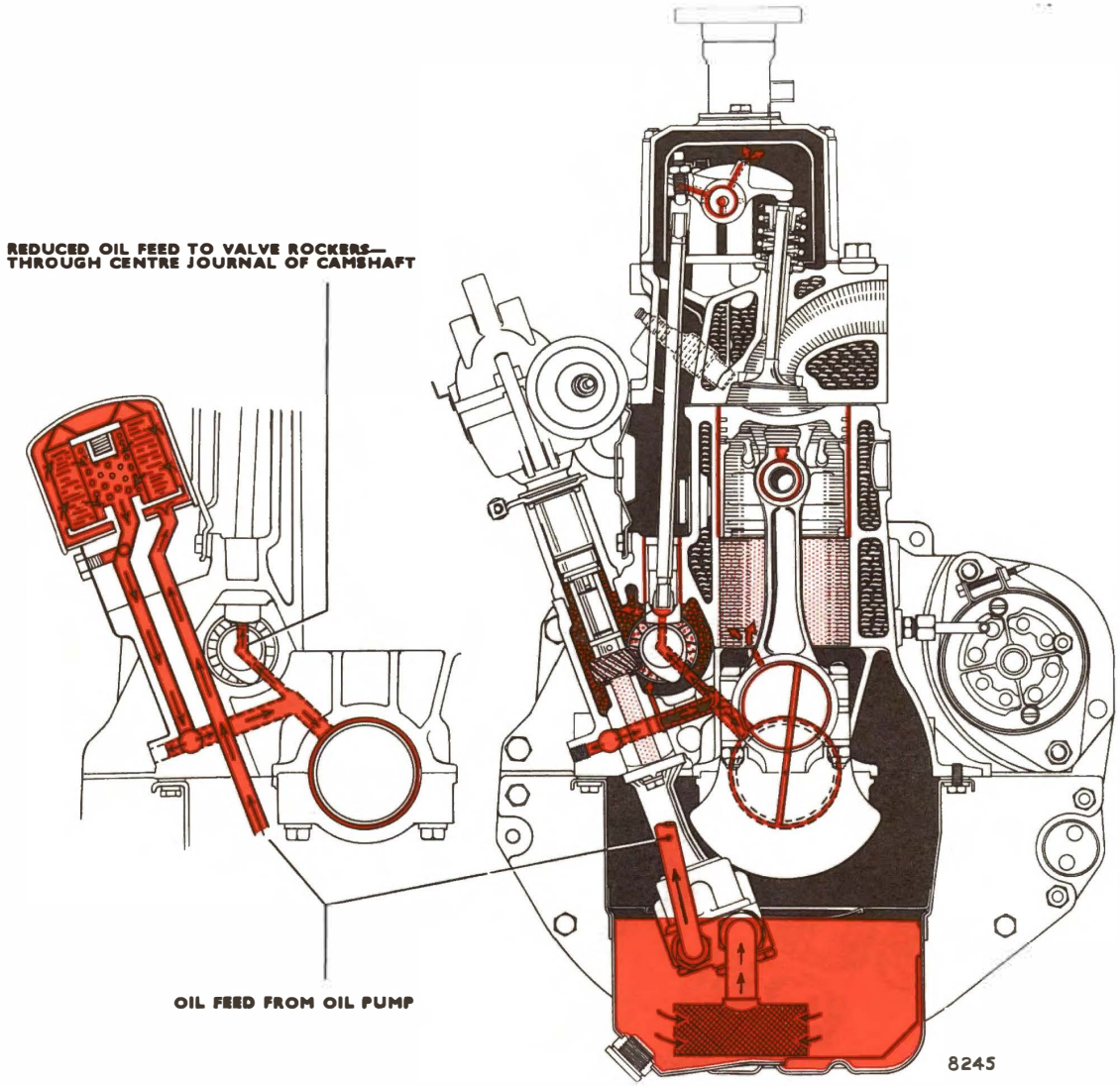

Fig. 2. *Engine—Cross section of engine with aluminium cylinder head.*

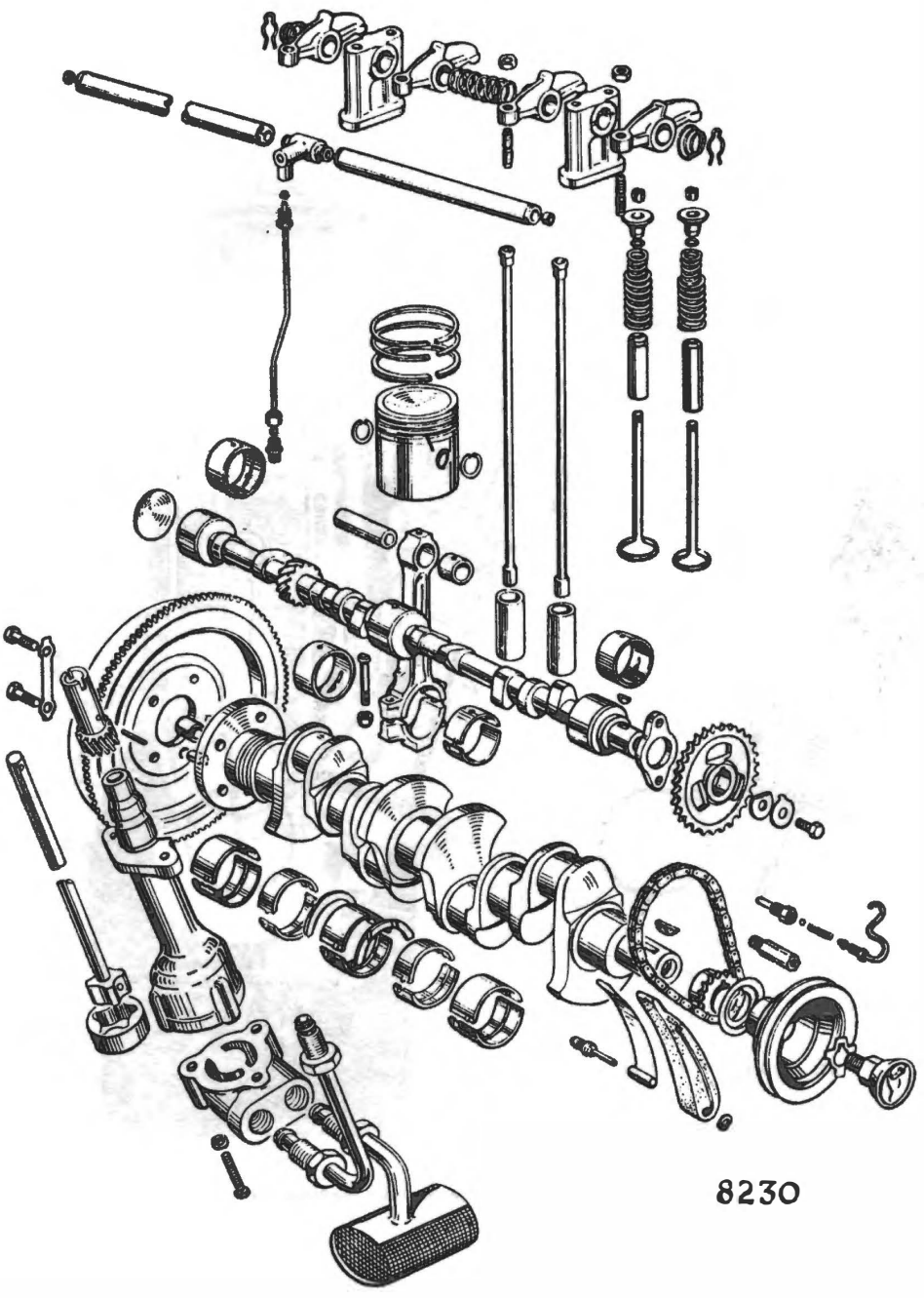

Fig. 3. *Exploded view of working parts—engines with cast-iron cylinder heads.*

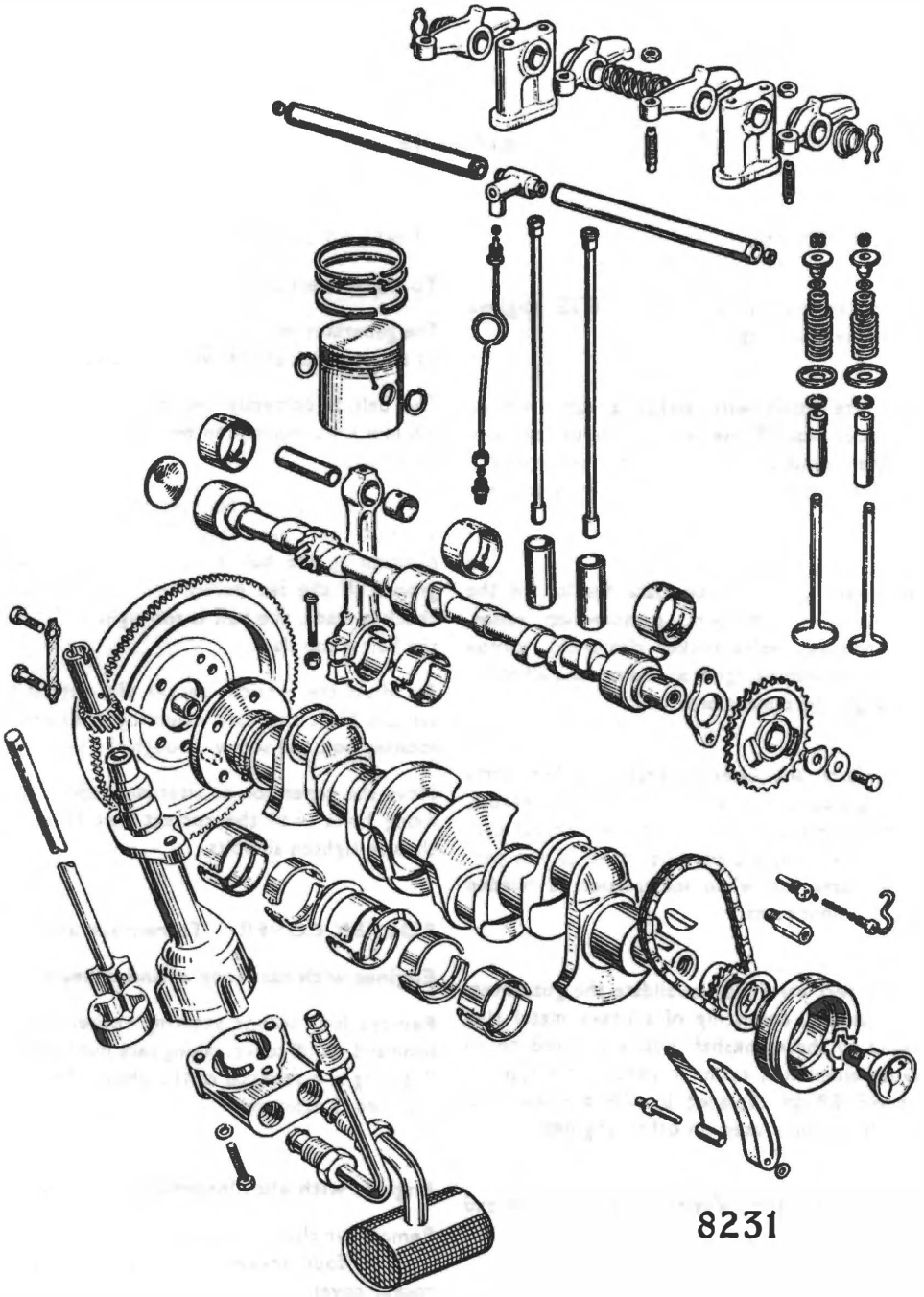

Fig. 4. *Exploded view of working parts—engines with aluminium cylinder heads.*

ENGINE

ENGINE DIFFERENCES

This section covers the entire range of '1725' engines which have five main bearings.

These engines are fitted with either a cast iron or aluminium cylinder head. Those with aluminium cylinder heads have higher compression ratios and in consequence give a higher output than the engines fitted with cast iron cylinder heads.

Full particulars are given in the Data Section of the different engine power outputs, compression ratios, compression pressures, valve rocker clearances, torque spanner settings, clearances, ignition timing, and all other necessary settings and dimensions.

Some engine parts are interchangeable, other parts although looking exactly similar are not interchangeable, and it is most important to ensure that the correct part is fitted. Reference should always be made to the particular vehicle parts list when information is needed regarding replacement parts.

The use of incorrect parts may invalidate the guarantee. A crankshaft damper, consisting of a heavy metal ring rubber bonded to the crankshaft pulley is fitted on all engines having aluminium cylinder heads. This type of pulley must NEVER be replaced by the pressed steel type of crankshaft pulley used on other engines.

All information on the ignition system is given at the end of this section.

A longitudinal section, and cross section of the engine are shown in Figs. 1 and 2. Exploded views of the working parts are shown in Figs. 3 and 4.

GENERATOR OR ALTERNATOR

To adjust belt tension

The generator or alternator is driven from the crankshaft by a belt which also drives the water pump and fan.

The belt is correctly tensioned when a total of $\frac{5}{8}$ in. (16 mm.) movement can be obtained on the longest run of the belt.

In this condition the fan blades can be just moved BACKWARDS by hand against their normal direction of rotation as the belt slips firmly in the fan pulley vee groove. If the fan pulley will not just slip, when this check is made, the belt is too tight and if it moves easily the belt is too slack.

To adjust the tension, slacken the nuts and bolts at the bottom front and rear mounting positions, and the link locating bolt and screw through the slot in the trap.

Move the generator or alternator about its bottom two fixing bolts until the correct belt tension is obtained, then re-tighten all bolts.

ROCKER COVER — To remove and refit

Engines with cast iron cylinder heads

Remove four screws securing rocker cover to cylinder head and lift off cover, taking care not to damage the joint. Refitting is a reversal of the above. The joint should be replaced if damaged.

Engines with aluminium cylinder head

Remove air cleaner assembly.
Remove four rocker cover securing nuts and lift off rocker cover.

Refitting is a reversal of this procedure and a new joint should be fitted.

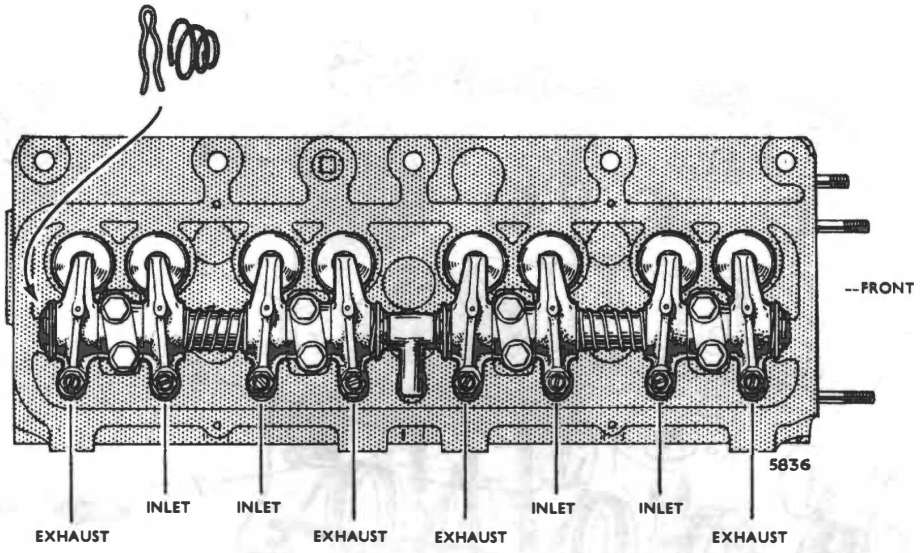

Fig. 5. *Valve rockers—engines with cast-iron cylinder heads.*

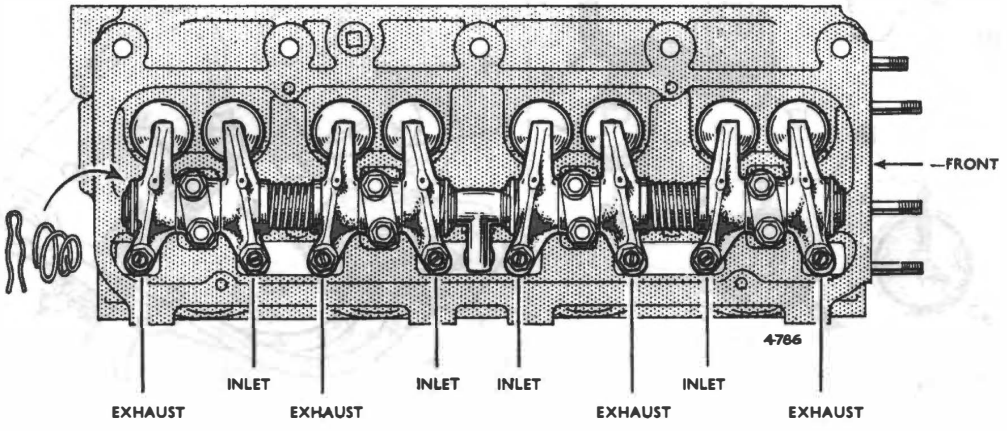

Fig. 6. *Valve rockers—engines with aluminium cylinder heads.*

VALVE ROCKER ADJUSTMENT — all engines

(See Figs. 5 and 6.)

These adjustments are made when the engine is VERY HOT. The valve rocker clearances are given in the Data Section under "Valves."

Remove rocker cover.

Turn the engine until the exhaust valve of No. 4 cylinder is fully open and, starting at this point, adjust valves in the order following, turning the engine progressively through two revolutions to complete the cycle of adjustment.

Adjust No. 1 exhaust with No. 4 exhaust fully open

Adjust No. 2 inlet with No. 3 inlet fully open

Adjust No. 3 exhaust with No. 2 exhaust fully open

Adjust No. 1 inlet with No. 4 inlet fully open

Adjust No. 4 exhaust with No. 1 exhaust fully open

Adjust No. 3 inlet with No. 2 inlet fully open

Adjust No. 2 exhaust with No. 3 exhaust fully open

Adjust No. 4 inlet with No. 1 inlet fully open

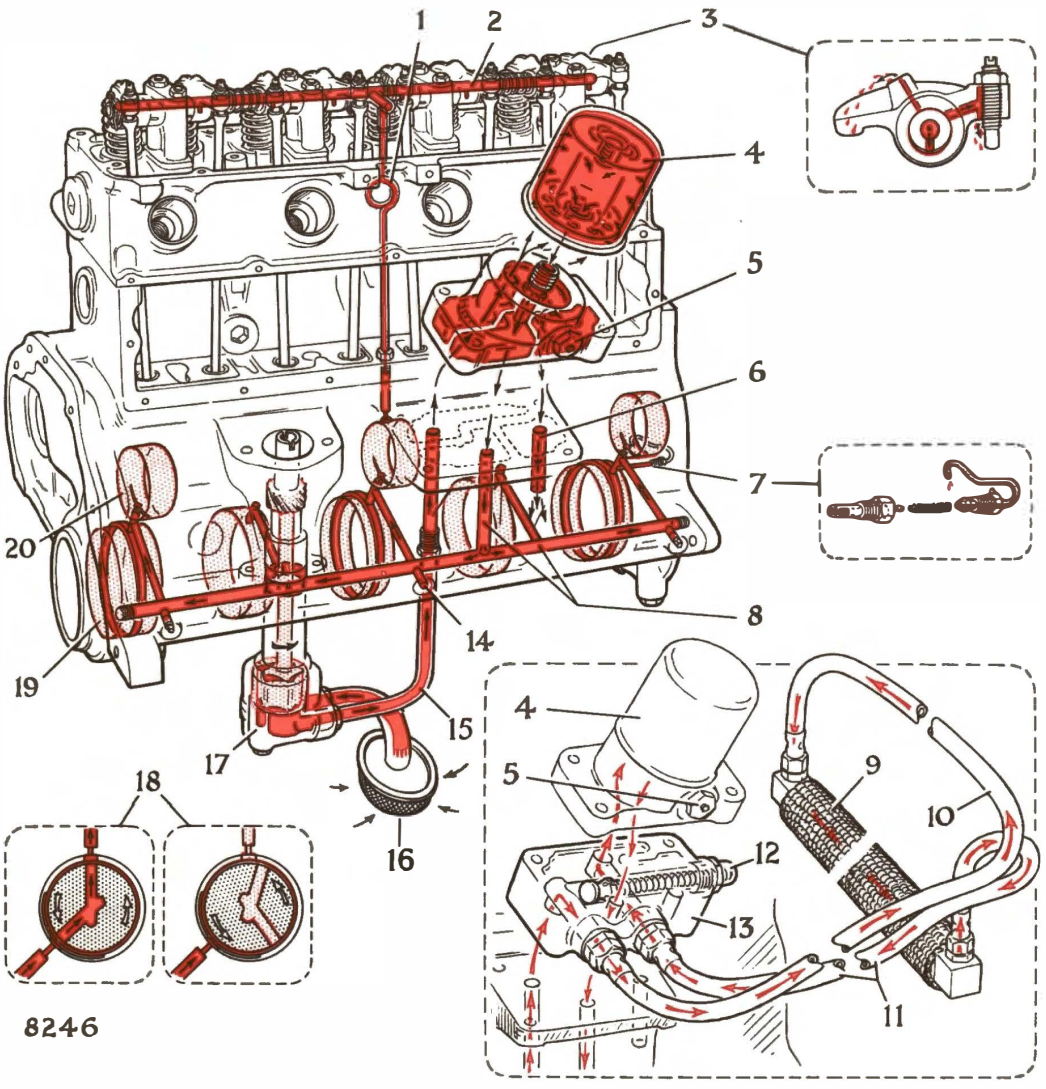

1. OIL FEED PIPE TO VALVE ROCKER SHAFT
2. VALVE ROCKER SHAFT OILWAY
3. VALVE ROCKER OILWAYS
4. FULL FLOW OIL FILTER
5. OIL PRESSURE RELIEF VALVE
6. OIL PRESSURE RELIEF VALVE DISCHARGE HOLE
7. OIL FEED TO TIMING CHAIN FEED PIPE AND NON-RETURN VALVE
8. FEED FROM FULL FLOW OIL FILTER AND OIL GALLERY

*9. OIL COOLER

*10. OIL COOLER FEED PIPE

*11. OIL COOLER RETURN PIPE

*12. OIL COOLER BY-PASS VALVE

*13. ADAPTOR BLOCK—USED BETWEEN OIL FILTER BASE AND CYLINDER BLOCK WHEN OIL COOLER IS FITTED

14. CONNECTION POINT FOR OIL PRESSURE WARNING LIGHT SWITCH OR OIL PRESSURE GAUGE
15. OIL FEED FROM OIL PUMP TO OIL FILTER
16. OIL PUMP INTAKE GAUZE FILTER
17. OIL PUMP
18. CROSS SECTION THROUGH CAMSHAFT CENTRE JOURNAL—SHOWING DRILLING USED TO CONTROL OIL FEED TO ROCKER SHAFT
19. MAIN BEARING
20. CAMSHAFT BEARINGS

*THESE PARTS ARE ONLY USED WHEN AN OIL COOLER IS FITTED

NOT SHOWN—OIL FEED GROOVE, ON OUTSIDE OF PUMP BODY BELOW GEAR. THIS GROOVE FEEDS OIL TO OIL PUMP GEAR.

Fig. 7 *Oil passageways in cylinder block, cylinder head, and oil cooler, if fitted.*

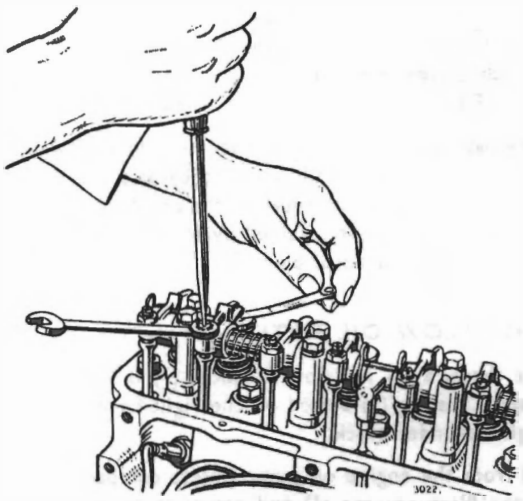

Fig. 8. *Adjusting valve clearances.*

To check clearance, insert a feeler gauge of correct thickness between the valve stem and rocker foot as shown in Fig. 8.

When the rocker clearance is correct the feeler will be firm, but not tight, to move between the rocker and valve stem end, while pushing downwards on the adjustment screw slot with a screwdriver.

To adjust clearance, slacken lock nut and turn screw with screwdriver until correct clearance is obtained. Tighten lock nut and re-check clearance. Check all valves in this manner, then refit rocker cover.

LUBRICATION SYSTEM

General Description

The lubrication system is shown in red in Figs. 1 and 2. Fig. 7 shows the lubricating system and passages in more detail.

Lubrication of all working parts of the engine is effected by the forced feed system, pressure being generated by a submerged oil pump, mounted in the right hand side of the crankcase, and driven, in tandem with the distributor, through skew gears from the camshaft.

Oil is drawn through a submerged gauze filter and rises through the intake tube and oil pump to an internal delivery pipe, whence it is fed to the full flow filter, before passing to the main oil gallery, situated along the right hand side of the crankcase.

From there the oil is distributed into the oilways, drilled in the main bearing support webs of the cylinder block, whence the oil is carried to all main and camshaft bearings. Drilled passages in the crankshaft allow oil to flow from the main bearings to the crankpins, where it lubricates the connecting rod big end bearings.

Oil squirt holes drilled through the big end bearings and connecting rod webs project oil on to the cylinder walls at each revolution of the crankshaft, thus ensuring adequate lubrication of the bores.

The timing gears and chain are lubricated by a jet of oil from a small hole drilled in the side wall of a small diameter pipe which is supplied with oil from the front main bearing oil feed. The oil pipe end passes through a hole in the cylinder block, and oil supplied in excess of the chain's requirements is returned direct to the sump.

The reason for this design is that the diameter of the oil pipe is thus larger than would be possible if it were designed to supply just sufficient oil for the chain's requirements. The advantage of this larger pipe is that blockage is less likely to occur should the oil become contaminated.

The feed end of the timing chain oil feed pipe is connected to a special union, screwed into the drilling (7) shown in Fig. 7. In the union there is a small spring-loaded non-return ball valve which prevents oil draining from the gallery when the engine is stopped. This ensures a very rapid build up of oil pressure directly the engine starts, and oil to flow past the non-return valve as the strength of its return spring is such that it allows the ball valve to lift off its seating whenever the engine is running.

The tappets are lubricated by oil draining back from the valve-operating mechanism.

A pressure relief valve is situated in the forward end of the oil filter body casting. This valve allows a proportion of the circulated oil to return direct to the sump when the pump pressure exceeds the normal pressure given under "Lubrication System" in the Data Section. Fitted into the upper end of the oil filter is a by-pass valve, which opens in the event of the oil filter element becoming choked, thus ensuring a supply of oil to the bearings and other vital parts in such circumstances.

The oil feed to the valve rocker gear is taken from the centre camshaft bearing through a drilling in the centre camshaft journal which acts as a rotary metering device. Oil flow occurs once every camshaft revolution when the

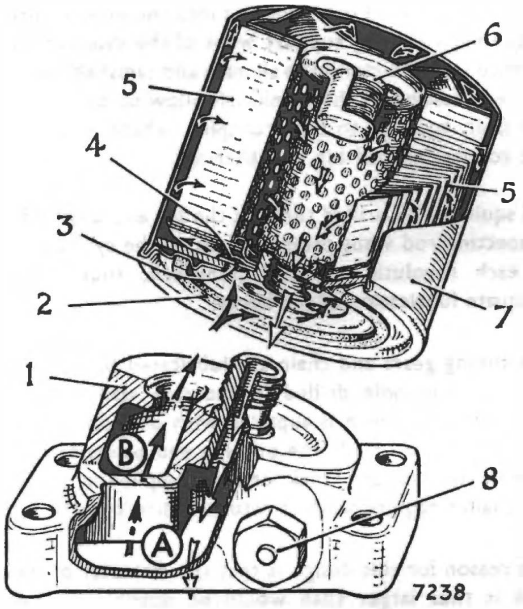

Fig. 9. *Throw away type oil filter—internal details.*

drilling in the camshaft journal connects the centre camshaft bearing oil feed hole, and the oil hole feeding to the valve rocker oil feed pipe. See Fig. 7 and its insert (18). By this means a controlled quantity of oil is fed at a much reduced pressure through an internal pipe to the valve rocker shaft.

Holes in the underside of the rocker shafts feed to each rocker bearing. Grooves in the rocker bearing surface pass oil to drillings in the rockers which feed oil to the push rod cup ends and valve rocker ends that contact the valve stems. Oil from the push rod cup ends overflows and runs down the push rods to lubricate the bottom ends of the push rods in the tappets. Drain holes in each tappet are provided to prevent the tappets from filling with oil.

Oil Cooler—see Fig. 7

If fitted, the oil cooler radiator, is mounted in front of the lower tank of the car radiator, and is connected by two flexible high pressure holes to an adaptor block, bolted between the oil filter base and cylinder block mounting face.

The oil flow to and from the oil cooler is as follows.

1. All oil supplied by the oil pump passes to the rear union on the side of the adaptor block, and to the oil cooler by a flexible high pressure hose.
2. The cooled oil passes from the oil cooler outlet by the other flexible high pressure hose to the front union on the side of the adaptor block, and then by an internal drilling to the oil filter base. From here the remainder of the oil circuit is similar to that shown in Fig. 7.

A by-pass valve, situated in the adaptor block between the inlet and outlet ports allows oil to by-pass the oil cooler when a pressure exists between the ports. This valve and its loading spring are retained by the domed nut on the front end of the adaptor block.

FULL FLOW OIL FILTER—see Fig. 9

The throw away full flow oil filter (7) is screwed to an adaptor casting (1) bolted on the right-hand side of the engine cylinder block.

Oil from the engine oil pump enters compartment "B" in the filter adaptor (1) and passes through eight port holes into the filter body. All oil entering the filter passes through the filter cartridge from the outside to the centre as shown in Fig. 9 and thence through the screwed spigot to compartment "A" in the adaptor casting. From here it enters the engine main oil gallery.

The entry ports on the underside of the filter are shrouded by a flexible anti-drain valve (3) and (4) which prevents the filter from draining during standstill periods.

The throw away filter unit must be changed at the recommended periods given in the "Owner's Handbook".

Oil pressure relief valve — See Fig. 10

A piston type relief valve, situated in compartment "C" in the filter adaptor casting, opens to return all excess oil delivered by the oil pump to compartment "B" when

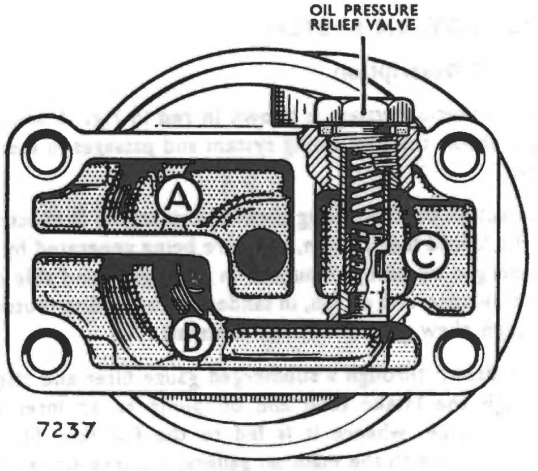

Fig. 10. *Oil pressure relief valve and oil filter base.*

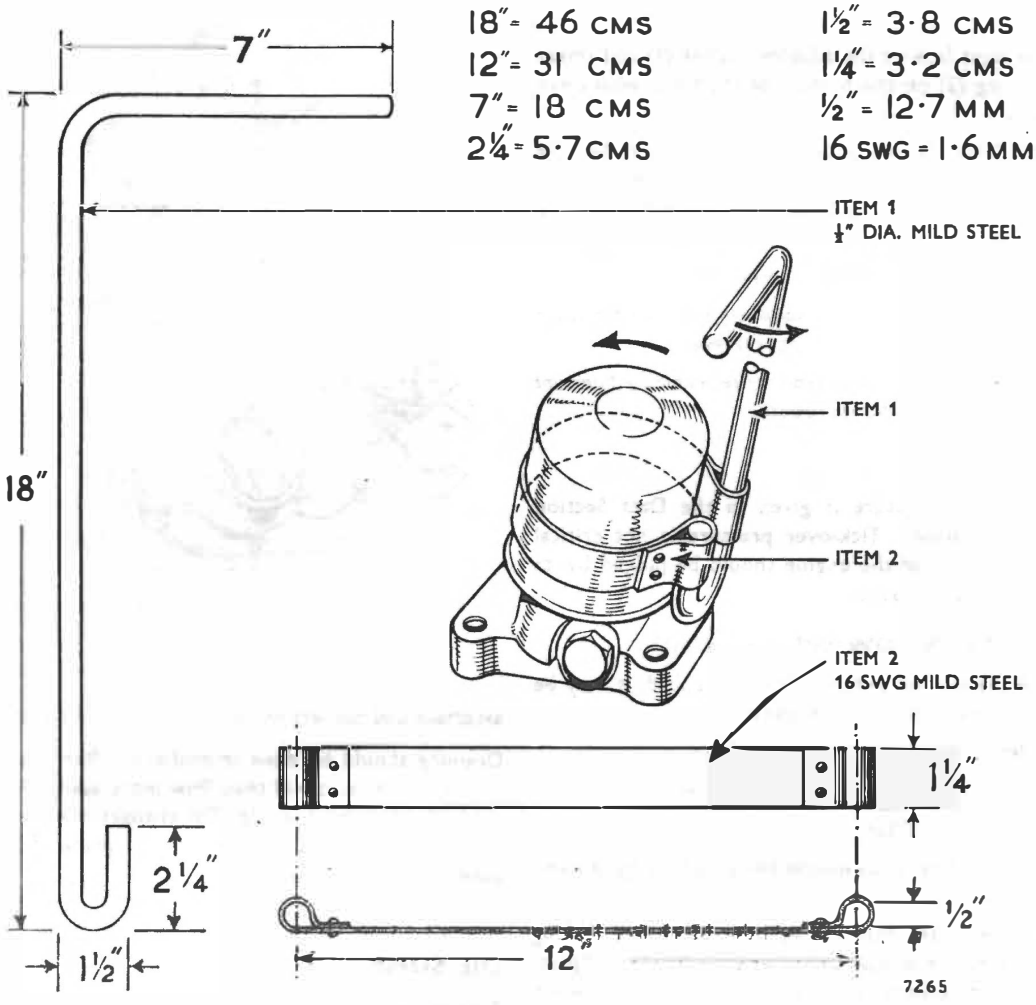

Fig. 11. *Strap wrench—for removing throwaway oil filter.*

the oil pressure exceeds the normal pressure given under "Lubrication" in the Data Section. The excess oil is discharged into compartment "C" from where it drains into the engine sump.

The oil pressure relief valve can be removed as a complete unit with a $\frac{13}{16}$ in. A.F. ring spanner. It is identified by pip on the hexagon head as shown in Fig. 10.

By-pass valve—see Fig. 9

A by-pass valve (6) is fitted inside the throw away filter unit and forms part of this assembly as shown in Fig. 9.

If the filter element (5) becomes choked, through neglect to change the filter assembly at the servicing periods, the by-pass valve (6) opens and allows oil to pass directly to the engine bearings without being restricted by the blocked element (5).

Opening of the by-pass valve (6) can only occur when there is a pressure difference of over 7 lbs. per sq. in. (0·5 kg.sq.cm.) above and below the by-pass valve.

Changing throw away filter unit

To remove—see Figs. 9 & 11

The rubber joint ring (2) on the filter base tends to stick to the adaptor casting (1) joint face, and if the filter cannot be removed by hand it can be unscrewed with a strap wrench, which can be made from the particulars given in Fig. 11.

To fit

Clean the joint face on the adaptor casting (1) and smear the joint ring (2) on the bottom of the filter with clean engine oil.

Screw the filter (7) into position until it just touches the joint face on the adaptor casting. THEN SCREW THE FILTER A FURTHER TWO THIRDS OF A TURN BY HAND ONLY.

Run the engine and check for oil leaks.

Top up sump oil level to replace oil used to fill filter casing, and fill sump to the correct oil level.

If the filter unit is tightened beyond the recommended amount it will become very difficult to remove.

OIL PRESSURE

The normal oil pressure is given in the Data Section under "Lubrication". Tick-over pressure is not critical and the condition of the engine should be judged by its normal running pressure.

REASONS FOR LOW OIL PRESSURE

If abnormally low oil pressure is experienced, it may be due to one of the following reasons:

Low oil level in sump.

Pressure relief valve not working properly.

Chocked oil pump filter.

Oil leaks caused by faulty unions and joints, or by cracked or broken pipes.

Joint between filter base and cylinder block face leaking between pressure compartment and discharge compartment. This sometimes causes a lower oil pressure when the engine is cold.

Timing chain oil feed pipe loose or damaged.

Dilution of oil in sump. (See following paragraphs.)

Worn main and big end bearings.

Worn oil pump components.

OIL DILUTION

Dilution of the lubricating oil may be brought about by the addition of poor quality oil, or by fuel leaking past pistons and rings. The latter condition may be due to worn bores, pistons and rings, and is most likely to occur in cold weather.

Symptoms of crankcase dilution are low oil pressure, rapid wear, overheating, loss of power and emulsification of oil. Emulsification of oil can also be caused by the presence of water due to condensation.

If inspection confirms that dilution has taken place, ascertain and correct the cause of it and drain the sump.

Draining should be done immediately after a run, while the oil is hot, as it will then flow more easily. Refill with new oil of correct grade. Oil changes should then be attended to regularly and the correct grade of oil always used.

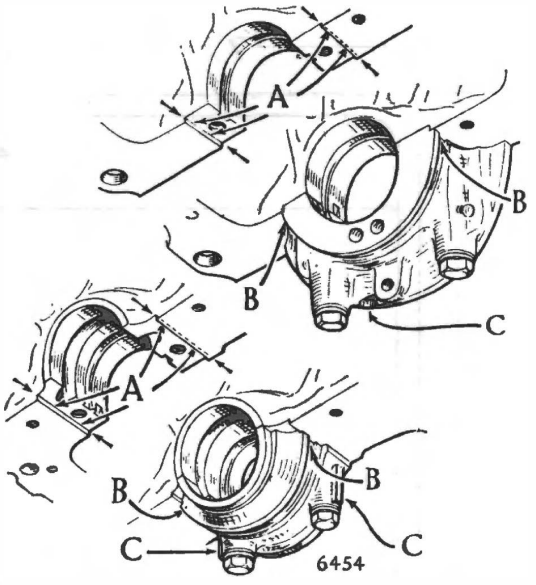

Fig. 12. *Places at which to use jointing compound on main bearing caps.*

OIL SUMP

To remove

Drain oil from sump by removing drain plug.

Undo eighteen bolts securing sump to lower face of crankcase. It is advisable to leave one centre bolt on each side in place until the weight of the sump can be taken by hand, to avoid distortion of the joint faces.

To refit

As the sump face is in line with the horizontal axis of the crankshaft main bearings, a semi-circular cork joint is used between the front and rear main bearing caps and the sump, in addition to the normal face joints at each side.

The semi-circular cork joints should be fitted to the front and rear main bearing caps after fitting the cylinder block bottom face joints. All sump joints should be fitted dry except at the two ends of the semi-circular joints where a small quantity of quick setting jointing compound should

be put into the recesses (B) into which the ends of these joints fit. See Fig. 12.

The centre sump bolts should be fitted first and all bolts progressively tightened.

When dealing with difficult cases of oil leakage, the front and rear main bearing caps should be removed and "Wellseal" or other suitable non-setting jointing compound applied along the front and rear main bearing recess vertical locating faces (A) as shown in Fig. 12. On replacing the main bearing caps the jointing compound is trapped in the small corner clearance between the outside edges of the bearing caps and the corner of the locating recess. This prevents oil leakage along the small clearance that must exist at these points and along which oil sometimes leaks.

The identification marks, shown by (c) in Fig. 12 show that THIN semi-circular cork joints of ·150—·160 ins. (3·8—4·0 mm.) are used.

OIL PUMP — See Fig. 13

A four-lobe rotor mounted on the main spindle drives a ring into which are machined five internal lobes. The outer diameter of the ring rotates in the circular bore of the oil pump body, which is offset from the main spindle.

The action of the four-lobe cam on the five-lobe ring creates a strong pumping force by progressively increasing and reducing the clearance between each set of lobes. The pump itself is driven by skew gears from the camshaft.

Intake filter — position

The oil pump filter intake pipe lock nut is tightened so that the filter gauze body is parallel to the cylinder block sump face.

Intake filter — to clean

Whenever the sump is removed the opportunity should be taken to clean this gauze filter.

The gauze should be washed in petrol or paraffin and blown dry with clean compressed air. Do not dry with a fluffy rag.

Provided the recommended lubricating oil is used, and the external full flow filter cleaned at the recommended mileages the oil pump intake filter does not normally need cleaning.

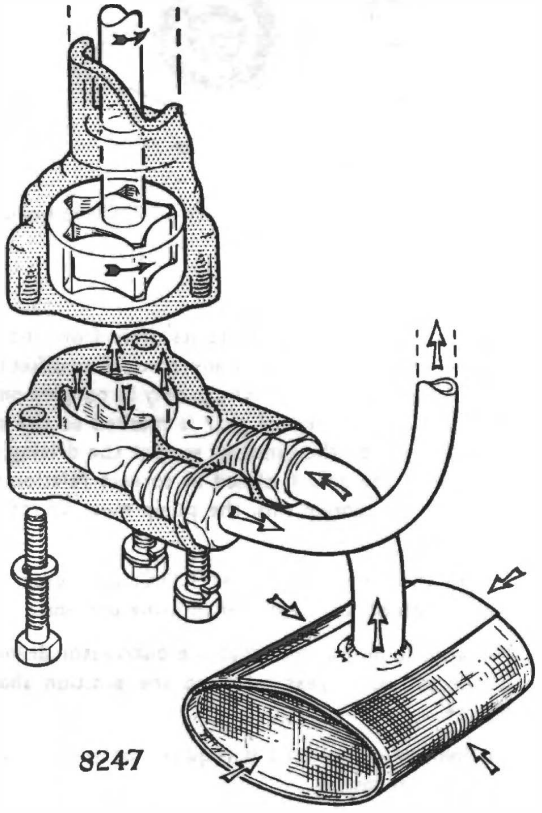

Fig. 13. *Oil pump—internal details.*

To remove

Remove distributor cap, and turn engine until distributor is pointing to No. 1 firing position, and the crankshaft pulley T.D.C. pointer lines up with the timing cover pointer at T.D.C.

Remove distributor.

Remove sump (oil pan).

Disconnect oil delivery pipe from pump and from inside crankcase. Undo two setscrews at oil pump locating flange and remove pump.

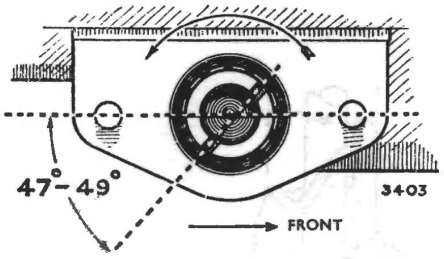

Fig. 14. *Oil pump drive—at No. 1 TDC firing position.*

To refit

The ignition distributor takes its drive from the helical gear on the oil pump shaft axially, through an offset tongue and slot type coupling which can only be coupled one way, and the oil pump helical gear is meshed to the corresponding gear on the camshaft so that the driving slot in the end of the gear is timed in correct relation to the camshaft. To obtain this, the pump must be refitted as follows:

Ensure that the engine is at T.D.C. (top dead centre) with piston of No. 1 cylinder in firing position.

Replace the oil pump so that the distributor driving slot in the oil pump gear takes up the position shown in Fig. 14.

No jointing of any kind is required between pump face and cylinder casting.

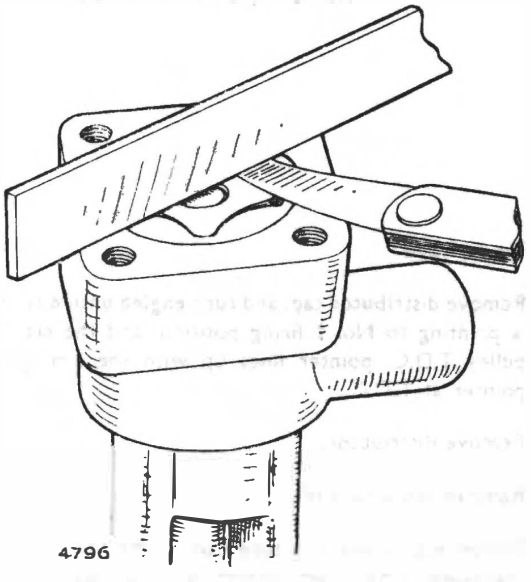

Fig. 15. *Checking oil pump rotor end clearance.*

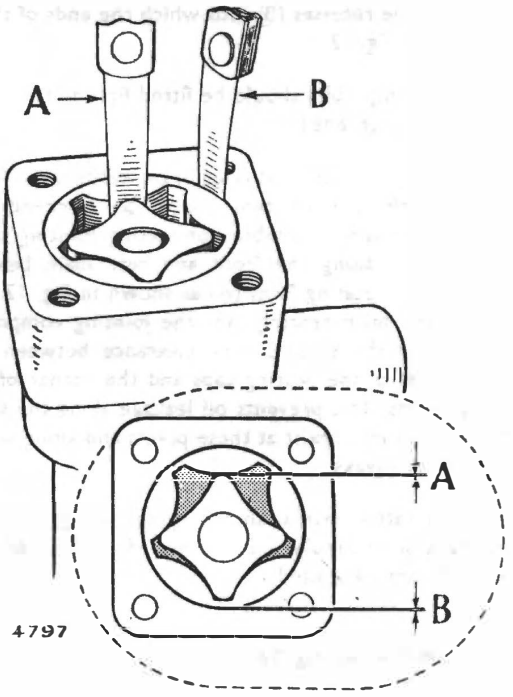

Fig. 16. *Checking oil pump rotor tip and outer rotor clearance.*

Refit sump (oil pan).

Refill with engine oil of specified grade to correct level.

Refit distributor and check ignition timing.

To dismantle, check clearances and overhaul

Invert the pump and remove the four hexagon-headed screws securing the base plate to the pump body.

Lift out the outer rotor ring taking care not to drop it.

IF THIS ITEM IS DROPPED IT CAN EASILY CRACK.

Remove all traces of oil from the inside of the pump body and both rotors. Replace outer rotor.

The following clearances should be checked:

1. End clearance between the inner and outer rotor ring and pump body. The maximum and minimum are ·003 in. (·076 mm.) and ·001 in. (·025 mm.) when measured with a feeler and straight edge as illustrated in Fig. 15.
2. Side clearance between the top of the lobes on the inner and outer rotor as shown on Fig. 16.

   The maximum and minimum clearances "A" are ·006 in. (·152 mm.) and ·001 in. (·025 mm.). New parts should be fitted if the maximum clearance is exceeded.
3. Clearance "B" between the outside of the outer rotor

and pump body must not be greater than ·008 in. (·20 mm.) and not less than ·005 in. (1·27 mm.). Should the clearance found be above the maximum figure a replacement pump should be fitted.

INLET AND EXHAUST MANIFOLDS

Engines with cast iron cylinder heads

To remove

Remove air cleaner.

Disconnect petrol pipe at carburettor.

Disconnect inner choke control cable from its lever on carburettor, outer cable from abutment bracket, throttle, and vacuum advance pipe.

Remove two nuts securing exhaust pipe flange to exhaust manifold. Remove six nuts securing manifold to cylinder head. Remove manifold complete with carburettor.

To dismantle and reassemble

To separate, undo four nuts securing inlet and exhaust branches.

Examine the stainless steel heat deflector. Renew this item if it is defective.

This deflector is marked FRONT and must be fitted as shown in Fig. 17.

To re-assemble, reverse the above procedure and ensure that manifold faces contacting the cylinder head are brought into correct alignment before tightening the four nuts that hold the manifolds together.

Engine with aluminium cylinder head — fitted with Solex Twin Choke Carburettor

To remove

Drain cooling system.

Disconnect coolant feed pipes to and from inlet manifold, vacuum feed pipe to brake servo unit, carburettor controls, fuel feed pipe, and crankcase ventilation pipes at carburettor and inlet manifold connectors.

Remove inlet manifold stays at each end of the inlet manifold.

Remove the three fixing bolts holding inlet manifold to cylinder head and lift off inlet manifold and carburettor. Slacken off alternator support bolts, remove belt from alternator pulley and move alternator over against battery.

Slacken off exhaust pipe clip immediately behind Y junction.

Remove four flange nuts holding the two exhaust pipes to the exhaust manifolds.

Remove four manifold fixing nuts, and manifold clamp bolt. Lift off exhaust manifolds.

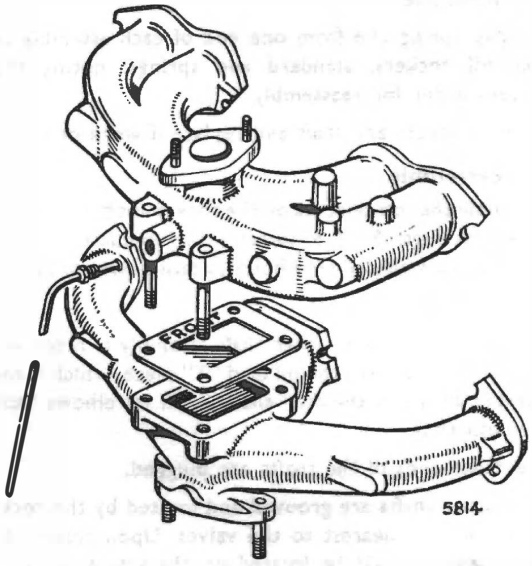

Fig. 17. *Inlet and exhaust manifolds—cast-iron cylinder heads.*

Engines with aluminium cylinder heads — fitted with twin CD Stromberg Carburettors

To remove

Remove the air intake filters from both carburettors.

Disconnect vacuum feed pipe to brake servo unit from the inlet manifold end.

Disconnect carburettor controls, and fuel feed pipe.

Remove the two outer and centre bolt holding inlet manifold to the cylinder head. Lift off inlet manifold complete with carburettors.

Slacken off exhaust pipe clip immediately behind Y junction.

Remove four nuts holding exhaust pipes to exhaust manifolds, four exhaust manifold fixing nuts, manifold clamp bolt and lift off exhaust manifold.

To refit — all engines

This is a reversal of the removal procedure. A new joint should be fitted between the manifolds and cylinder head. The fixing bolts and nuts should be retightened when the engine is hot.

ROCKER SHAFT ASSEMBLIES

To remove

Remove rocker cover. Undo union nut and disconnect oil pipe to rocker shaft.

Remove eight nuts securing the rocker standards to the cylinder head.

Lift out rocker shafts and upper oil feed complete.

To dismantle

Remove spring clip from one end of each assembly and take off rockers, standard and springs, noting their correct order for reassembly.

Inspect rockers and shaft and replace if worn or scored.

To reassemble

Assemble the components on the rocker shaft in the order shown in Figs. 5 or 6, locating the standards on each shaft to allow the oil feed holes to face downwards.

To refit

Make sure that each rocker shaft assembly is fitted with its open end towards the oil feed "T" piece, which is then inserted between the two shafts with its elbows facing the push rods.

The other ends of the shafts are plugged.

The rocker shafts are grooved and located by the rocker standard studs nearest to the valves. Upon reassembly, the grooves should be located on the side nearest the valves.

PUSH RODS

To remove and refit

Remove rocker cover.

Remove rocker shaft assembly.

When removing push rods, keep them in the same order as found and make sure that the tappets are not pulled out of their bores. A sharp tap on the side of the push rod will normally break the oil firm on the ball end.

When push rods have been replaced, reset the valve clearances and recheck clearance when the engine is HOT.

CYLINDER HEADS

Engines are fitted with either a cast iron or an aluminium cylinder head.

The cylinder head bolt retightening procedure for aluminium cylinder heads should be carefully noted and used as it is very important.

Engines must be allowed to cool down before removing the cylinder head.

To remove

Drain cooling system.

Remove air cleaner.

Disconnect radiator top hose.

Remove rocker cover.

Disconnect lead from thermometer transmitter.

Disconnect sparking plug leads.

Remove screws securing tappet cover to cylinder head.

Disconnect oil feed pipe union to rocker shaft.

Disconnect heater pipe (if fitted).

Remove eight bolts holding rocker shaft assembly to cylinder head. These bolts must be released evenly where they are loaded by any compressed valve springs.

Lift off rocker shaft as an assembly holding its two ends so that it cannot fall apart at its centre oil feed brass tee piece.

Remove push rods taking care not to draw the tappets out of the cylinder block. The push rods should be placed in a suitable holder so that they can be replaced in their original positions.

Disconnect fuel feed pipe at its fuel pump end, carburettor end, and its clipped position.

Disconnect carburettor controls.

Remove eight bolts and two nuts securing the cylinder head to the cylinder block.

Disconnect the exhaust pipe(s) at their flange(s) on the exhaust manifold(s).

Lift off cylinder head with manifolds and carburettor still attached.

Cover open end(s) of exhaust pipe(s).

Cylinder head gaskets

All gaskets are stamped with the word TOP and their identifying part number.

They have been varnished and are fitted dry.

Cast iron cylinder heads

A corrugated steel type gasket is used with these cylinder heads.

Aluminium cylinder heads

A copper and steel asbestos type gasket is used.

To refit

Reverse the above procedure. ensuring that all joint faces are clean. Always use a new gasket. Jointing compound should not be used.

It is most important that the cylinder head is aligned so as to correctly position the machined location for the tappet cover in relation to the corresponding machined face on the cylinder block, before tightening the cylinder head bolts.

Do not displace the tappet cover gasket when lowering the head. The cylinder head bolts should be tightened to the torque figure given in the Data Section under

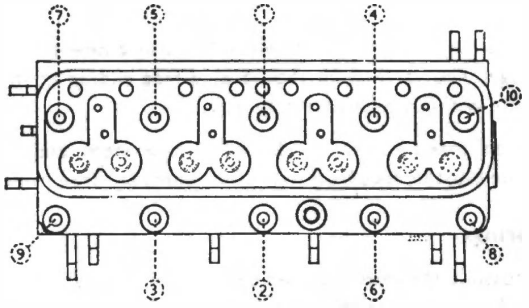

Fig. 18. *Cylinder head bolt tightening sequence.*

"Cylinder Head" in the order shown in Fig. 18 before tightening the tappet side cover screws.

Adjust valve clearances.

It is essential to adhere strictly to the torque wrench figures quoted.

Reset the valve rocker clearances with the engine HOT.

Retightening of cylinder head bolts

The Churchill Special spanner enables this to be done with the rocker gear in position. See Section S.

Cast iron cylinder heads

It is not necessary to retighten the head after the engine is warm, but it must be done on new engines because of the slight stretching of the cylinder head bolts, and studs, during the first 1,000 miles of running.

Aluminium cylinder heads

The following procedure should be used after refitting the cylinder head and fitting a new cylinder head gasket.

1. Run engine until it is thoroughly warmed up.
2. Allow engine to cool down and when COLD retighten the cylinder head.
3. Thoroughly warm up engine and reset the valve clearances.

Method of retightening cylinder head bolts — all engines

When checking cylinder head bolt tightness each cylinder head bolt should be slackened off slightly, and re-tightened to the correct torque one at a time in the order given in Fig. 18. This ensures that each bolt is correctly tightened.

If this is not done some bolts may be so stiff to move that a correctly set torque spanner may not be able to check them if their tightness is just below the correct torque.

COMPRESSION PRESSURES

An engine in good condition should give the compression pressures given in the Data Section under "Engine — General". These pressures should be taken at starter cranking speed with the throttle held fully open, all sparking plugs removed and the engine hot. If readings are obtained substantially below these quoted, the engine concerned is in need of attention to the valves or piston rings, or possibly requires reboring.

DECARBONISING

When the cylinder head has been removed for de-carbonising the complete set of valves should be removed for cleaning, inspection and refacing, (detailed instructions for these operations are given elsewhere in this section). The valve guides should also be checked for wear on their internal diameters and renewed if necessary. See "VALVE GUIDES — TO RENEW".

When removing the carbon from each piston crown, it is always advisable to leave a ring of carbon adjacent to the cylinder bore as this helps to preserve a good seal, and to conserve oil. A convenient method of doing this is to turn the engine until the piston is slightly below the top dead centre position, and insert an old piston ring of correct size in the bore, and press it down on the piston. In this way all the carbon within the old piston ring may be removed, leaving a ring of carbon around the edge.

Place clean rag in the exposed area of the tappet chamber, as no carbon should be allowed to enter.

Remove carbon from the tops of the pistons, the combustion chambers in the cylinder head and also from the valve ports. With a suitable scraper clean out the inside of the exhaust manifold.

Remove all loosened carbon, preferably by use of a compressed air line.

Care must be taken when decarbonising the tops of the pistons these being of aluminium alloy. No pointed instrument or emery cloth may be used.

Do not on any account use abrasives for removing carbon, or damage will result.

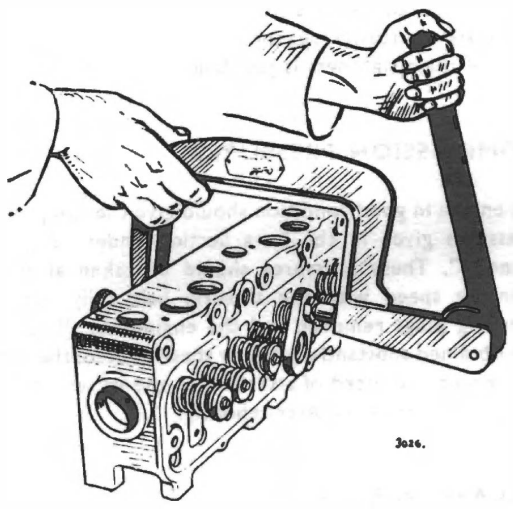

Fig. 19. *Removing valve cotters and springs.*

VALVES

To remove

The Churchill valve spring compressor, shown in Fig. 19, is recommended for this operation. Its reference number is given in Section S of this manual.

Using the valve spring compressor, remove the split coned cotters. When carrying out this operation care should be taken to ensure that no damage is caused to the valve stem by the hardened steel cotters and spring cups.

Release valve spring compressor and lift off cups and dual valve springs.

Remove the valves.

EXAMINATION OF VALVES, SPRINGS AND GUIDES

Valves

Examine for pits on the face, burning and distortion or cracks in the heads. Burnt or cracked valves must always be replaced. See also "Valves — Refacing".

Examine the seatings in the cylinder head, and if defective they should be re-cut. See "Valves seatings — to re-cut". If the valve stems are appreciably worn the valves must be replaced.

Wear of valve stems may be checked by means of a micrometer, and the stem should be checked from various angles and positions, as the stems of valves do not wear evenly. The stem diameter of new valves is given in the Data Section.

Guides

These may be checked for wear by using a new valve as a gauge. The valve stem should be a free sliding fit in the guide without excessive side play.

When making this check both valve stem and valve guide must be free from carbon or burrs and free from oil.

Springs

If possible the load required to compress the valve springs to their fitted heights should be checked.

The required load and length to compress the springs is given in the Data Section under "Valves". The use of a dial type valve spring tester is strongly recommended.

If a spring tester is not available a simple rig as illustrated in Fig. 20 can be made and used. An alternative method is to check the used valve springs by comparing them with new springs. Place them end to end on a long bolt and compress them in a hand press. Any loss will then be apparent as the weaker spring will close up first. If either spring of a pair is weak both inner and outer should be replaced as a pair. Inner and outer valve springs are supplied in new pairs only and should not be interchanged.

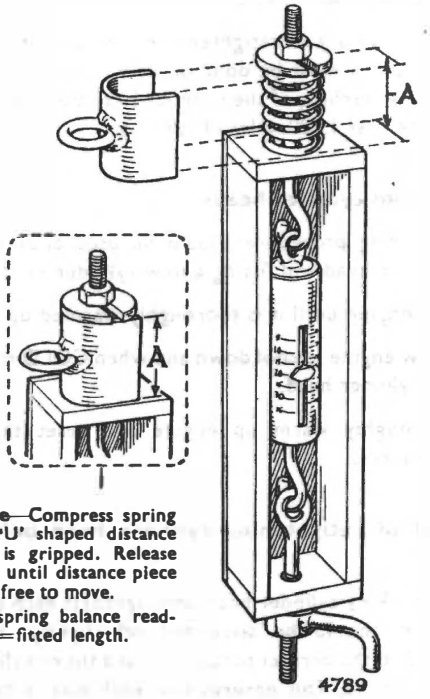

Fig. 20. *Valve spring testing rig.*

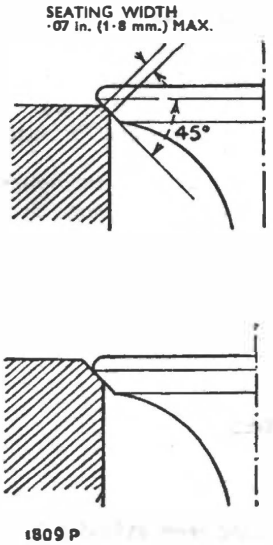

Fig. 21. *Valve seating.*

VALVES

To grind in

This operation will be satisfactory only if the valves and seatings are found to be in good condition after dismantling and examination, and there is no evidence of distortion or burning of the faces and heads of the valves.

It is also necessary after new valves have been fitted, or seastings recut. The valve stems must be free from wear and their guides must be in good condition.

Place a small amount of valve grinding paste (fine) evenly around the face of the valve to be ground, not allowing it to get on the stem of other parts.

Place the valve on its seating and by means of a suction grinding tool, rotate the valve from side to side through a few degrees only, using a light pressure. Frequently raise the valve and move round to a new position on its seating and continue grinding. (On no account should the valve be revolved through complete revolutions when grinding, or rings will be formed on the face with detrimental effects).

The grinding should be continued in this manner until a continuous but narrow seating has been obtained both on the valve and the seating. The seatings should be more than ·070 in. (1·78 mm.) in width. See Fig. 21.

After thoroughly cleaning off all traces of grinding paste from the valve seating with a dry cloth, test by placing a small amount of engineers' marking on the seating and revolving the valve in place not more than about $\frac{1}{8}$ in. (3 mm.) in each direction. A complete circle of marking should appear on both the valve face and seating, indicating a good seal.

VALVES

To refit

The valve stems should be given a thin coating of oil when the valves are refitted.

The valve spring cups have a sealing ring in the lower end. See Fig. 22. When refitting care should be taken to avoid damage to the sealing ring as damaged rings can cause oiling up of the sparking plugs.

The sealing rings should be renewed if faulty.

On some aluminium cylinder heads one steel packing washer is fitted under each valve spring to bring the spring to its correct fitted length. These washers must not be left off of any cylinder head on which they were originally used and must not be fitted to any cylinder head where they are not needed. If doubt exists the fitted height of the valve spring should be checked. This dimension is given in the Data Section under "Valves" as "Valve spring — fitted length".

VALVES

To reface

If, on examination of the valves it appears unlikely that they would clean up satisfactorily with ordinary grinding in, they must be refaced. If the seatings are also in bad

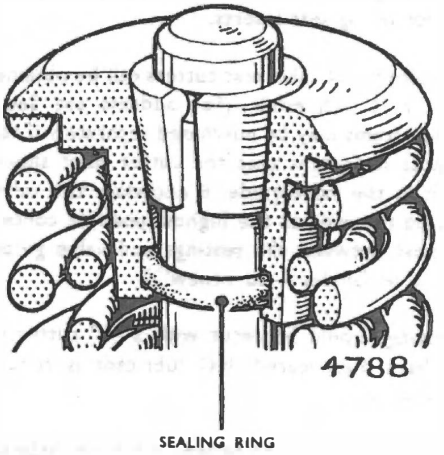

Fig. 22. *Valve spring cap sealing ring.*

condition they must be recut, but generally it will be found that these are better than the valves as regards condition unless the engine has been a very long time in service. It is quite practicable to reface the valves and grind them in on the seatings if the latter are in good order.

It is always better to replace a badly burnt or pitted valve as extended refacing will bring it very low on its seating by reason of the consequent reduction in the effective diameter of the valve face and "pocketing" will result. (See Fig. 21.) This condition is detrimental to the running of the engine and will cause overheating and loss of power. The valve face should be machined only until it is just true and clear of marks, to the standard angle of 45° for inlet and exhaust. These angles are measured from the top of the valve head. Standard dimensions of valves are given in the Data Section at the beginning of this manual.

The refacing of these valves must not leave too thin an edge above the valve head seating. This applies particularly to exhaust valves which must be renewed if much refacing is needed.

A valve which has been refaced as described must also be finally ground in on its seating. (See "Valves — to grind in".) The seating must be in good condition and the face not more than ·070 in. (1·78 mm.) in width.

VALVE SEATINGS

To recut

A damaged or slightly burnt seating may be refaced with a 45° seating cutter, or valve seat grinder. The latter is better for facing seat inserts.

A complete set of valve seat cutters can be obtained from Messrs. V. L. Churchill. (For address see Section S.) Individual items may be purchased separately if required. It is most important that the cutter pilot should be a good fit in the valve guide. If necessary the valve guide should be renewed as the highest possible concentricity must exist between the seatings and valve guide bore. (See "Valve Guides — to renew".)

The seating should be recut with a 45° cutter until all marks have disappeared. NO lubricant is required for this operation.

After recutting a seat its refaced valve should be inserted in the valve guide to check where the valve seats. If the valve comes too low in the seating a new valve should be tried. If this valve comes too low in the recut seating a 15° cutter should be used to reduce the width of the seating. Occasionally it is necessary to reduce the seating width from the bottom by means of a 75° cutter.

It is important to ensure that the finished seat width is not greater than ·07 in. (1·8 mm.) and that the valve seats correctly as shown in the upper picture in Fig. 21. After refacing valve seats the valves should be ground in and only a little grinding should be necessary to produce a good seating.

VALVE GUIDES

To renew

Engines with cast iron cylinder heads

The valve guides are driven out of the cylinder head from their valve spring end. It is not advisable to drive from the valve port end because the guide ends become brittle under the heat to which these ends are exposed.

New valve guides must have the prescribed interference fit in the cylinder head given in the Data Section under "Valves". Oversize valve guides are available.

The guides should be driven into the cylinder head, from their upper end, until they project by the amount given in the Data Section, under "Valves" — valve guide fitted height above head.

The valve guides must be fitted to their respective ports. Inlet valve guides are shorter than the exhaust valve guides. Both guides have a circular groove around their upper ends.

The valve guides can be driven out, and driven in with the Churchill valve guide remover/replacer. See Section S. After fitting the valve guides should be reamed with a spiral fluted reamer to give a guide bore diameter of ·3125-·3135 in. (7·94-7·96 mm.).

Engines with aluminium cylinder heads

Valve guides can only be fitted and renewed with the Churchill valve guide remover/replacer when the cylinder head has been uniformly heated to a temperature of 200°C (390°F).

A suitable size gas or electric cooking stove fitted with a Rototherm or other type of thermometer in the oven door can be used for heating the cylinder head. The oven temperature should be maintained at 200°C. (390°F) while

the cylinder head is left in the oven for about 30 minutes.

A circlip is fitted to both inlet and exhaust valve guides and ensures that the guides are correctly fitted when the circlips come against the cylinder head.

Both valve guides are chamfered on the top ends. The inlet valve guide has a long chamfer at the valve port end and is slightly shorter in length than the exhaust valve guide.

A stand is needed for the cylinder head after it is heated. This consists of a piece of thick hardwood covered on one side with soft asbestos sheet to prevent damage to the cylinder head face. Eight holes should be cut through the board to give ample clearance around the valve guides, when the cylinder head is resting on its top face, to allow the valve guides to be driven out from the valve head ends. As an additional means of retaining heat a fairly close-fitting four-sided wood box, lined with asbestos can be placed around the cylinder head after it has been put on the bottom support board. This will leave only one face exposed.

The valve guides can be driven out with a suitably stepped mild steel drift provided that the cylinder head is heated to the proper temperature. THEY CANNOT BE DRIVEN OUT OF A COLD CYLINDER HEAD.

New valve guides must have a proper interference fit and can only be installed when the cylinder head has been heated to the proper fitting temperature. This usually requires the fitting of guides having an outside diameter of ·001 in. (·025 mm.) larger than the guides that are removed. The correct intereference for these valve guides is given in the Data Section under "Valves".

The valve guide depth positioning circlips should be fitted to the valve guides before driving the valve guides into the cylinder head.

The sharp edge of the top end of the valve guide must not be damaged as this edge is used to scrape excess oil from the valve stem.

After fitting, the valve guides should be reamed with a spiral fluted reamer, to give a valve guide bore diameter of ·3125-·3135 ins. (7·94-7·96 mm.).

EXHAUST VALVE SEAT INSERTS

Engines with cast iron cylinder heads

Exhaust valve seat inserts are not normally fitted to new engines but inserts are available for service use in four sizes, standard +·002 in. (·050 mm.) +·005 in. (·127 mm.) and +·010 in. (·254 mm.).

When inserts have to be used new valve guides should be fitted and the cylinder head recessed deep enough to take the insert to a diameter that will give the insert an intereference fit of ·0025 in. (·063 mm.) to ·0045 in. (·114 mm.). The insert must be pressed in perfectly square until it seats on the entire bottom face of the recess.

The valve seat, on the newly fitted insert, should be cut at an angle of 45° to a width of ·05 in.-·06 in. (1·27 mm.-1·52 mm.) and must be concentric to within ·001 in. (·025 mm.) of the valve guide bore.

EXHAUST AND INLET VALVE SEAT INSERTS

Engines with aluminium cylinder heads

These inserts can only be fitted when the cylinder head has been uniformly heated to 200°C (390°F). The equipment previously described under "VALVE GUIDES — To renew", should be used.

Inserts cannot be extracted from a cold cylinder head as they are fitted ·010 in. to ·032 in. (·25 mm. to ·81 mm.) below the combustion chamber face which shrinks in above the inserts.

To remove

Old inserts can be removed by boring out until the insert collapses. The machine depth stop should be set so that boring cannot continue beyond the bottom face of the insert recess in the cylinder head.

To replace

1. Check the valve seat recess diameter.
2. Select a suitable oversize valve seat insert and check its outside diameter.
3. Machine the cylinder head recess diameter to the best possible finish concentric to the valve guide centre so that the insert will have the correct interference fit of ·0025 in.-·0045 in. (·063-·114 mm.).
4. Heat the cylinder head for 30 minutes from cold in an oven maintained at a temperature of 200°C (390°F).

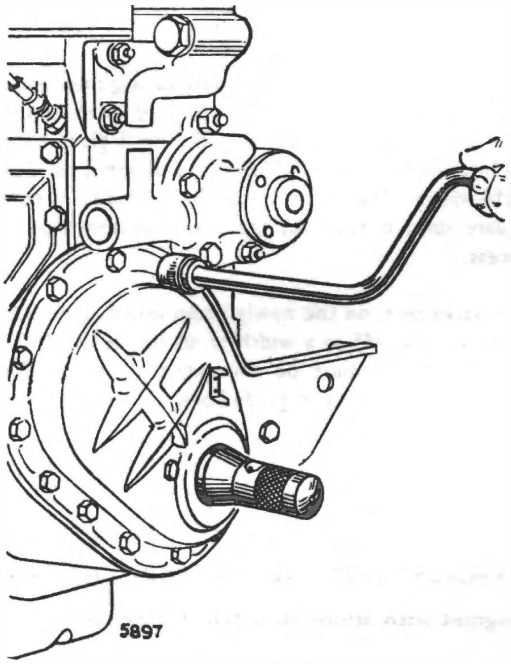

Fig. 23. *Centralising timing cover.*

5. Fit the insert ensuring that it beds on the bottom face of its recess.

6. The valve seat on the newly fitted insert should be cut or ground at an angle of 45° to a width of ·05 in.-·06 in. (1·27 mm.-1·52 mm.). The seat must be concentric to within ·001 in. (·025 mm.) of the valve guide bore.

7. After replacing an inlet valve seat the inner bore of the insert must be carefully enlarged to blend with the inlet port immediately behind the valve seat.

TAPPETS

To remove and refit

Remove rocker cover, rocker shaft assemblies, and push rods.

Remove engine side cover, as follows:

Remove the oil filter. Remove distributor. Take out screws securing side cover and remove cover.

Lift out tappets. Tappets should be numbered in pencil on removal so that they can be replaced in their original positions.

Tappet faces in contact with the cams should be free from pitting and wear. Regrinding of the tappet faces is not recommended as it reduces the thickness of the hardened face.

Refitting is a straightforward reversal of the above procedure. Note that the tappets should be replaced in the bores from which they were removed.

TIMING COVER AND TIMING CHAIN TENSIONER

To remove

Drain and remove radiator.

Slacken the generator or alternator mounting screws and remove fan belt.

Unscrew crankshaft jaw nut with Churchill starting dog nut spanner and pull off crankshaft pulley.

Remove all screws and nuts holding cover in position, and withdraw cover. This will allow tensioner to come off the timing chain and to hang on its pivot.

Remove tensioner if necessary.

To refit

Reverse the above operations. In replacing the cover, the timing chain tensioner will again rest against the timing case side and correctly tension the timing chain. It is very important to centralise the cover around the crankshaft pulley before fully tightening the bolts. The timing cover centralising tool obtainable from Messrs. V. L. Churchill, should be used as shown in Fig. 23. (See Section S.)

TIMING WHEELS AND CHAIN

To remove

Remove timing cover.

Remove split pin and plain washer from tensioner pivot pin and lift off tensioner blade.

Remove the setscrew, tab washer, and plain washer from front end of camshaft.

Remove oil thrower in front of crankshaft sprocket. Pull or lever off both camshaft and crankshaft wheels simultaneously. A Churchill puller, is used for withdrawing the crankshaft sprocket. See Section S.

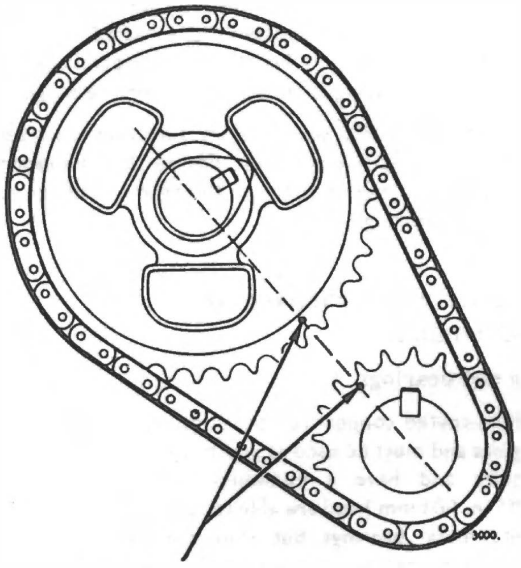

TIMING WHEEL MARKINGS

Fig. 24. *Position of timing wheel marking when replacing timing chain.*

To refit

When refitting, set Nos. 1 and 4 pistons to T.D.C. so that the key is to the top of the crankshaft.

Push crankshaft wheel onto crankshaft until it is approximately 1·5 in. (38 mm.) from the shaft shoulder.

To obtain the correct valve timing, fit chain to crankshaft wheel and camshaft wheel so that the dots on the camshaft and crankshaft wheels are in line. (See Fig. 24.)

Turn camshaft until the key lines up with the key way in the camshaft wheel.

Pull camshaft wheel onto camshaft by means of a washer and bolt screwed into the camshaft end, and drive crankshaft wheel onto crankshaft.

THE CAMSHAFT SPROCKET MUST NOT BE DRIVEN ONTO THE CAMSHAFT BECAUSE THIS CAN FORCE THE CAMSHAFT BACKWARDS AND DISPLACE THE SEALING DISC AT THE OUTER REAR END OF THE REAR CAMSHAFT BEARING. SEE FIG. 1.

Replace camshaft sprocket fixing bolt and washer.

Secure bolt with a new lock washer.

Replace crankshaft oil thrower.

Refit chain tensioner and timing cover, making sure that the tensioner blade is correctly fitted.

The front face of the timing case is bolted to a pedestal bolt, and the free end of the tensioner rests on the inside of the timing case.

Camshaft sprockets used on these engines have a small circular groove machine on the rear face just below the bottom of the sprocket teeth.

Valve timing — to check timing chain replacement

This is only necessary when incorrect replacement of the timing chain is suspected, in which case the following quick check can be made.

1. Remove rocker cover and adjust No. 1 cylinder inlet valve rocker clearance to ·019-·020 in. (·48-·50 mm.) when No. 4 cylinder inlet valve is fully open. This is important as valve timing cannot be checked at the normal valve rocker clearances.
2. Turn engine until the pointer on the crankshaft pulley gives a position of about 60° B.T.D.C.
3. Set up a clock gauge to show when No. 1 inlet valve begins to move. To do this the gauge stylus point must contact the valve spring cap. Set the gauge dial to read zero and turn the engine slowly until the gauge shows ·001 in. (·025 mm.) downward movement of the valve spring cap. Note the position of the crankshaft pulley pointers or markings. They should show approximately 19° B.T.D.C. for engines with cast iron cylinder heads and 29° B.T.D.C. for engines with aluminium cylinder heads on the crankshaft pulley.

   If the valve timing is one tooth out, the correct mark on the crankshaft pulley will be a considerably greater distance before T.D.C. or at or near T.D.C.

   The valve opening point can also be found with reasonable accuracy by attempting to rotate the valve spring cap with the first finger and thumb. Directly the valve leaves its seat it is possible to slightly twist the valve and this movement will be seen on the spring coils. The actual opening point of a valve cannot be determined by noting when a thin feeler is gripped between the rocker and valve stem end or by rotating the push rod to find when load comes onto the push rod.
4. Readjust No. 1 cylinder inlet valve to its normal clearance.

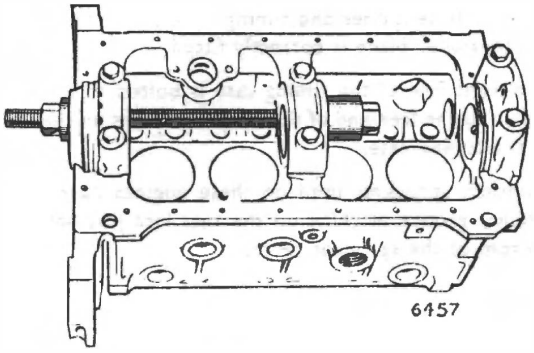

Fig. 25. *Removing camshaft bearing bushes*

CAMSHAFT

Differences

The camshafts used on this range of engines are not interchangeable because of the different valve opening periods and different positions of the cams.

To remove and refit

Disconnect electrical leads and remove distributor.

Drain and remove sump and oil pump.

Remove tappets and fuel pump.

Remove radiator.

Remove timing cover, crankshaft oil thrower, and timing wheels and chain.

Remove two setscrews and take off camshaft thrust plate and withdraw camshaft gently to avoid damage to bearings.

Refitting is a reversal of this procedure, correctly timing camshaft and replacing oil pump as explained under "Oil pump".

Endfloat

After replacing the timing wheels, the camshaft end float should be checked with a clock gauge. The end float must not exceed ·002-·003 in. (·050-·076 mm.). Oversize thrust plates are available for fitting if required.

CAMSHAFT BEARINGS

To renew

Using a suitable withdrawal tool, as shown in Fig. 25, the front and end and centre bearing can be withdrawn forwards.

The gearbox, clutch and flywheel, together with rear sealing disc, will have to be removed to enable rear bearing to be withdrawn rearwards.

This operation will, in all probability, be carried out on most occasions when an engine is overhauled, and will be facilitated with the cylinder block in a stripped condition. Replacement bearing shells do not require reaming.

Pull the bushes into place making sure that the oil feed holes are correctly positioned. Ensure that the camshaft sealing disc is made oiltight at the rear end of the camshaft rear bearing.

PISTON AND CONNECTING ROD ASSEMBLIES

Big end bearings

Indium-coated copper lead bearings are fitted to all new engines and must be used as replacements. These bearings require and have a minimum running clearance of ·0015 in. (·04 mm.) and are able to carry greater loads than white metal bearings but they are harder and small particles do not bed themselves into the bearing metal. In consequence scoring of the crankshaft big end journals will occur if abrasive particles reach the bearings. Regular oil changing and renewal of the filter element at the recommended mileages are therefore most important.

To renew

If necessary, the big end bearings can be renewed, after removing the sump provided that crankshaft big end journals are not scored or worn.

Pistons

Most engines are fitted with high compression pistons, but in some export territories engines are fitted with low compression pistons to meet the requirements of lower octane fuels.

High, and low compression pistons are identified by the particular letter stamped on the piston crown. Details of these letters are given in the Data Section under "Pistons".

Fitting clearances are the same for all pistons.

Pistons and connecting rods — to remove

Remove cylinder head.

Remove sump.

Remove the self-locking nuts securing big end bearing caps.

Remove connecting rod caps with bottom half big end bearings. No identifying numbers are stamped on either the connecting rod or connecting rod cap.

Push pistons up the cylinder bores and withdraw assemblies from above.

If the original parts are to be used again it is essential that the big end caps are reassembled to the same rods from which they were removed. To show correct assembly, a forging flash is left on the oil squirt hole side of the connecting rod. This flash lines up with a similar flash on the connecting rod cap. Each complete connecting rod should be refitted to the same piston and cylinder bore from which it was removed.

Pistons and connecting rods — to refit

When the rods are fitted, the oil squirt holes, drilled through the small projections immediately above the big ends, must face towards the right hand (thrust) side of the cylinder walls, with the engine viewed from the rear.

Check that the pistons and connecting rods are correctly assembled, then insert connecting rods and pistons into cylinder bores from above in the opposite manner to that detailed for removal.

To facilitate insertion of the pistons in the cylinders and to prevent piston ring breakage, a piston ring compressor should be used.

The scraping edge of the slotted oil control rings are easily broken if an improvised ring compressor is used.

The Churchill piston ring compressor should be used. See Section S.

Tighten nuts to the correct torque given in the Data Section under "Connecting Rod".

These nuts are $\frac{11}{32}$ in. x 24 T.P.I. UNF. Care is needed to ensure that $\frac{3}{8}$ in. x 24 T.P.I. UNF nuts, used on other Rootes engines, are not fitted when replacement nuts are required. As the larger $\frac{3}{8}$ in. nuts have the same number of threads per inch they can easily be screwed onto the $\frac{11}{32}$ in. x 24 T.P.I. big end bolt thread and will strip the threads when tightened to about 12 lbs. ft. torque (1·5 kgm.).

The self-locking nuts must not be used again if they can be screwed on with the fingers.

Gudgeon pin — to remove

Remove circlips retaining gudgeon pin in piston with circlip pliers. Scrape away any carbon which may have accumulated in the outer ends of the piston bosses to facilitate removal of the gudgeon pin.

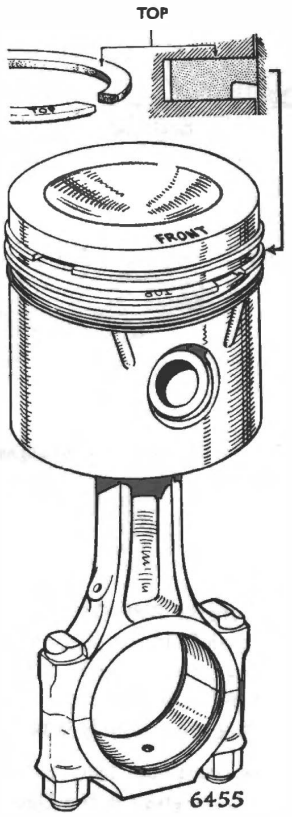

Fig. 26. *Piston correctly assembled to connecting rod.*

Warm the assemblies, preferably in oil, and push out the gudgeon pins. Tight fitting gudgeon pins should not be driven out of cold pistons.

Gudgeon pin — to refit

The fit of the gudgeon pin in the piston bosses and small end bush is critical.

The original piston gudgeon pin and small end bush may be used again, in this respect, only if the gudgeon pin is without shake, both in the piston bosses and in the small end bush.

The gudgeon pin retaining circlips should be renewed.

The correct way of assembling the piston on the connecting rod is shown in Fig. 26.

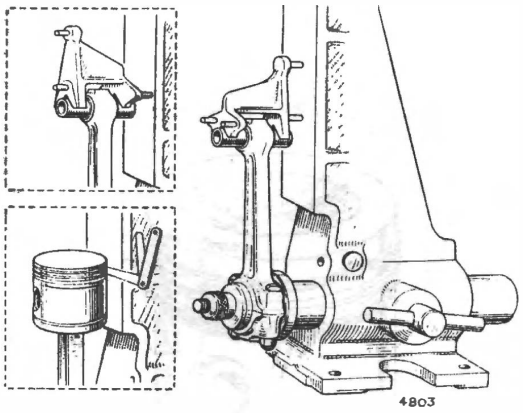

Fig. 27. *Checking connecting rod alignment.*

Gudgeon pin — fit

At room temperature of 70°F (21°C) the gudgeon pin should be a finger push fit in the piston and only just free in the connecting rod little end bush. It should be possible for the connecting rod to fall by its own weight when the piston and connecting rod assembly is held horizontal.

Gudgeon pins are classified into three grades, the dimensions, of which are given in the Data Section under "Gudgeon Pins".

·003 in. (·076 mm.) oversize gudgeon pins are available for service use.

Honing is recommended for finishing a new little end bush to size, or for enlarging this bush and the piston bosses to take ·003 in. (·076 mm.) oversize gudgeon pins. The Delapena precision honing machine is recommended for this operation. This machine may be obtained from Delapena and Sons Ltd., Zona Works, Cheltenham, England, together with the necessary honing stones, honing fluid and instruction booklet.

Connecting rod alignment — See Fig. 27

After fitting and honing, or reaming a new connecting rod little end bush to size, the connecting rod alignment should be checked. The Churchill alignment jig, for connecting rods, with the adaptors for this engine should be used. See Section S. Connecting rod alignment should also be checked when rubbing marking on the front and rear faces of the piston is not even around the piston skirt. Connecting rods can be straightened in a large bench vice using special vice jaws.

PISTON RINGS

Top compression ring

This piston ring is chromium plated with the word "Vacrom" etched on one of its side faces. It may be fitted either way up and is Cargraph treated to assist bedding in. This treatment leaves it a dull grey and faintly red colour.

Second compression ring — See Fig. 26

To provide more rapid running in and also to assist in oil control, a stepped periphery compression ring is fitted in the second groove from the top of both standard and oversize pistons. It is most important that this ring is correctly fitted with the step downwards, that is, with the widest face toward the top of the piston. This face is marked "TOP" to indicate that it should be fitted uppermost. Incorrect fitting will result in higher oil consumption.

Scraper ring

One slotted type scraper ring is fitted in the third groove. Care is needed when fitting these rings as the scraping edges are easily broken.

Top chromium plated piston rings

Where the need arises to fit new chromium rings to polished (part worn) bores, it will be necessary first to remove the glaze from the bores as otherwise these rings may never bed down properly.

The procedure to be adopted in such cases is as follows:

1. Mask off the bottom of the cylinders to prevent any abrasive matter reaching the crankshaft or crankcase.
2. Make up a wooden dummy piston which will fit snugly into the bore with a piece of No. 1 or 1½ grade emery paper wrapped round it.
3. This dummy piston, with the emery cloth round it, should then be inserted into each cylinder in turn and moved up and down the bore for about 3 minutes (each cylinder) at the same time rotating it first one way and then the other until the entire cylinder wall is covered with criss-crossed abrasions.
4. Wash down the bores thoroughly and dry them out ensuring that no foreign matter finds its way into the crankcase.

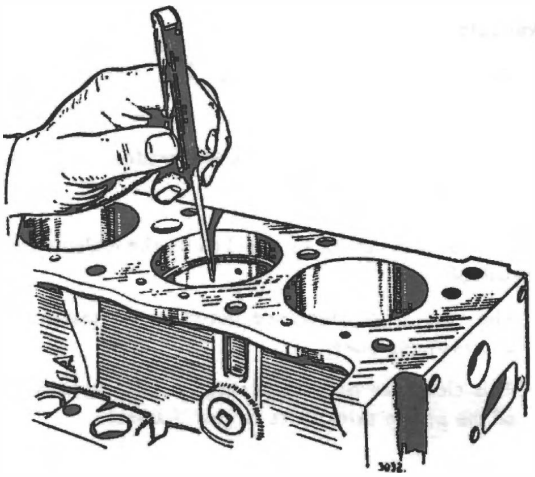

Fig. 28. *Checking piston ring gaps*

A very useful glaze remover can be obtained from:

Hepworth and Grandage Ltd.,
St. Johns Works,
Bradford 4,
ENGLAND

This tool gives very satisfactory results if operated by hand or at very low speeds, but it should not be used at any higher speed.

To fit

The correct ring gaps are given in the Data Section. These figures are easily obtained in grade A, B, C and D cylinder bores, but slightly larger gaps are sometimes obtained when checking piston rings in cylinder bores that can take grade E pistons. Fit the rings first to the cylinder bore and check the ring gap with a feeler gauge. (See Fig. 28.)

With a feeler gauge check for correct vertical clearance of the rings in the grooves, which should be ·0015-·0035 in. (0·04 -·19 mm.) for both compression and scraper rings. (See Fig. 29.)

Fit the rings to the pistons in such a way that the ring gaps are equally spaced out round the piston, and not in line with one another, making sure that the rings are checked at No. 1 cylinder are fitted to No. 1 piston and so on.

EXPLANATION OF PISTON AND CYLINDER BORE GRADING LETTERS

The pistons and cylinder bores are graded into the diameters given in the Data Section under "Engine General" and "Pistons".

The variation between each grade letter diameter is ·0004 in. (·010 mm.) and the total difference between the highest and lowest cylinder bore limits, in which there are four grades is ·0016 in. (·040 mm.). By means of the grading system the correct piston fit is obtained when pistons are fitted to new cylinder bores having similar grade letters as the pistons. The diameter difference between similar grade letters for the cylinder block and piston is the required clearance for the piston.

Example

Cylinder bore grade 'A'		Piston grade 'A'		Piston clearance
3·2106 in.	—	3·2092 in.	=	·0014 in.
(81·549 mm.)	—	(81·514 mm.)	=	(·036 mm.)
3·2102 in.	—	3·2096 in.	=	·0006 in.
(81·539 mm.)	—	(81·524 mm.)	=	(·015 mm.)
Mean piston clearance is therefore				·001 in. (·025 mm.)

The cylinder grade letters are stamped on two machined bosses at each end of the cylinder block below the level of the cylinder head on the exhaust manifold side, and visible with the cylinder head in place. The piston grade is stamped on the top face of each piston. (See Fig. 30.)

Grade letter diameters are given in the Data Section under "General" and "Pistons".

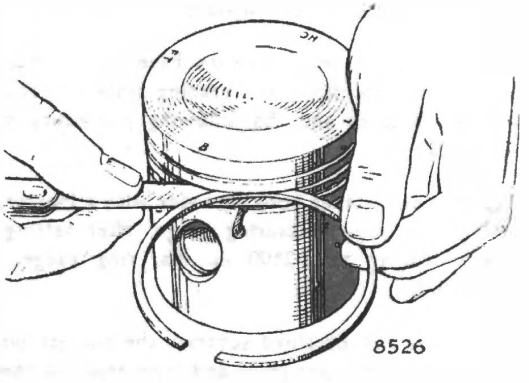

Fig. 29. *Checking piston ring side clearance.*

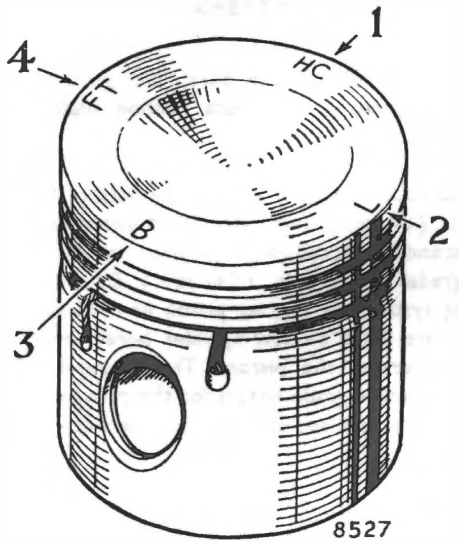

Fig. 30. *Example of piston crown markings.*

Piston crown markings See Fig. 30.

1. HC or LC — COMPRESSION RATIO INDICATION. HC, HIGH COMPRESSION PISTON. LC, LOW COMPRESSION PISTON.
2. L, M or H. — GUDGEON PIN BORE DIAMETER GRADING LETTER L, LOW—M, MEDIUM—H, HIGH.
3. B or A, C, D or E — PISTON DIAMETER GRADING LETTER.
4. FT. — FRONT—MARK SHOWING FITTING POSITION IN ENGINE.

FITTING NEW PISTONS

After a new engine has been run for a few hundred miles the cylinder grade letter sizes no longer apply because the running in process will result in a slight initial increase in cylinder bore diameters.

If, however, a piston or pistons have to be changed under service conditions, the grading system is of considerable assistance and the following procedure must be followed.

1. Check the cylinder bore diameter with a Mercer, or other dial type measuring gauge, after setting its zero reading to 3·2100 in. dia. ring gauge, see Section S.
2. From the size obtained subtract the correct piston clearance previously given and from this size choose a suitable grade of piston.

Example

Bore size given by clock gauge 3·2116 in.

3·2116 in. — ·001 in. = 3·2106 in.

Nearest piston size to 3·2106 is D grade and this would be the piston to use.

Piston clearance cannot be checked by the feeler method because of:—

1. The very close clearance between the piston skirt and cylinder bore.
2. This clearance only exists over a quite narrow part of the piston skirt at its largest diameter.

TO REBORE CYLINDER BLOCK AND FIT OVERSIZE PISTONS

When reboring cylinders to suit oversize pistons each bore is machined to the actual diameter of the piston to be fitted, plus the specified clearance in the bore.

The recommended bore finish is a "cross hatched" hone finish of 20-40 micro inches. This finish is equivalent to that obtained by thoroughly rubbing a used cylinder bore with partly worn No. 1 grade emery cloth to give a matt surface. The cutting tool of the boring machine should be set to bore the maximum diameter of the piston, measured at the bottom of the piston skirt at a right angle to the gudgeon pin, plus its prescribed clearance in the cylinder bore less a small amount for honing.

It is advisable to regrind and reset the cutter after completing each cylinder bore.

Bores must be parallel and round to within ·0004 in. (·01 mm.). The use of a cylinder gauge such as a Mercer, used with a ring gauge, is recommended for taking measurements. Top, middle and bottom of each bore should be checked both in line with and at right angles to the gudgeon pin axis.

SERVICE REPLACEMENT CYLINDER BLOCK

It is normal practice to supply cylinder blocks separately, but a set of suitably graded pistons can be supplied to suit any given block. Cylinder blocks complete with pistons are not serviced under one part number.

It is essential to ensure that each new piston is fitted into a bore of appropriate grade.

CYLINDER LINERS

To fit

These instructions apply to engines which are not fitted with liners during initial assembly. Some engines, however, are fitted with liners during production and these should be dealt with as described under "CYLINDER LINERS — To renew". If the fitting of liners is to prove really successful a high degree of skill on the part of the operator is required, coupled with first-class precision equipment.

If, however, after considerable mileage, it should be decided to install liners, it is absolutely essential that the procedure laid down in the ensuing paragraphs is rigidly adhered to, as otherwise there is every possibility of the operation proving unsatisfactory.

The outside diameter of the service cylinder liner is given in the Data Section under "Cylinder block".

Remove engine from chassis and dismantle.

Measure external diameter of liners.

Measure diameter of bores below piston ring travel.

Bore out the cylinders to suit liners, allowing for the prescribed interference fit of ·002 in.-·004 in. (0·051-0·101 mm.). It is important that the correct figures are strictly adhered to. Every possible precaution must be taken to ensure concentricity and correct size for the full length of the bore.

Finish boring must not be attempted until all liners have been fitted.

Press in liners. To facilitate fitting, a "lead-in" is provided at the lower end of the liner.

When insertng the liners, the load should be released several times during the first inch or so, thus allowing the liner to correct any misalignment.
Press the liner home flush with the top of the cylinder block.

When each of the liners has been treated as above, the liners may be finish bored and honed to suit the new pistons, allowing for piston clearance as previously described.

Cylinder liners may be rebored only up to ·040 in. (1·01 mm.) oversize.

To renew

The method used to remove liners will depend to a great extent on the facilities available. Liners may be drawn or pressed out from the bottom only. Check the cylinder for concentricity and correct size for the full length. If the diameter is in excess of the dimension given on the previous page, the correct interference fit will not be obtained.

Provided the conditions set out above are correct, press in the new liners. Finally, bore and hone the liners to suit the standard pistons.

CRANKSHAFT

Main bearings — to remove and replace

The main bearing shells for these engines are white metal lined and are interchangeable.

Main bearing shells are available in standard size and undersizes as detailed in the General Data Section under "Crankshaft".

If required, the main bearing shells can be removed for inspection, or renewed, provided the crankshaft main bearing journals are not worn or scored, without removing the crankshaft from the engine.

When carrying out this operation the following procedure should be followed:

Drain engine oil.

Remove sump and oil pump.

Remove timing cover.

Remove timing chain tensioner and its support pin. This is necessary because the support pin screws into the front main bearing cap.

Slacken all main bearing fixing bolts one or two turns.

Starting at one end of the crankshaft remove the bottom main bearing cap, and the corresponding top half bearing by pushing it around the crankshaft journal, with a piece of thin metal from the opposite side to its locating lip.

Replace the bottom bearing and cap to support the crankshaft before proceeding to remove the next main bearing cap.

Top half bearings are replaced in a reverse manner to that described for removal. The following points should be noted:

(*a*) Ensure that locating lips engage correctly in their respective recesses.

(*b*) Bearings are stamped according to their sizes and on renewal the same size must be fitted except when an

undersize crankshaft is fitted. In such cases the correct undersize bearings must also be fitted.

(c) When replacing bearing caps particular attention should be given to cleanliness of the mating faces and the oil return thrower recess in the rear main bearing housing.

(d) Before replacing the front and rear main bearings a very small quantity of Wellseal (or other non-setting jointing compound) should be painted onto the sides of the cylinder block recess into which the bearing caps locate. See Fig. 12 under "OIL SUMP — to refit".

(e) Ensure that the front main bearing cap is pulled up against the timing case before fully tightening the front main bearing cap bolts.

As each bearing is tightened up the crankshaft should be turned to ensure that it is free. The correct torque wrench figure for the main bearing bolts is given in the Data Section under "Crankshaft".

Crankshaft end thrust

Crankshaft end thrust is taken by two semi-circular steel washers having bearing metal thrust faces. These faces are easily recognised by the two vertical oil grooves cut across the bearing metal. The washers are fitted with their bearing metal thrust faces towards the crankshaft thrust faces and may be removed by pushing them around the crankshaft centre journal after taking off the centre main bearing caps.

Endfloat of the crankshaft can be checked by using feeler gauges.

The correct endfloat is given in the General Data Section under "Crankshaft".

·005 in. (·127 mm.) oversize thrust washers are available for use with crankshafts which have had the thrust faces reground at each end of the centre main bearing journal.

Crankshaft — to remove

Remove engine from chassis.

Remove cylinder head, push rods and tappets.

Remove timing wheels and chain.

Remove engine front plate and sump.

Remove connecting rods and pistons.

Remove clutch (see Section D) and flywheel.

Remove main bearing cap bolts, and caps.

Lift out crankshaft.

Crankshafts having oval or scored journals should be replaced by factory reground units. These are available in the undersizes given in the Data Section under "Crankshaft". Similar dimensioned undersize main and big end bearings can also be obtained.

Crankshaft — to refit

Check that oilways are clear.

Placing crankshaft in position, checking that top halves of the main bearings and thrust washers (centre) are correctly fitted into the crankcase.

Thrust is taken by two half washers fitted to the side faces of the centre main bearing in the cylinder block.

Fit lower halves of bearings together with main bearing caps.

Replace main bearing cap bolts. Check that the machined front face of the front main bearing cap is in alignment with the machined front surface of the cylinder block.

Tighten bolts to the correct torque given in the Data Section under "Crankshaft".

Check endfloat to crankshaft as previously described.

Reassemble engine to instructions given in foregoing section, and refill sump with fresh engine oil.

Crankshafts — regrinding

The correct, and maximum permissible undersizes are given in the Data Section under "Crankshafts". These must be used when regrinding crankshafts. Not more than ·005 in. (·127 mm.) can be removed from each thrust face at the ends of the crankshaft centre journal.

FLYWHEEL

To remove and refit

Remove gearbox and bell-housing. (See Section E.)

Remove clutch. (See Section D.)

Knock flywheel tabwashers clear of setbolts.

Remove setbolts.

Remove flywheel from crankshaft flange. It will be found expedient to screw a stud of suitable size into the top setbolt hole before levering off flywheel, to prevent the flywehel from falling accidentally with possible damage to the starter ring.

To replace, reverse the above order of operations, observing the following notes:

It is important that the flywheel fits squarely on crankshaft. Should the dowel have come away with the

flywheel when it was removed, tap it out of the flywheel and refit in crankshaft.

Make sure that surface of crankshaft flange and register in the flywheel are perfectly clean and free from burrs, as otherwise the flywheel may not seat properly on the crankshaft.

Tighten set bolts to the torque given in the Data Section and check for run-out at outer edge of flywheel clutch facing. A total clock gauge reading of ·003 in. (·076 mm.) must not be exceeded.

Lock setbolts with new lockwashers.

FLYWHEEL RING GEAR

The starter ring gear is a shrink fit onto the flywheel and can be renewed.

To remove

Using a suitable size drill, drill a hole through the starter ring between the bottom of two of the gear teeth, as deep as possible without entering the flywheel. Split the gear at this point with a sharp cold chisel and lift the split gear off the flywheel, noting that the gear teeth chamfers sides come to the clutch side of the flywheel.

To fit new ring gear

Ensure that the registering faces of the flywheel and starter ring gear are clean and free from burrs.

The new ring gear must be heated in an oven maintained at a temperature of 220°C (428°F) until it has attained this temperature. If the oven temperature exceeds this figure the gear will be softened and wear raidly.

The ring gear must not be heated by a naked flame.

Place the heated ring gear in position on the flywheel with the chamfered sides of the teeth toward the clutch side of the flywheel.

Make sure that the ring gear is bedding against the flywheel so that the ring gear is in its correct position as it cools down.

FLYWHEEL CENTRE BEARING

To remove and refit

The clutch spigot bearing is of self-lubricating bush type, and a push fit in crankshaft end recess. To remove the bush for replacement, use an internal type extractor. An alternative method of removing an old bush is to fill it with grease, then insert a close fitting piece of steel bar. A hammer blow on the end of the bar will then cause the bush to come out. It is most essential that the new spigot bush should be soaked in engine oil for 24 hours before fitting, preferably at room temperature.

The new bush should be pressed into position until flush with the rear face of the crankshaft flange.

CLOSED CRANKCASE VENTILATION SYSTEM

This crankcase ventilation system is fitted to the engines of cars supplied to areas where regulations forbid the discharge of crankcase fumes direct into the atmosphere.

Description — See Fig. 31

The system consists of three items which are:

A regulating valve screwed into the inlet manifold.

A flame trap.

Three connecting hoses.

The regulator valve outer end is connected by one hose to either the oil filler tube on the rocker cover or the tappet chamber cover plate.

The flame trap is connected by a hose to a connection on the carburettor and by another hose to whatever point is used for the entry of clean air into the engine crankcase.

Operation — See Fig. 31

When the engine is idling inlet manifold depression is high enough to draw the regulator valve (2) onto its seat (4) in the regulator body so that only a small amount of air can pass through the valve (2).

As the throttle is opened, while the engine is running, inlet manifold depression decreases and the spring (3) lifts the valve (2) from its seat. This allows crankcase fumes and air to be drawn into the inlet manifold, and clean ventilating air to pass from the carburettor intake through the flame trap into the engine. INCORRECT OPERATION OF THIS VALVE CAUSES BAD IDLING.

Servicing

This must be carried out at the recommended intervals given in the owner's handbook or more frequently where short journeys or slow speed driving are usual.

Neglect of servicing will cause sludge and water formation inside the engine which will increase engine wear.

Regulator valve — cleaning

Dismantle and check the condition of the valve seat (4) and valve (2).

If they are worn a new regulator valve assembly should be fitted.

The condition of the spring (3) is very important as it controls the opening and closing of the valve (2) against

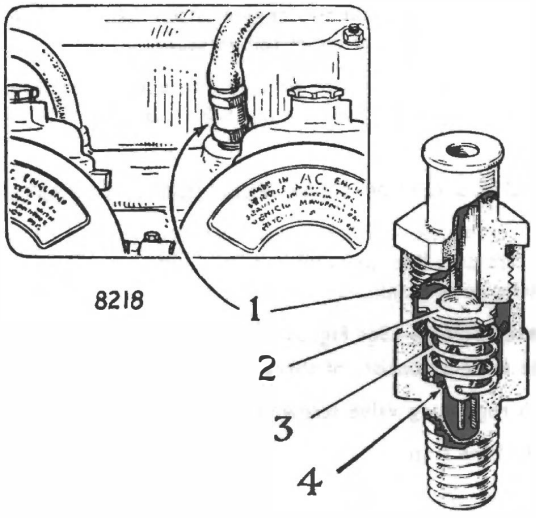

Fig. 31. *Crankcase ventilation valve—used with closed crankcase ventilation system.*

inlet manifold vacuum. If damaged or corroded it must be replaced.

When re-assembling the valve unit, make sure that the spring (3) is correctly located in the body and that the valve (2) is not tilted across the body.

Regulator valve — testing

Refit the valve unit to the inlet manifold leaving the connecting hose off of the valve unit inlet end.

1. Using a short rod, push the valve (2) downward against its seating. Then remove the rod and check that the valve moves away from its seat under the action of the spring (3). This check is made with the engine stationary.
2. Run the engine and check that it idles correctly. When idling it should be possible to push the valve (2) hard against its seat without altering the slow running performance.
3. Open the throttle quickly to bring the engine speed up to about 3000 r.p.m. and then release the throttle. SUDDEN CLOSING OF THE THROTTLE SHOULD ALLOW THE ENGINE TO IDLE CORRECTLY.
4. If correct operation of the ventilation valve cannot be obtained the spring (3) should be renewed or the complete valve changed. The springs are very sensitive. THEY MUST NOT BE STRETCHED OR FULLY COMPRESSED.

Connection hoses

If necessary these should be removed and cleaned internally.

Flame trap

The flame trap should be washed in kerosene (paraffin) and inverted so that it drains dry. It is positioned so that any oil passing into it can drain back into the engine.

ENGINE — Removal procedures

The engine can be removed by unbolting it from the clutch bell housing leaving the gearbox in position.

It is also possible to remove the engine and gearbox as a complete unit. This is sometimes the longer of these two methods.

On cars fitted with automatic transmission the engine and automatic transmission must be removed as a complete unit.

To remove engine — leaving gearbox in position

Work underneath car

Drain engine sump.

Disconnect exhaust pipe(s) from exhaust manifold flange and loosen clip holding the other end of pipe. Remove pipe(s).

Unbolt clutch operating cylinder from clutch bell housing and move cylinder aside. Do not disconnect hydraulic feed pipe.

Remove both brackets connecting clutch bell housing to sump face fixing bolts, and fuel pipe fixing clip.

Remove cover plate from clutch bell housing behind rear end of sump.

On cars fitted with steering column gear change, disconnect linkage as required.

Work under bonnet

Drain cooling system with heater control in the HOT position.

Mark around both bonnet hinges with pencil to assist replacing bonnet in similar position.

Remove hinge fixing bolts and lift off bonnet.

Disconnect and remove battery.

Disconnect top and bottom water hoses from engine ends.

Remove four bolts holding radiator to its mounting position and lift out radiator.

Remove fan belt, fan blades and fan pulley.

Disconnect throttle and choke operating mechanism, heater hoses at water pump and cylinder head connections, and generator leads or alternator leads.

Disconnect lead from water gauge connection.

Remove air intake silencer.

Disconnect oil gauge pipe (if fitted) and fuel feed pipe to fuel pump. Blank fuel pipe if needed.

Attach lifting chains so that engine weight is taken above centre of rocker cover and raise engine just enough to allow removal of front engine mounting rubbers.

Lower engine so that crankshaft pulley is only just clear of the front crossmember.

Remove two top bolts holding clutch bell housing to engine.

Raise engine to its normal position and remove remaining bolts holding clutch bell housing to engine.

Carefully draw engine forward to withdraw gearbox stem wheel shaft spline from the clutch centre plate.

Lift out engine.

To refit engine — with gearbox still in position

This is a reversal of the removal procedure. Care should be taken to ensure that the engine and clutch bell housing faces are in line and parallel before attempting to slide the clutch centre plate splines onto the splines of the gearbox stem wheel shaft. If necessary, the engine can be turned by using a spanner on the starting handle dog nut.

The engine should be refilled with the correct grade of oil and the oil level checked again after running the engine, as about 1 pint (·56 litres) of oil will be taken to fill the oil filter and oilway passages.

If a steering column gear change is fitted its action should be checked after refitting the linkage. The correct method of adjustment is given in Section E.

To remove engine — with gearbox attached

Work inside car

Remove front carpet and gear shift lever. (Centre gear shift only).

Work under car

Drain engine sump and gearbox.

Disconnect exhaust pipe(s) from exhaust manifold flange and loosen clip holding the other end of pipe. Remove pipe(s).

Unbolt clutch operating cylinder from clutch bell housing and move cylinder aside. Do not disconnect hydraulic feed pipe.

On cars fitted with steering column gear change, disconnect linkage as required.

Disconnect propellor shaft at rear axle pinion flange and carefully withdraw shaft from gearbox. Protect gearbox end of propeller shaft by wrapping with clean paper.

Remove bolts passing through the gearbox mounting rubber and crossmember.

Support gearbox weight by means of a trolley jack pushed under the car from end. The jack crutch should take the weight on the gearbox drain plug.

Remove crossmember at rear of gearbox by taking out its four fixing bolts, two each side.

Work under bonnet

Drain cooling system with heater control in the HOT position.

Mark around both bonnet hinges with pencil to assist replacing bonnet in similar position. Remove hinge fixing bolts and lift off bonnet.

Disconnect and remove battery.

Disconnect top and bottom water hoses from engine ends.

Remove four bolts holding radiator to its mounting position and lift out radiator.

Disconnect throttle and choke operating mechanism, heater hoses at water pump and cylinder head connections, and generator or alternator leads.

Disconnect lead from water gauge connection.

Remove air intake silencer.

Disconnect oil gauge pipe (if fitted) and fuel feed pipe to fuel pump. Blank end of fuel pipe if needed.

Attach lifting chains so that engine weight is taken at the front end and the engine with gearbox attached will hang at about 45° from the vertical.

Gradually lower gearbox end of unit by lowering the jack and pulling it forward at the same time raising the front of the engine.

Lift out engine.

To replace engine — with gearbox attached

The engine unit should hang at about 45° from the vertical and when lowered far enough into position the jack should be used to gradually raise the gearbox end while the front end of the engine is lowered into position as the trolley jack is pushed backwards.

Coupling of controls, etc., is a reversal of the removal procedure.

The engine should be refilled with the correct grade of oil and the oil level checked again after running the engine, as about 1 pint (·56 litres) of oil will be taken to fill the oil filter and oilway passages.

Refill gearbox.

If a steering column gear change is fitted its action should be checked after refitting the linkage. The correct method of adjustment is given in Section E.

IGNITION SYSTEM

Page

DESCRIPTION
—Primary circuit .. 39
—Secondary circuit .. 39
OPERATION .. 39
USEFUL INFORMATION
—Contact breaker .. 39
—Ignition coil operation .. 39
—Ignition coil primary connections .. 39
—Condenser .. 40
—Ballast resistance unit .. 40
—Ignition timing requirements .. 40
—Sparking plug—general information .. 40
—Gap .. 40
—Operating temperature .. 40
—Heat range .. 41
—Corona discharge .. 41
IGNITION FAULT DIAGNOSIS
—Test equipment .. 41
—Fault tracing 41
—Primary circuit tests .. 43
—Contact breaker points .. 44
—Inspection .. 44
—Cleaning .. 44
—Gap adjustment .. 44
—Breaker point spring tension .. 44
—Coil and condenser—testing .. 45
—Secondary circuit tests .. 45
—Preliminary checks .. 45
—High tension leads—continuity tests .. 45
—Rotor arm
—Testing insulation .. 45
—Gap clearance .. 46
—Distributor cap
—Tracking .. 46
—Distributor cap resistor .. 46
SPARKING PLUGS
—Removal .. 47
—Examination .. 47
—Cleaning and testing .. 47
IGNITION TIMING
—Timing adjustments .. 47
—Contact breaker gap—effect on timing .. 48
—Timing marks on crankshaft pulley .. 48
—Checking ignition timing
—Static method .. 49
—With stroboscopic timing light .. 49
—Checking centrifugal and vacuum advance .. 50
Method 1—Rapid visual check 50
Method 2—At, or up to 3500 r.p.m. 50
Method 3—With distributor removed from engine 52
—Road performance test .. 52
—Testing for air leaks in vacuum advance system 53

DISTRIBUTOR Page

—Identification 53
—Amount of centrifugal and vacuum advance 53
—Overhaul—dismantling 55
—Bearing replacement 55
—Reassembly 56
—Replacing contacts 56
—To remove and refit 56
—To fit replacement distributor 56

IGNITION SYSTEM

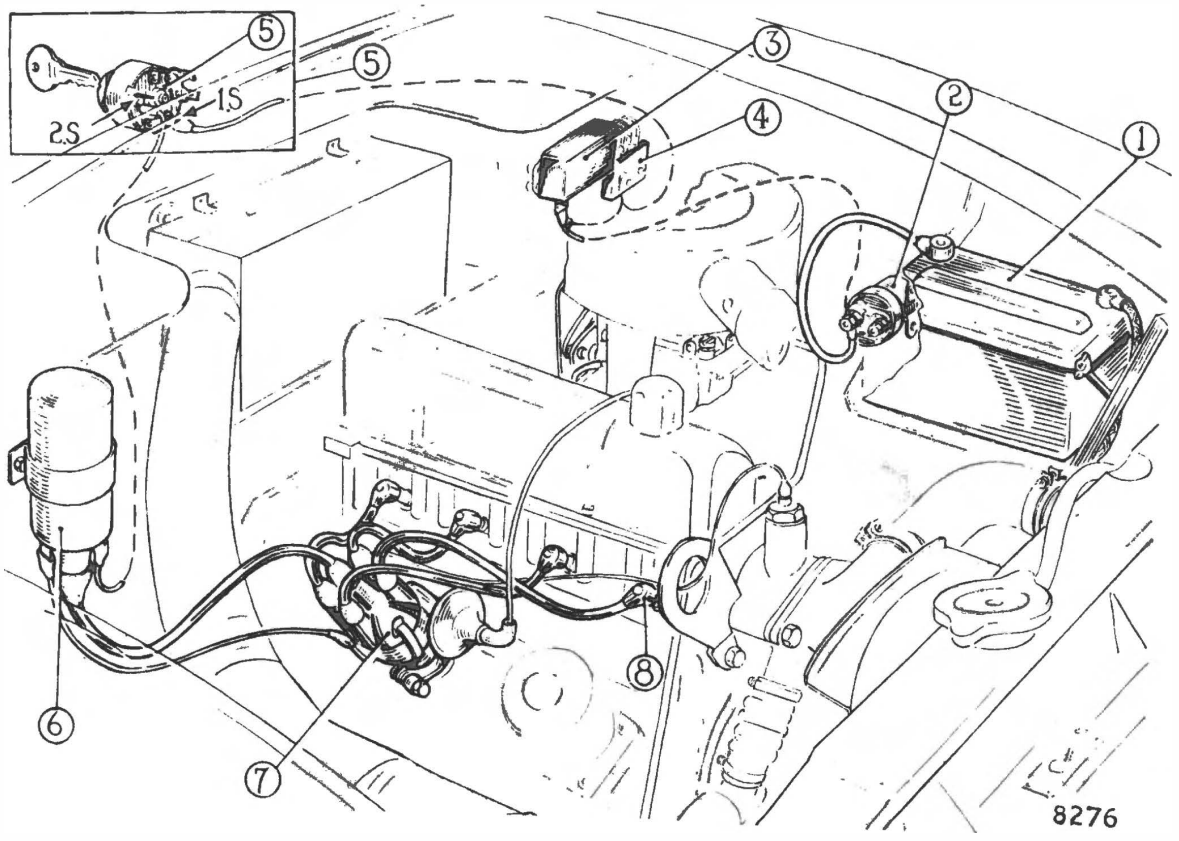

1. BATTERY
2. STARTER SOLENOID
3. CONTROL UNIT
4. FUSE UNIT
5. IGNITION SWITCH
6. IGNITION COIL
7. DISTRIBUTOR
8. SPARKING PLUGS

- - - - - - PRIMARY CIRCUIT TO COIL *(without ballast resistance)* 1S *and* 2S — IGNITION SWITCH TERMINALS

Fig. 32. *Typical ignition system*

DESCRIPTION

The ignition system contains two electrical circuits. These are the low voltage or low tension primary circuit and the high voltage or high tension secondary circuit.

These circuits connect the following list of components shown in Figs. 32 and 34.

Primary circuit (low voltage)

1. Battery to,
2. Ignition switch to,
3. Ballast resistance (if used) to,
4. Primary winding of ignition coil to,
5. Contact breaker points and condenser inside distributor to,
6. Earth return to battery.

Secondary circuit (high voltage)

1. Secondary windings of ignition coil by HT lead to,
2. Distributor cap via carbon brush to,
3. Distributor rotor via air gap to,
4. Leads from distributor cap to,
5. Sparking plugs to,
6. Earth return to battery and thence to ignition switch, primary winding to coil secondary winding.

OPERATION

When the ignition is switched on, current from the battery flows through the ignition switch to the coil primary terminal, to which the wire from the switch is connected, through the coil primary winding, and then from the other coil primary terminal to the LT terminal on the distributor and through the contact breaker points WHEN CLOSED, to earth.

Each time the contact breaker points open the current flow to the coil primary winding is interrupted. This induces a very high voltage in the coil secondary winding which is fed through the distributor rotor and spark plug leads, in the correct firing sequence, to the sparking plugs.

More particulars of the ignition system components are given in the following paragraphs.

DETAILS AND USEFUL INFORMATION

Contact breaker—Operation, four cylinder engines

A four lobed cam, running at half engine speed, opens the contact breaker points after allowing them to remain closed for intervals of 60° cam rotation. During this period, known as the DWELL ANGLE, current passes through the ignition coil primary windings to create the magnetic field required to induce the very high voltage, in the secondary winding, when the contact breaker points open.

On four cylinder engines, covered by this section, ignition occurs at 180° intervals of crankshaft rotation. This becomes 90° intervals of distributor rotation because the distributor runs at half engine speed.
The small angular tolerance allowed on the ignition phasing intervals and dwell angle intervals are given in the Data Section under ignition.

Ignition coil — Operation

The ignition coil acts as a transformer, to increase the battery voltage, to an amount that can jump the distributor rotor and sparking plug gaps, under compression.

The ignition coil has a low voltage (low tension) primary winding, a high voltage (high tension) secondary winding, and a laminated soft iron core that provides a magnetic field whenever battery current flows through the primary winding. This occurs during the "Dwell angle" period while the contact breaker points are closed, when the ignition is switched on. Directly the contact breaker points open battery current flow is interrupted and the primary windings immediately cease to magnetize the laminated iron core. The rapid collapse of the magnetic field induces a very high voltage in the secondary winding that can amount to 20,000 volts (20 KV) on open circuit when a plug lead is disconnected from its particular sparking plug.

With clean, correctly set sparking plugs and a normal rotor gap about 12,000 volts (12 KV) is needed to jump the combined plug and rotor gap, when the engine is running and the plugs firing under compression.

Ignition coil — primary connections

Most coils have their primary terminals marked CB (contact breaker) and SW (switch wire), and provided the coil is the one specified for the vehicle the terminals are connected according to their markings; that is, the

lead from the ignition switch to SW and the lead to the distributor to CB.

If a coil, with CB and SW terminal marking, specified for positive earth, has to be used on a negative earth wiring system, the primary connections have to be reversed; that is the switch wire will be connected to the CB terminal and the distributor LT lead to the SW terminal. Some coils have terminals marked + and —. These are used with both positive and negative earth return systems. The terminals are connected to suit the particular earth polarity with which the coil is used. With positive earth the + terminal is connected to the distributor LT terminal. With negative earth + is lead from the ignition switch.

Condenser

The condenser is changed by the current surge in the primary circuit, and the current induced in the primary winding, by the collapse of the coil magnetic field, when the contact breaker points open. This action prevents excessive arcing at the contact breaker points. Peak voltage reached in the condenser can amount to 300-400 volts.

Immediately after the coil HT discharge has been made the condenser discharges through the primary winding in the OPPOSITE direction to the primary current flow. This assists in the rapid demagnetising of the laminated iron core and ensures that the coil gives its maximum output from its secondary winding.

An additional condenser (capacitor) must never be connected to the distributor LT terminal. If this is done excessive pitting and burning of the contact breaker points will occur.

Ballast resistance unit

This unit is fitted to cars exported to territories where extremely cold starting conditions occur. It is used with a 7 volt coil and under all running conditions, other than starting, reduces the battery voltage to 7 volts. While the starter motor is operating, and the battery voltage reduced to approximately 9 volts due to the heavy current discharge through the starter, a pair of contacts inside the starter solenoid shorts out the ballast resistance. This allows a 9 volt feed to the 7 volt coil which causes the coil to give a very high output needed for starting under adverse conditions while the starter is operating. Directly the engine starts and the solenoid switch is opened, the ballast resistance comes back into the primary circuit and the voltage fed to the coil is reduced to 7 volts.

Ignition timing requirements

The correct timing of the spark, occurring at the sparking plug gap(s), as the high voltage from the coil secondary discharges when the contact breaker points open, depend upon the following:

Static ignition timing

This is the number of CRANKSHAFT DEGREES at which contact breaker points open before the top dead centre (BTDC) position, when the engine is rotated by hand, or by the starter. The methods of setting the ignition timing are given under CHECKING THE IGNITION TIMING.

Centrifugal advance

This is given by a weight and spring mechanism, situated below the contact breaker, that increases the ignition advance, as needed, with increase of engine speed.

The mechanism is connected to the distributor cam spindle. As engine speed increases the two weights move outwards, by the action of centrifugal force, and advance the cam spindle. When the engine speed is reduced the centrifugal force decreases and the weight control springs return the weights and retard the cam spindle.

Vacuum advance

A unit, containing a vacuum operated diaphragm, is situated on the upper front end of the distributor. It increases the ignition advance under small throttle opening conditions. This is necessary to enable the weaker part throttle mixture to be properly ignited under the lower compressions pressures caused by the partly opened throttle.

The diaphragm is linked to the contact breaker mounting plate which it advances when the vacuum is high enough to overcome the diaphragm return spring.

The diaphragm unit is connected by a small bore pipe to a drilling in the carburettor body immediately above the throttle edge in the idle position, so that THE VACUUM ADVANCE CANNOT OCCUR WHEN THE ENGINE IS IDLING.

Sparking Plugs — General Information

Gap

The sparking plug gaps, when correctly set, ensure good ignition under all conditions of engine operation. If the gaps are set, or become too wide, misfiring can occur and cold starting may become difficult. Plug gaps set too close can cause rough idling and misfiring.

Operating temperature

Sparking plugs that run too cold will become fouled with combustion deposits under town driving conditions, and plugs that run too hot will fail under hard motorway

driving. These failures can also be caused by engine faults producing conditions that the plugs cannot withstand.

Sparking plug temperature is controlled by the construction of the plug insulator, particularly inside the plug body. The insulator of a correct plug, operating under conditions for which the plug was chosen, will allow sufficient heat flow to give the plug a normal life, and also retain enough heat to keep the plug insulator clean inside the plug body. This ensures that the sparking plugs will operate correctly for their recommended servicing period.

Heat range

Sparking plug manufacturers grade their plugs into "cold" and "hot" or "hard" and "soft" ranges. From these a suitable plug is chosen as specified in the Data Section under Ignition.

Corona discharge

This discharge can only be seen in darkness and must not be mistaken for HT discharge shorting across the sparking plug insulator. When occurring, it is seen as a faint blue light in the plug insulator above the plug metal body, and is caused by the HT field in the plug insulator.

Corona discharge can repel dust particles from the plug insulator so that a clean band is seen around the insulator above the plug body. It is a mistake to think that this is an evidence of gas leakage past the insulator IF the clean band on the insulator is caused by this discharge.

IGNITION FAULT DIAGNOSIS

Ignition system troubles are caused by a failure in the primary and/or secondary circuit, faulty operation of the sparking plugs or incorrect ignition timing.

Excessive resistance, anywhere in the low volatge circuit will lessen the output of the coil secondary winding causing poor performance and difficult starting.
Possible faults in the ignition system, and the effect that they have on engine performance are shown on the adjoining page.

Ignition timing, centrifugal, and vacuum advance checking are explained under IGNITION TIMING.

Test equipment

While it is possible to adjust and service the ignition system with hand tools, and the substitution of new parts for suspected parts, quicker and more reliable results are obtained when instruments are used.

The minimum equipment needed for thorough checking of the ignition system is:

Voltmeter — with reading range of 0 - 2 and 0 - 20 volts.

Tachometer — for checking engine speed.

Stroboscopic timing light — for checking ignition timing, centrifugal, and vacuum advance.

Small vacuum gauge — for checking vacuum advance vacuum.

Adjustable spark gap — this is more convenient to use than holding an HT lead close to earth when checking the HT spark intensity. It can be made in Dealers' Workshops. See Fig. 33.

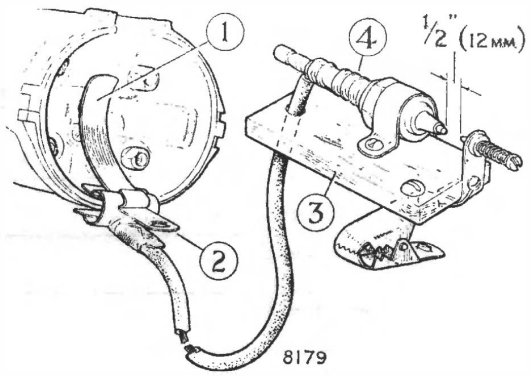

1. STEEL CONTACT STRIP
2. PAPER CLIP
3. HARDWOOD BASE
4. SPARKING PLUG—WITH THREADED END CUT AWAY

Fig. 33. *Adjustable spark gap*

The ideal equipment is an oscilloscope and other test instruments built into a complete portable unit like the "Motoscope" made by Crypton Equipment Ltd., Bridgwater, England. All makers of this class of equipment provide very comprehensive instructional and operating manuals explaining its advantages and use. Such equipment is particularly useful for tracing HT faults, testing the coil and condenser, and checking the distributor in position on the engine. It also provides the quickest and best means for checking the ignition system after overhaul, or predelivery checking of new or serviced vehicles.

Fault diagnosis and tracing

A breakdown or excessive voltage drop in the primary circuit can be caused by:

1. Burnt or incorrectly adjusted contact breaker points.
2. Faulty wiring, loose or dirty connections.
3. Faulty ignition switch.
4. A defective ignition coil.

A breakdown or loss of electrical energy in the secondary circuit can be caused by:

1. Fouled, worn, or improperly adjusted spark plugs.
2. A defective condenser.

IGNITION FAULTS

CAUSES	EFFECTS								
IGNITION FAULTS	Cranks but will not run	Starts but will not keep running	Misfires	Idling rough	Acceler-ation poor	Power and top speed down	Excessive fuel con-sumption	Pinking	Overheats
Discharged or defective battery	★		★						
Contact breaker points in-correctly set	★	★	★	★	★	★	★	★	★
Contact breaker points need cleaning or renewing	★	★	★	★	★	★	★	★	★
Sparking plugs need cleaning or renewing	★	★	★	★	★	★	★	★	★
Static ignition timing incorrect	★			★	★	★	★	★	★
Centrifugal advance not func-tioning correctly				★	★	★	★	★	★
Vacuum advance not func-tioning correctly							★	★	
Worn distributor cam or spindle bush				★	★	★	★	★	
Coil or condenser defective ..	★	★	★	★	★	★	★		★
Open circuit in ballast resist-ance (if fitted)		★							
HT leak on coil, distributor rotor or distributor cap ..	★	★	★						
HT lead(s) — open circuit ..	★								
HT leads incorrectly connected	★	★	★						
LT circuit—open circuit, faulty ignition switch, or high resist-ance or loose connections ..	★	★	★	★	★	★	★		★

★ = POSSIBLE EFFECT(S)

3. Defective high tension leads.
4. High tension leakage across the coil, distributor cap or rotor.
5. A defective coil.

The following method can be used to find in which circuit(s) the fault(s) occur.

1. Remove the distributor cap from the distributor.
2. Hold the bared end of a short length of HT wire onto the centre carbon brush that contacts the distributor rotor. A short rubber sleeve on the distributor end of the HT lead will help to keep the lead in position against the carbon brush. Hold the other end of this HT lead about $\frac{3}{16}$ in. from the cylinder head, or connect to a spark gap earthed on the engine cylinder head. See Fig. 33.
3. With the ignition switched on, rotate the engine with the starter motor and watch for a spark from the HT lead to the cylinder head, or across the spark gap.

If there is no spark, or a weak or short spark, the trouble is in one or more of the following: the Contact breaker points, condenser, HT lead from the coil to the distributor cap, the wiring in the primary circuit, or a defective coil. If the spark is satisfactory the trouble lies in the secondary circuit from the distributor to the sparking plugs not forgetting that it may be damp or tracking INSIDE the distributor cap.

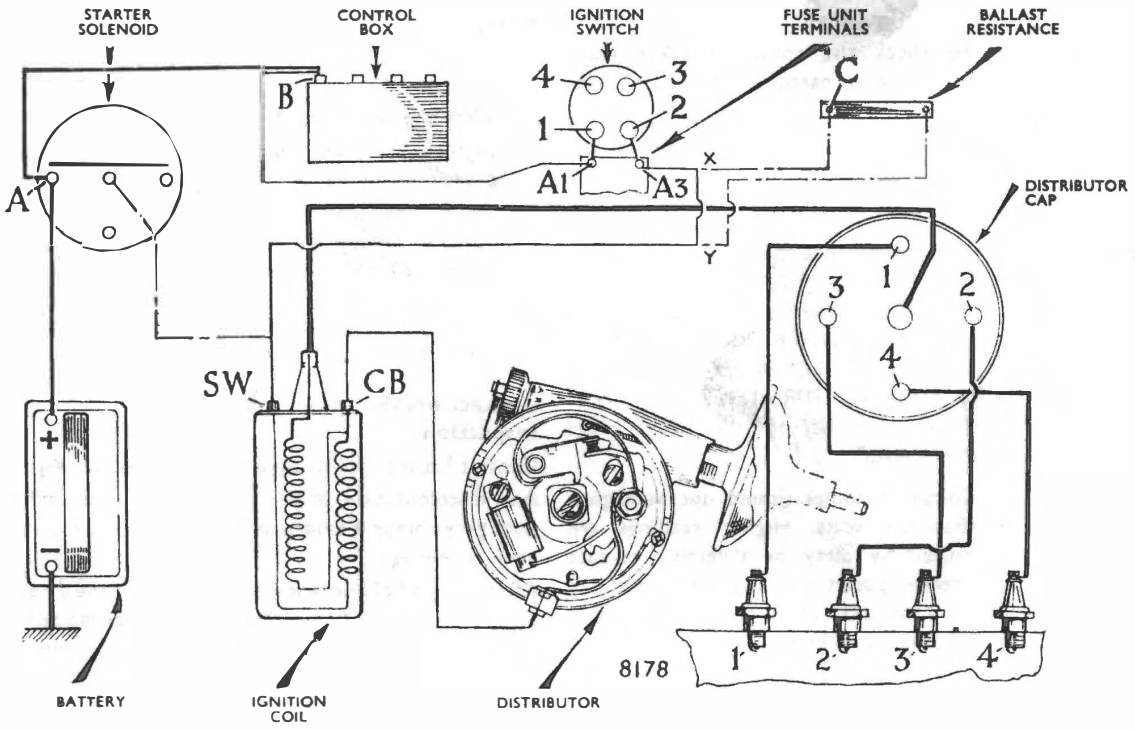

CIRCUIT ADDITIONS FROM X TO Y WHEN BALLAST RESISTANCE IS FITTED

Fig. 34. *Ignition system —showing voltmeter connection points for testing primary circuit*

Primary circuit tests — See Fig. 34

A complete check of the primary circuit can be made with a voltmeter having a range of 0-2 and 0-20 volts.

These tests find any excessive voltage drop in the primary circuit that will reduce the ignition coil HT output and cause difficult starting or poor performance.

Test 1

Purpose	To check voltage at the coil switch wire terminal when the ignition is switched on and the contact breaker points are closed.
Test connections	Voltmeter leads to coil SW terminal to which the switch wire is attached, and to earth, and a jumper lead connecting the distributor LT lead terminal to earth.
Results	Without a ballast resistance — 11·7 volts. With a ballast resistance — 7 volts. Lower readings are caused by defective battery, loose or high resistance connections, defective wiring, or faulty ballast resistance (if fitted).

Test 2

Purpose	To check voltage at coil under starting conditions.
Test connections	As for Test 1. The jumper lead is used to ensure that possible resistance in the contact breaker points or faulty earthing of the fixed contact point does not affect the voltage reading, and prevents the engine from starting.
Correct result	When the starter is turning the engine with the ignition switched on, the voltmeter reading should not be less than 9 volts. A lower reading indicates either a weak battery, defective cables or connections, or a faulty starter motor taking excessive current causing an abnormal volt drop.

Test 3

Purpose — To check the contact breaker point resistance and earthing of the distributor.

Test connections — Voltmeter leads to distributor LT terminal and cylinder block CONTACT BREAKER POINTS CLOSED and ignition switched on.

The voltage should be first checked in the 0-20 volt range of the meter, to see if it is below 2 volts, before using the 0-2 volt range. CONTACT BREAKER POINTS MUST ALWAYS BE VISUALLY INSPECTED BECAUSE IT IS POSSIBLE FOR EVEN BADLY WORN POINTS TO CONTACT WITHOUT HIGH RESISTANCE.

Results — Voltage readings should not be higher than 0·2 volts. Higher readings are caused by dirty or defective contact breaker points or faulty earthing of the fixed contact, contact mounting plate, or distributor body.

Test 4

NOTE — This test is only needed when incorrect voltage readings were obtained in tests 1, 2 and 3.

Purpose — To locate any volt drop in primary circuit found in tests 1, 2 and 3.

Test connections — The voltmeter is connected to the engine cylinder block and to the ignition system terminals in the alphabetical order shown in Fig. 34. At the same time terminals should be checked for tightness because correct voltmeter readings are not an indication that terminals are tight.

Voltmeter connections Battery + and —	**Correct voltage** Not less than 12·4 volts.
Live terminal A on starter solenoid and cylinder block.	12·2 volts with ignition ON and jumper lead earthing distributor LT terminal.
Terminal B or A1 on regulator and cylinder block.	12 volts with ignition switched ON and jumper lead from distributor LT terminal to earth.
Terminal C. on ballast resistance (if fitted) and cylinder block.	11·7 volts with ignition switched ON and jumper lead from distributor LT terminal to earth.
Terminal SW on coil and cylinder block.	6·7 volts if ballast resistance is fitted. 11·7 volts without ballast resistance — with ignition switched ON and jumper lead from distributor LT terminal to earth.
C B terminal on coil and cylinder block.	0·2 volts maximum with ignition switched ON AND CONTACT BREAKER POINTS CLOSED and JUMPER LEAD REMOVED.

NOTE

1. The jumper lead is used to ensure that possible resistance in the contact breaker points does not affect the voltmeter readings.
2. Jumper lead must have enough current carrying capacity to prevent it affecting voltmeter readings.
3. The ballast resistance reduces the battery voltage to about 7 volts when the contact breaker points are closed. If a voltage reading is taken at the coil SW terminal with the contact breaker points open, battery voltage will be recorded, due to the very small current flow taken by the voltmeter.

Contact breaker points

Inspection

Contact breaker points should be removed for inspection.

Any discolouration of the points other than a frosted slate grey colour is evidence that the points are burnt and need renewing.

After a period of operation one point will have a "pip" on it and the other a "crater" into which the pip fits when the points are closed. This is known as "pitting and piling" and is caused by metal transfer due to slight arcing. Metal transfer should not exceed the gap setting given in the Data Section under "Ignition".

Excessive pitting or burning is caused by:

1. Incorrect point alignment or insufficient contact area.
2. Voltage regulator setting too high.
3. Radio condenser fitted between coil CB termina! and distributor.
4. Condenser of incorrect capacity, probably due to fitting a spurious or non standard replacement.

Cleaning

Contact points can be cleaned with a fine oil stone. The "pip" should be stoned off but no attempt should be made to remove the "crater". After cleaning the contacts must meet over a large area. This is important. If the points contact over a very small area overheating, burning and arcing will occur.

Gap adjustment

The distributor breaker points must always be cleaned before adjusting the gap with a feeler gauge. If this is not done, the "pip" on one of the points will rest on top of the feeler blade and a wide setting will be obtained. The contact breaker point gap setting is given in the Data Section under "Ignition".

Breaker point spring tension

After refitting the breaker points and adjusting their gap the moveable point spring tension should be checked as shown in Fig. 35.

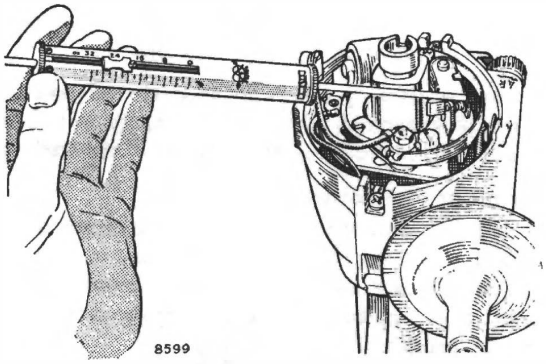

Fig. 35. *Checking contact breaker spring tension*

Because reliable spring balance readings cannot be obtained by visually observing when the contact breaker points open, a small 12 v. bulb should be used to indicate point opening. This bulb should be connected between the distributor LT lead and distributor terminal. In this position it will light when the contact breaker points are closed when the ignition is switched on. The spring balance reading should be taken immediately the bulb goes out.

If necessary, the moveable point spring can be set, at the left-hand end of the broken lines shown in Fig. 36, to obtain the correct spring tension.

Excessive spring force will cause rapid contact heel wear and consequent closing of the point gap. Too little spring force will allow the points to bounce and cause misfiring at high engine speed.

The moveable contact spring tension is given in the Data Section under "Ignition".

A suitable push type spring balance can be obtained from Geo. Salter & Co. Ltd., West Bromwich, England, under part number M.52324.

Coil and condenser — testing

Suitable test equipment is needed for testing the coil and condenser. If this is not available these items can only be checked by substituting new ones.

Should the HT spark appear to be weak or thin after the ignition circuits have been proved satisfactory, a new condenser should be fitted. If this makes no improvement a new coil should be tried. The condenser is the more likely to fail.

Secondary circuit — examination and tests

Preliminary checks

1. Inspect all HT leads for looseness or corrosion at terminal ends, breaks, and cracked insulation. Replace all defective leads.
2. Clean the inside and outside of the distributor cap and inspect for cracks, excessively erroded contacts inside the cap, and for signs of "tracking" between the contacts or from the centre carbon brush area.
3. Inspect the rotor for cracks and excessive burning on the end of the brass arm. Replace the rotor arm if it appears defective.

High tension leads — continuity tests

All types of high tension leads should be checked for continuity with a 12 volt supply. This detects any breaks however small. The use of HT current to check these leads is not a satisfactory method of testing because the HT current can jump any minor break and the lead will appear to have continuity. The break then burns wider and causes misfiring.

The high resistance type of HT lead, fitted to prevent radio and television interference, should be tested for continuity by putting the lead in series with a voltmeter —having a range of 0—20 volts and internal resistance of not less than 2000 ohms—and a 12 volt supply. The readings obtained with a good lead depend upon the lead internal resistance and the internal resistance of the voltmeter, and only prove that continuity exists.

Voltmeters having a high internal resistance give a high reading but cheap voltmeters with low internal resistance give too low a reading to be of use for this test.

Voltmeters fitted to Crypton or Suntester diagnosis equipment are suitable for making this test.

Rotor arm — testing insulation

The rotor can be checked for insulation in the following manner.

1. Remove distributor cap and attach a test length of HT cable, having a suitable rubber sleeve at one end, to the carbon brush holder inside the distributor cap. Electrical contact must be made to the carbon brush.
2. Turn the engine so that the contact breaker points are closed. Switch on the ignition and while opening the contact breaker points with a pencil hold the free end of the HT lead $\frac{3}{16}$ in. from the engine cylinder

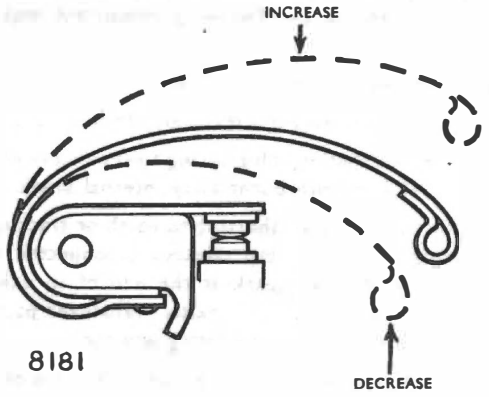

Fig. 36. *Directions for increasing, or decreasing, contact breaker spring tension*

block. A spark should occur each time the points are opened. THIS IS DONE TO PROVE THAT HT CURRENT IS AVAILABLE FOR THE ACTUAL TEST.

3. With the rotor in position on the distributor, hold the free end of the test HT lead about $\frac{1}{16}$ in. from the end of the rotor metal arm. Open the contact breaker points. NO HT SPARK SHOULD BE SEEN. If any spark is seen it is an indication that there is a leak path for HT current through the insulation of the rotor arm.

Rotor arm gap

Up to 3 KV (3000 volts) is needed to jump the ·020 ins. (·50 mm) gap between the rotor end and the HT pick up electrodes moulded into the distributor cap. This gap increases due to the erosion caused by the passage of the HT current and when it becomes excessive can cause intermittent misfiring at high engine speeds under wide throttle opening.

Badly eroded distributor caps or rotors should always be replaced.

When checking the ignition system with equipment that incorporates an osciloscope, the coil KV output to jump the rotor gap and sparking plugs, under compression, is seen as vertical "traces" representing about 12 KV. If a plug lead is removed and earthed the "trace" for this cylinder will be reduced to about a quarter of the previous height, because the HT current has only the rotor gap to jump. This trace height should be about 3 KV. A higher trace shows that there is excessive high resistance caused by a wide rotor gap or a break in the HT lead from the coil or to the plug from which the lead was disconnected.

Distributor cap — tracking and shorting

The HT current, feed to the distributor rotor, will always take an easier path to earth, than across the rotor gap and sparking plug gap UNDER CYLINDER COMPRESSION, when any of the following conditions make it possible.

1. Moisture inside or outside of the distributor cap.
2. Dust and fine metal particles inside the distributor cap.
3. A burnt out sparking plug having a very excessive gap, or an HT lead with burnt away internal break.

These faults allow either shorting to earth or tracking to a preceding distributor cap electrode, connected to a sparking plug that can spark at the end of an exhaust stroke, when no compression exists. Whatever happens obvious misfiring or difficult starting will occur.

Tracking can sometimes cause a burn mark inside the distributor cap. When this is seen a new cap should be fitted. If a new cap is not immediately available the burnt track must be scraped away as a temporary measure only, and a new cap obtained as soon as possible.

The cause of tracking will be found in the HT lead and sparking plug (and radio interference suppressor if fitted) in the HT circuit from the BEGINNING of the tracking.

Distributor cap resistor

This resistor forms the upper part of the carbon brush that contacts the distributor rotor. It is used to meet the regulations made to minimise television interference from the ignition system and must never be replaced by a plain all carbon brush.

SPARKING PLUGS

The correct type of sparking plug to use is given in the Data Section under "Ignition".

Sparking plugs should be removed, examined, cleaned and adjusted at the recommended intervals.

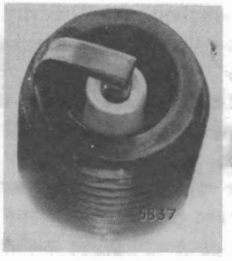

Fig. 37

Fig. 38

Fig. 39

Fig. 40

Fig. 41

Removal

Before removal the area around each plug should be cleared with a dry brush or compressed air to ensure that nothing can enter the cylinders, as the plugs are removed.

Examination—See Figs. 37—41

NORMAL CONDITION — Look for powdery deposits ranging from brown to greyish tan. Electrodes may be slightly worn. These are signs of sparking plugs used under normal conditions of mixed period of high speed and low speed driving. Cleaning and regapping of the sparking plugs is all that is required (see Fig. 37). White to yellowish powdery deposits usually indicate long periods of constant speed service. These deposits have no effect on performance if the sparking plugs are cleaned thoroughly, and the gaps reset at the recommended intervals. More frequent cleaning may be needed if the car is only used for short runs.

WORN CONDITION—This is illustrated in Fig. 38. Any spark plugs found in this condition should be replaced by the correct type given in the Data Section under "Ignition". A complete set should be fitted.

OIL FOULING — Is usually identified by wet sludge deposits traceable to excessive oil entering the combustion chamber through worn rings and pistons, excessive clearances between intake valve guides and stems or worn bearings, etc. (See Fig. 39). Hotter (softer) sparking plugs may alleviate oil fouling temporarily, but in severe cases engine overhaul is called for.

The excessive use of upper cylinder lubricant can also cause fouling.

PETROL FOULING — Is usually identified by dry black fluffy deposits which result from incomplete combustion (see Fig. 40). Too rich an air-fuel mixture or incorrect use of the choke can cause incomplete burning. In addition defective contact breaker points or H.T. cables can reduce voltage supplied to the sparking plug and cause misfiring. If fouling is evident in only a few cylinders, sticking valves may be the cause. Excessive idling, slow speeds or stop-and-go driving can also keep plug temperatures so low that normal combustion deposits are not burned off.

BURNED OR OVERHEATED — Burning or overheating of the sparking plugs are usually identified by a white, burnt or blistered insulator nose and badly eroded electrodes (see Fig. 41). Inefficient engine cooling and incorrect ignition timing can cause general overheating. If only a few sparking plugs are overheated, the cause may be uneven distribution of the coolant. Severe service, such as sustained high speed and heavy loads, can also produce abnormally high temperatures in the combustion chamber, which necessitates use of colder harder running sparking plugs.

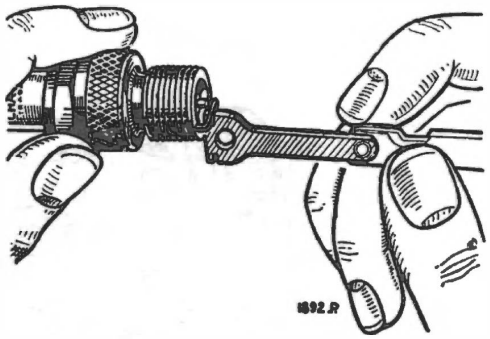

Fig. 42. *Adjusting sparking plug gap*

Cleaning, testing and adjustment

Plugs should be cleaned in a dry abrasive cleaning machine and then tested under pressure.

Excessive cleaning time must be avoided because the abrasive cleaning action can erode the electrode insulator.

Before testing, the sparking surfaces of the electrodes should be lightly filed to remove all traces of burning and to restore flat parallel sparking surfaces. The gaps should then be set to the recommended dimension given in the Data Section under "Ignition".

The gap setting of sparking plugs is very important and adjustment is made by bending the earth electrode with a combined gauge and setting tool, as shown in Fig. 42.

After cleaning, the plug threads should be wire brushed to remove any accumulation of carbon or abrasive material.

A small quantity of graphite grease should be put on each sparking plug thread before the plugs are replaced.

IGNITION TIMING

Engines are very sensitive to ignition timing. Incorrect timing causes rough or harsh running, bad idling, excessive fuel consumption and poor performance.

The ignition timing summary, given on page 53, shows the interelation of ignition timing with the automatic centrifugal and vacuum advance action, and some of the effects that these can give.

Timing adjustments

Two means of adjusting the ignition timing are provided. They are:—

1. A clamp screw mounted horizontally. This is the coarse adjustment and when it is slackened the body of the distributor can be rotated in its mounting plate.
2. The vernier control. This provides an easy means of making small adjustments to the ignition timing to

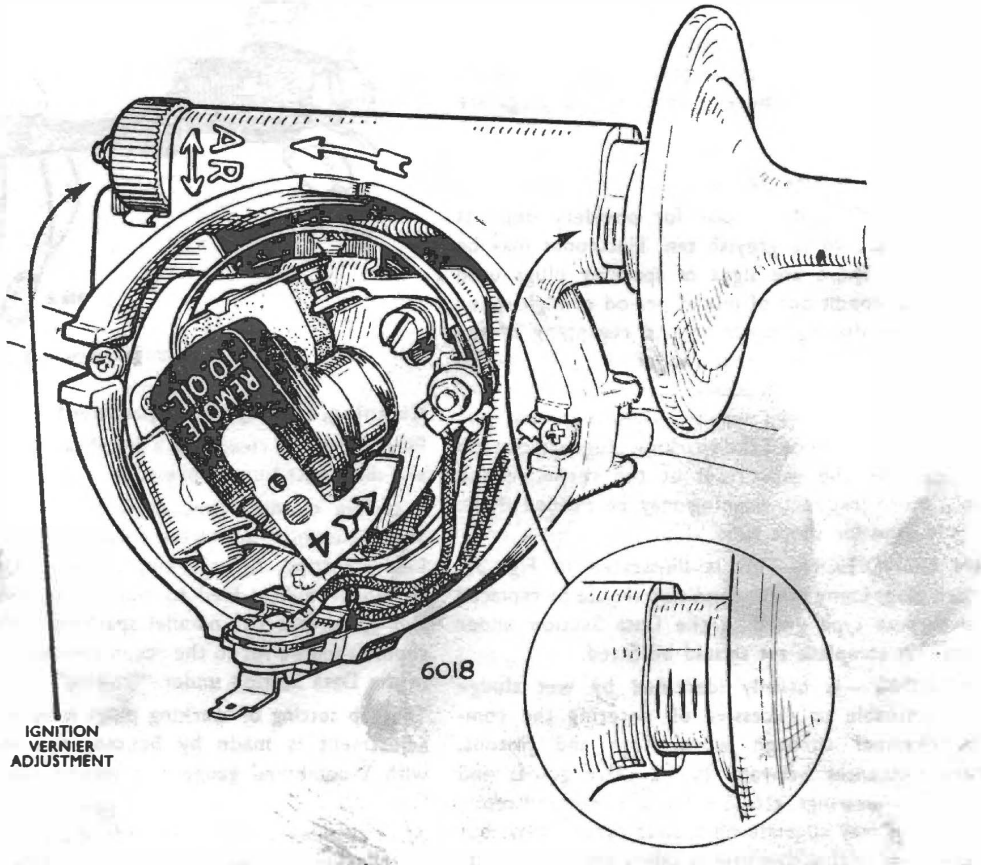

Fig. 43. *Distributor vernier control and vernier markings*

give the best performance from a particular fuel or to eliminate "pinking" when excessive carbon deposits have formed in the engine.

One turn of the vernier knurled adjustment is equivalent to three degrees of crankshaft rotation and one vernier adjustment spacing to four degrees of crankshaft rotation.

The knurled adjustment should be rotated clockwise to retard and anti-clockwise to advance as shown by the letters "R" (retard) and "A" (advance) cast on the distributor body close to the knurled adjustment.

Contact breaker gap — effect on ignition timing

Before checking the ignition timing it is most important to see that the contact breaker point gap is correctly set. If the ignition timing is adjusted while the contact breaker points are incorrectly set, the timing will alter when the points are correctly adjusted.

The contact breaker gap clearance is given in the Data Section under "Ignition System".

As the contact breaker point gap decreases through gradual wear of the moving point heel, the ignition timing becomes retarded. ·004 in. (·10 mm.) reduction of contact point gap retards the ignition by approximately 2° of crankshaft movement. This is equal to half a division on the vernier control, which is enough to reduce engine performance noticeably.

Timing marks—on crankshaft pulleys

See Figs. 44 and 45

Timing marks, spaced at six 5° intervals, are provided on the crankshaft pulleys. On engines with cast iron cylinder heads these take the form of seven or thirteen small vee notches on the rear face of the pulley. On engines with aluminium cylinder heads these spacings are given by seven or thirteen grooves cut across the face of the crankshaft damper periphery.

When the engine is rotated in its running direction TDC (top dead centre) is obtained on numbers 1 and 4 cylinders when the LAST of the vee notches, or cross lines, comes

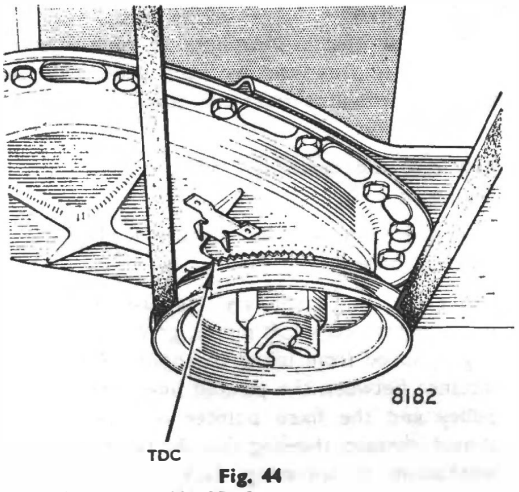

Fig. 44
Timing marks showing 10° BTDC position—engines with cast iron cylinder heads

opposite to the pointer on the timing case.
These timing marks are used to position, or measure the number of crankshaft degrees BTDC (before top dead centre).

Checking ignition timing — static method

Rotate the engine in its running direction until it reaches the required number of degrees BTDC for the ignition timing.

The number of degrees required is given in the Data Section under "Ignition System".
If 8° before TDC is needed this will be 1½ of the timing marks before TDC.

Set the vernier control to the midway position (2 divisions showing on scale). See Fig. 43 top illustration.

Remove the distributor cap and connect a 12 v. bulb between the L.T. terminal of the distributor and a good earth. With the battery connected and the ignition switched on, this bulb will light when the contact breaker points open.

Slacken the distributor clamp screw and rotate the body of the distributor anti-clockwise enough to close the contact breaker points.

Switch on ignition and applying light finger pressure to the rotor in a clockwise direction, return the distributor body clockwise until the bulb just lights.

Tighten the distributor clamp screws. Do not over-tighten because this distorts the clamp.

Check the setting by turning the crankshaft one revolution clockwise until the bulb again lights, observing the relative positions of the fixed timing pointer and pointer or mark on the crankshaft pulley.

The correct mark or pointer on the crankshaft pulley must be opposite the fixed pointer on the timing case.

Switch off the ignition, remove test light, refit distributor cap, and vacuum advance pipe, if removed.

Checking ignition timing — with stroboscopic timing light

A stroboscopic timing light allows the ignition timing to be checked while the engine is running.

When correctly connected, this type of timing light gives a high intensity flash each time No. 1 cylinder fires, and when this light is directed onto the crankshaft pulley, the pulley appears to be "stationary" whilst the engine running. It is therefore possible to "see" what the ignition timing is while the engine is running, and, if necessary, to adjust the ignition timing without stopping the engine.

When using a stroboscopic timing light the ignition timing must be checked at a speed well below that at which the centrifugal advance begins to operate, or at a known speed at which a known centrifugal advance occurs. Tests MUST NOT be made at high idling speeds.

If the engine idling speed can be adjusted to 500 r.p.m. (for this test) the distributor centrifugal advance will not have begun to operate, and the correct ignition timing mark, on the crankshaft pulley, should appear opposite to the fixed pointer on the timing case, when seen in the projected light of the stroboscopic timing light.

When the engine idling speed has to be set at some speed above 500 r.p.m. such as 850 r.p.m., the distributor centrifugal advance may have begun to operate. In such cases the ignition timing will have to be checked after the engine speed has been set to 1000 r.p.m. using a

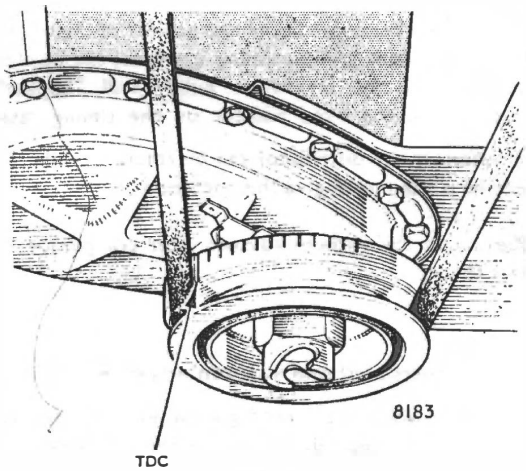

Fig. 45
Timing marks showing 8° BTDC position—engines with aluminium cylinder heads

reliable tachometer to check the engine speed. The ignition timing then becomes static advance plus the centrifugal advance in crankshaft degrees for 1000 r.p.m. crankshaft speed. This is easily arrived at by reference to "Ignition System" in the Data Section.

Example

Static advance angle	7°-9° BTDC (Crankshaft degrees)
Centrifugal advance	At a crankshaft speed of 1000 r.p.m. is 4°.
Therefore advance for engine speed of 1000 r.p.m. is	8°BTDC + 4°BTDC = 12°BTDC or 2½ timing marks BTDC on the crankshaft pulley.

To check the ignition timing by this method:

1. Disconnect the vacuum advance pipe, from the carburettor end, to ensure that the vacuum advance unit does not begin to operate.

2. Clean the fixed pointer on the timing case and the crankshaft pulley markings. Using quick drying white paint, paint the fixed pointer point, and the correct degree position on the crankshaft pulley.
   For engines that can idle at 500 r.p.m. this is the static ignition angle.
   For engines with high idling speed this is the static ignition advance angle plus the centrifugal advance in crankshaft degrees for 1000 r.p.m. crankshaft speed.

3. With the engine running at one or the other of the previously given speeds, project the stroboscopic timing light beam onto the fixed pointer of the timing case. When the ignition timing is correct the painted position on the crankshaft pulley will "appear" opposite to the fixed pointer on the timing case.
   If necessary the distributor can be rotated, while the engine is running to give this condition.

4. Reconnect the vacuum advance after completion of this check.

Checking centrifugal and vacuum advance action

The extent to which the centrifugal and vacuum advance action are checked depends upon the quality of the service required and the symptoms requiring diagnosis.

The methods used are:

Method 1 — Rapid Visual checking

This test is all that is necessary at routine servicing periods when no complaint has been made of the engine performance or fuel consumption. It is carried out in the following manner.

1. Lubricate the centrifugal advance mechanism with engine oil.
2. Disconnect the vacuum advance feed pipe at the carburettor end.
3. Observing the "stationary" painted line previously made on the crankshaft pulley, gradually increase the engine speed from idling to about 3000 r.p.m. The distance between the painted line of the crankshaft pulley and the fixed pointer on the timing case should increase, showing that the centrifugal advance mechanism is operating. Jerky movement of the timing line while increasing or decreasing engine speed indicates sticky action of the centrifugal advance mechanism.
4. Adjust, or hold, the engine speed to about 1500 r.p.m. and still watching the line on the crankshaft pulley with the stroboscopic timing light, connect and disconnect the vacuum advance pipe rubber sleeve confiection to the carburettor. This should cause the vacuum advance to come in and out of operation which will be shown by "movement" of line on the crankshaft pulley. Blockage of the vacuum pipe, vacuum take off hole in the carburettor, jamming of the contact breaker point mounting plate, leaking diaphragm, or diaphragm unit, will prevent correct vacuum advance action.

Method 2 — Measuring advance angle at, or up to 3500 r.p.m.

This method is used when investigating complaints of poor performance, rough running, "pinking", and excessive fuel consumption. While this does not give a complete test of the distributor over its entire operating speed range; because the engine should not be run above 3500 r.p.m. unloaded, the results obtained are satisfactory for almost all purposes. Tests made by this method cover ignition conditions during acceleration and economy driving conditions up to approximately 60 m.p.h. (96 k.p.h.).

The minimum equipment need to carry out this test using the following procedure is,

A stroboscopic timing light.

A vacuum gauge.

A reliable tachometer.

1. Disconnect the vacuum advance pipe connection at the carburettor end.

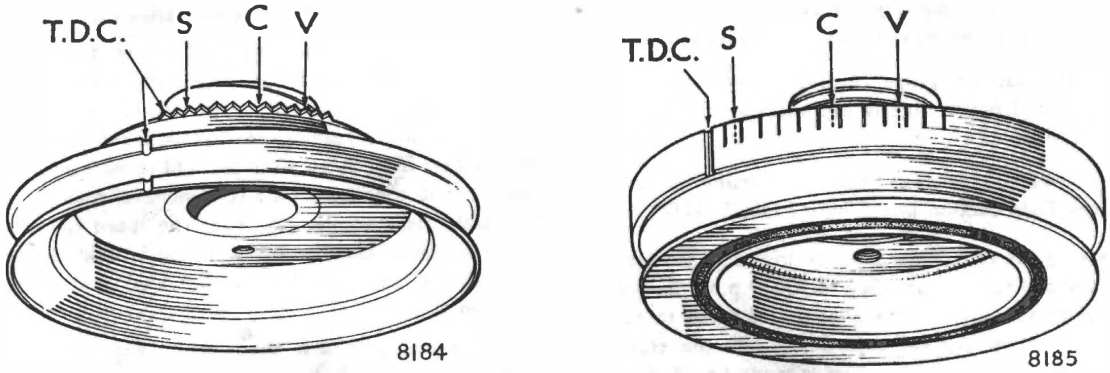

IMPORTANT—*The above only illustrate the text and must not be copied*

TDC = TOP DEAD CENTRE
S = STATIC IGNITION SETTING
C = CENTRIFUGAL ADVANCE
V = VACUUM ADVANCE

Fig. 46. *Crankshaft pulleys marked up for checking centrifugal and vacuum advance*

2. Check, and if necessary adjust the static ignition timing, using a stroboscopic timing light as described on page 50.

3. Refer to the Data Section under "Ignition System" and obtain the centrifugal advance angle for an engine crankshaft speed of 3500 r.p.m. Add this figure and the static ignition figure together and paint this position on the crankshaft pulley.

Example	**Crankshaft degrees**
Static ignition advance angle 7°-9° BTDC	8° BTDC
Crankshaft centrifugal advance at 3500 r.p.m. is 25°	25° BTDC
	33° BTDC

33° BTDC is 6½ crankshaft pulley markings.

4. From this position, mark off a further number of degrees corresponding to the maximum amount of crankshaft vacuum advance. If there are not enough 5° spaced timing marks for this to be done, dividers can be set to this angle using the existing timing marks, and then using the dividers to mark off the vacuum advance angle from the centrifugal advance position.

Example — If the distributor maximum vacuum advance angle is 7½° the crankshaft angle is twice this amount, 15°, and the dividers would be set to a distance of three 5° spacing marks.

The crankshaft pulley is now marked as shown in Fig. 46. It is an advantage to mark the position 'V' with yellow paint.

5. Connect a tachometer to the engine and a vacuum gauge between the distributor vacuum feed pipe and distributor vacuum advance unit connection.

6. Run the engine at 3500 r.p.m. and observe the crankshaft pulley in the light given by the stroboscopic timing light.

   (a) With the vacuum advance pipe disconnected the centrifugal advance angle marking, shown as 'C' in Fig. 46 should appear opposite to the fixed pointer on the timing case.

   (b) With the vacuum advance pipe connected the vacuum advance angle marking, shown as 'V' in Fig. 46, should appear opposite to the fixed pointer on the timing case PROVIDED THAT the vacuum

gauge reading is at, or above, the figure needed to give the maximum vacuum advance.

If the vacuum gauge reading is slightly below the required figure slightly less vacuum advance will be given.

The vacuum advance angles and vacuum are given in the Data Section under IGNITION SYSTEM.

Checking the centrifugal advance and vacuum advance in steps of 500 r.p.m. from 1000 to 3500 r.p.m. requires the use of an autoadvance meter as it is difficult to read off the amount of degrees before TDC on the crankshaft pulley, at each speed. As a test it is used to find a cause for "pinking" or poor performance that still occurs after adjusting the ignition timing correctly.

Incorrect results

If any of the results appear to be incorrect the possible causes are:

1. Observation errors.
2. Instrument errors.
3. Crankshaft pulley incorrectly marked.
4. Static ignition timing not correctly set with the stroboscopic timing light.
5. Centrifugal advance mechanism sticking due to lack of lubrication.
6. Vacuum advance mechanism sticking.
7. Vacuum advance vacuum insufficient due to blockage or leaks in feed line from the carburettor, or blockage of the drilling in the carburettor body.
8. Leaking diaphragm in the vacuum advance unit.
9. Incorrect distributor fitted.
10. Wrong data used.

Method 3 — Removing distributor and testing on a synchroscope

This method is recommended when above the average standards of servicing are needed, as for instance when preparing for competition events. It enables the distributor to be tested up to its highest operating speeds corresponding to the maximum road speed.

As this test cannot show faults caused by an irregular drive to the distributor, a check should be made with the distributor in position on the engine to ensure that the firing angles are not increased by the distributor drive. This can only be done with test equipment incorporating an oscilloscope.

Ignition timing — Road performance test

After setting the static ignition timing and checking centrifugal and vacuum advance action as previously described, a road performance test can be made by taking stop watch readings of the time taken to accelerate in top gear from 30 to 50 m.p.h. (48 to 80 k.p.h.) under full throttle conditions on a straight level road. In order to obtain clean acceleration over the speed range to be checked the accelerator pedal should be fully depressed at 22-25 m.p.h. and the stop watch started at 30 m.p.h. and stopped at 50 m.p.h.

Small adjustments are then made with the vernier control on the distributor until the lowest stop watch reading is obtained. Several test runs have to be made ON THE SAME ROAD in the same direction.

The accelerator should not be fully depressed at 30 m.p.h. as this can produce inaccurate results due to possible temporary richness caused by the fuel injected by the accelerator pump or other enrichment device.

This test requires considerable skill and should only be undertaken by those who have the necessary road testing experience. GREAT CARE IS NEEDED TO PREVENT OVER ADVANCING THE IGNITION TIMING.

It is emphasized that the distributor centrifugal and vacuum advance mechanism, must be working correctly and if these are in any way suspect, after checking the distributor in position, the distributor should be removed and checked on a reliable test rig or distributor analyser. The use of a Crypton test equipment is recommended. Distributor centrifugal and vacuum advance figures are given in the Data Section under "Ignition".

Weather conditions

Atmospheric temperature, pressure (barometer reading) and humidity (dampness) all affect engine performance and must be taken into account. For example, if the ignition setting was made — by the road performance method — when the barometer was very low and the air very damp, the setting made might prove to be too advanced under the operating conditions shown by a high barometer reading and warm dry air.

Fuel

Whenever possible, the ignition timing, if finalised by the road performance method, should be set to the fuel used by the owner provided it has a suitable octane rating.

Instances are met where owners have bought or use fuels of too low an octane rating. This is shown by audible pinking with the ignition correctly adjusted by the static method. If the fuel is suspected the car should be tested with a suitable fuel in a test tank connected to the fuel pump inlet connection.

IGNITION TIMING SUMMARY

Static Ignition Timing	Centrifugal Advance Action	Vacuum Advance Action	Result
Correct	Correct	Correct	Whole ignition range operating correctly giving maximum power, acceleration and low fuel consumption with smooth running.
Too advanced	†	†	†Also becomes incorrect and causes rough running sometimes "pinking" and inferior performance.
Too retarded	*	*	*Also incorrect. Causes overheating, bad performance and high fuel consumption.
Correct	Sticking or Inoperative mechanism	Correct	Causes poor performance and sometimes "pinking" or back-firing.
Correct	Correct	Sticking or not operating	Can lower fuel consumption up to 4 m.p.g. under light throttle driving conditions. The effect on performance is hardly noticeable. It does not affect accelaration

Testing for air leakage in vacuum advance system

This can be done as follows.

1. Disconnect the vacuum advance vacuum pipe at the carburettor end, and using suitable rubber tubing connect a Tee piece between the end of the vacuum pipe and the carburettor connection.
2. Connect a vacuum gauge to the remaining outlet from the Tee piece.
3. Start the engine and increase its speed until the vacuum gauge reads 15 to 20 ins. of vacuum.
4. Compress the rubber tube between the Tee piece and carburettor. Then stop the engine. If the diaphragm, diaphragm unit, feed pipe, and feed pipe connection are free from air leaks the vacuum gauge reading will remain stationary until pressure on the rubber pipe is released.

DISTRIBUTOR

Identification

Distributors are normally identified by their Lucas Dispatch Number which will be found stamped on the distributor body just below the vernier control.

The dispatch number of the correct distributors for the various engines are given in the Data Section under "Ignition System".

If necessary the amount of centrifugal and vacuum advance can be found from numbers stamped on these mechanisms as explained in the following paragraphs. These will be found useful when a distributor performance does not match to the specification for its dispatch number.

Amount of centrifugal advance

On DM2 type distributors the amount of centrifugal advance in distributor degrees, is stamped on the circular plate on which the centrifugal advance weights are mounted. To see this number it is necessary to remove the contact breaker mounting plate and the advance weights.

On 25D type distributors this number is stamped on the curved arm extension of the cam spindle and can be seen after removing the contact breaker mounting plate.

Amount of vacuum advance

Vacuum advance units are stamped externally. The following is given as an example.

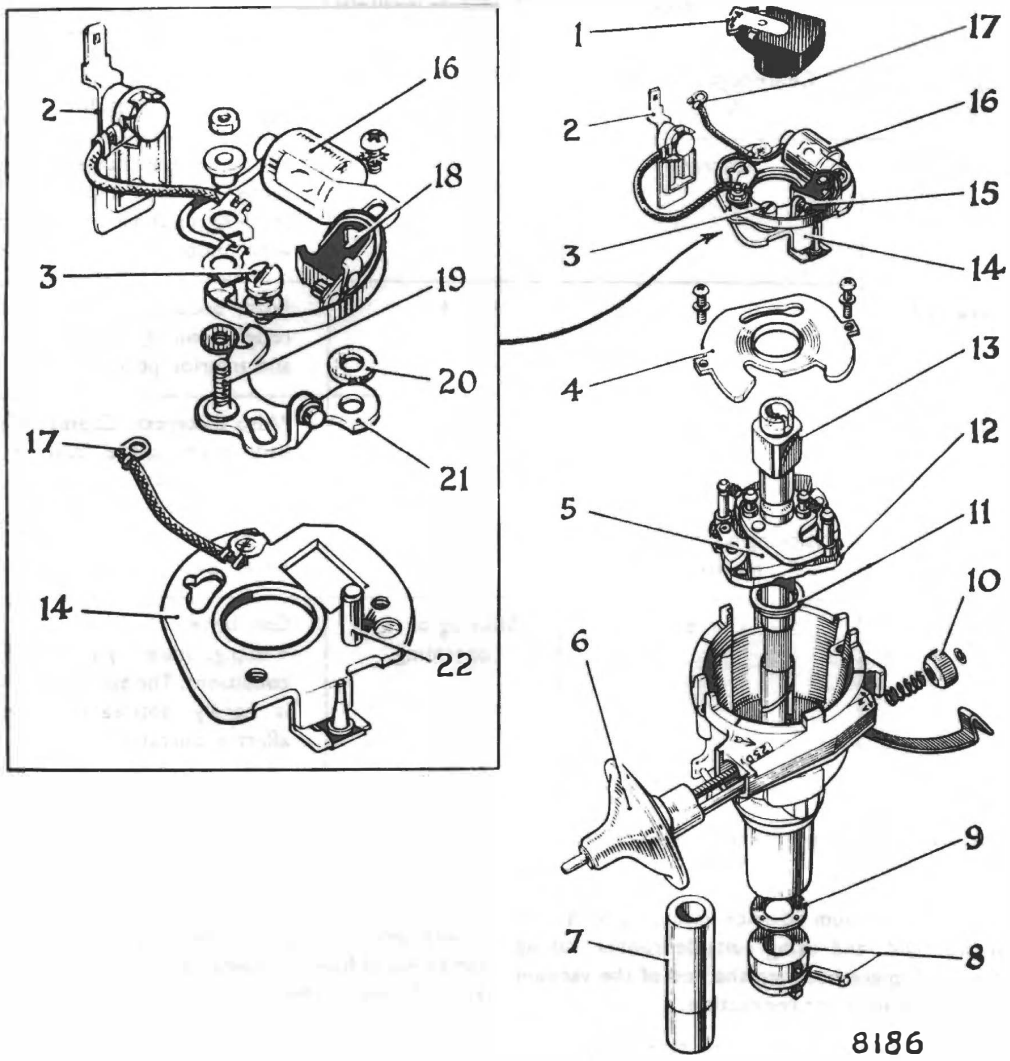

1. ROTOR ARM
2. L.T. TERMINAL
3. FIXED CONTACT PLATE SECURING SCREW
4. CONTACT BREAKER BASE PLATE
5. CENTRIFUGAL ADVANCE CONTROL WEIGHTS
6. VACUUM ADVANCE CONTROL UNIT
7. BEARING BUSH
8. DOG AND PIN
9. THRUST WASHER
10. VERNIER ADJUSTMENT NUT
11. DISTANCE COLLAR
12. ACTION PLATE
13. CAM
14. CONTACT BREAKER MOVING PLATE
15. CONTACTS
16. CONDENSER
17. C.B. EARTH CONNECTOR
18. CONTACT BREAKER LEVER
19. TERMINAL PILLAR
20. FIBRE WASHER
21. FIXED CONTACT PLATE
22. CONTACT BREAKER PIVOT POST

Fig. 47. *Exploded view of Lucas 25D type distributor*

Example

Marking 5 — 11 — 7.

5 = Vacuum in inches of mercury at which vacuum advance commences.

11 = Vacuum in inches of mercury at which maximum vacuum advance is reached.

7 = Maximum amount of VACUUM ADVANCE in DISTRIBUTOR DEGREES reached after 11 ins. of vacuum is applied to the diaphragm unit.

Overhaul

Dismantling—See Fig. 47

When dismantling, carefully note the positions in which the various components are fitted, in order to ensure their correct replacement on reassembly. The tongue of the driving dog is offset: note the relation between it and the rotor electrode and maintain this relation when reassembling the distributor.

The amount of dismantling necessary will obviously depend on the repair required.

Spring back the securing clips and remove the moulded cover. Lift the rotor arm off the spindle. Disconnect the vacuum unit link to the contact breaker moving plate and remove the two screws at the edge of the contact breaker baseplate. Disconnect the L.T. cable. The contact breaker assembly, complete with external terminal, can now be lifted off. Remove the circlip on the end of the micrometer timing screw, and turn the micrometer nut until the screw and the vacuum unit assembly are freed. Take care not to lose the ratchet and coil type spring located under the micrometer nut. The shaft assembly, complete with centrifugal timing control and cam foot can now be removed from the distributor body after removing the dog securing pin.

Contact breaker

To dismantle the assembly further, remove the nut, insulating piece and connections from the pillar on which the contact breaker spring is anchored. Lift off the contact breaker lever and the insulating washers beneath it. Remove the screw securing the fixed contact plate, together with the spring and plain steel washers, and take off the plate. Withdraw the single screw securing the capacitor. Dismantle the contact breaker base assembly by turning the base plate clockwise and pulling to release it from the contact breaker moving plate.

Shaft and Action Plate

When dismantling the centrifugal timing control mechanism it is important that it is carried out in the order described otherwise damage to the springs may result. Carefully lift off the springs, withdraw the screw inside the cam and take off the cam and cam foot. The weights can now be lifted off. Note that a distance collar is fitted on the shaft beneath the action plate.

Bearing replacement

The bearing bush is of sintered copper-iron and is stepped, having the larger diameter extending $\frac{3}{4}$ in. (19 mm.) in length from the bottom of the bush. Prepare the new bush for fitting by allowing it to stand completely immersed in clean medium viscosity (SAE 30-40) engine oil for at least 24 hours. In cases of extreme urgency, this period of soaking may be lessened by heating the oil to 100°C for 2 hours, then allowing the oil to cool before removing the bush. The following procedure must be closely followed when fitting a replacement bearing bush:

(1) Using a shouldered mandrel of appropriate diameter press out the worn bush from the body end.

(2) Insert the replacement bush from the drive end, with the smaller bush diameter as the leading part. The bush will be a push fit until the larger diameter comes into contact with the shank. With the mandrel in position, the bush is then to be pushed fully in with steady pressure, using a press, vice, or similar method. When in place, the bush must be a tight fit, flush with the shank at the drive end with a slight protrusion at the top end.

(3) Drill the shaft drain hole, carefully removing any fragments of metal.

(4) Insert the shaft and action plate assembly, with clean engine oil applied to the shaft. Make sure that there is no fraze around the hole in the shaft through which the driving dog securing pin is inserted. If the shaft is tight in the bearing when fitted, tap lightly at the drive end and withdraw the shaft. Again insert the shaft, and repeat the operation as long as any tightness exists. It is important that the shaft is free to rotate without binding.

(5) Run the shaft and body in a test rig or lathe for about 15 minutes, re-lubricate the shaft with clean engine oil and reassemble the distributor.

Under no circumstances is the bush to be over-bored by reaming or any other means, since this will impair the porosity and thereby the effective lubricating quality of the bush.

Reassembly—See Fig. 47.

The following instructions assume that complete dismantling has been undertaken.

(1) Place the distance collar over the shaft, smear the shaft with clean engine oil, and fit it into its bearing.

(2) Refit the vacuum unit onto its housing and refit the spring, milled adjusting nut and securing circlip.

(3) Reassemble the centrifugal timing control weights, cam and cam foot to the shaft. Fit the cam securing screw, then engage the springs with the cam foot pillars.
(Ensure that the springs are not stretched or damaged.)

(4) Before reassembling the contact breaker base assembly, lightly smear the base plate with clean engine oil or light grease. Fit the contact breaker moving plate to the contact breaker base plate and secure using a reversal of the dismantling procedure. Refit the contact breaker base into the distributor body. Engage the link from the vacuum unit. Insert the two base plate securing screws, one of which also secures one end of the contact breaker earthing cable.

(5) Refit the capacitor. Place the fixed contact plate in position and secure lightly with the securing screw. One plain and one spring washer must be fitted under the securing screw.

(6) Place the insulating washers, etc., on the contact breaker pivot post end on the pillar on which the end of the contact breaker spring locates. Refit the contact breaker lever and spring.

(7) Slide the terminal block into its slot.

(8) Thread the low tension connector and capacitor eyelets on to the insulating piece, and place these on the pillar which secures the end of the contact breaker spring. Refit the washer and securing nut.

(9) Set the contact gap to ·015 in. (·38 mm.) and tighten the fixed contact plate securing screw.

(10) Refit the rotor arm, locating the moulded projection in the rotor arm with the keyway in the shaft, and pushing fully home. Refit the moulded cover.

Replacement contacts

If the contacts are so badly worn that replacement is necessary, they must be renewed as a pair and not individually. New contacts are covered with a protective coating which must be removed before they are fitted. The contact gap must be set to ·015 in. (·38 mm.). After the first 500 miles running with new contacts fitted, they should be cleaned if necessary and the gap reset to ·015 in. (·38 mm.). This procedure allows for the initial "bedding-in" of the heel.

To remove and refit

Remove high tension leads from plug terminals, noting their positions. Disconnect high tension lead at coil. Disconnect low tension lead at distributor body. Disconnect vacuum pipe. Remove the setbolt securing the distributor clamping plate to the distributor housing and withdraw distributor and housing together.

Refitting is a reversal of the above.

Check ignition timing.

To fit replacement distributor

Before fitting a replacement distributor, turn the engine so that the timing mark on the crankshaft pulley comes opposite to the pointer on the timing case when the distributor driving slots in oil pump gear are in the position illustrated in Fig. 14, Section B.

Install replacement distributor.

The distributor rotor is now adjacent to No. 1 H.T. connection in the distributor cap. No. 1 H.T. lead should be fitted to this connection and No. 1 cylinder spark plug and the other H.T. leads to give the correct firing order of 1, 3, 4, 2. The distributor rotor rotates in an anti-clockwise direction as seen when the distributor cap is removed.

Set the ignition timing by one of the methods previously described.

FUEL SYSTEM

SECTION C

CONTENTS

Page

FUEL PUMP

—Description 2
—Filter 3
—Fuel shortage at carburettor 3
—Testing fuel pump when fitted to engine 3
—Output quantity 3
—Output pressure 3
—To remove fuel pump from engine 4
—To dismantle fuel pump 4
—Inspection of parts 4
—To reassemble fuel pump 4
—To test fuel pump after assembly 6
—To refit pump to engine 6
—Exploded view 5

CARBURETTORS

—Zenith 34 IV 7
—Solex B.32 P.A.I.A.S. 23
—Stromberg 150 C D — twin carburettors 45

AIR CLEANERS

—Used with Zenith 34 IV carburettor 63
—Used with Solex B.32 P.A.I.A.S. carburettor 63
—Used with twin Stromberg 150 C D carburettors 64

AC FUEL PUMP

DESCRIPTION (See Fig. 1)

The A.C. mechanically operated pump is mounted on the right-hand side of the engine and operated by an eccentric on the camshaft. A gauze filter and glass cover bowl are incorporated with the pump.

As the engine camshaft revolves an eccentric (7) actuates the fuel pump rocker arm (6) pivoted at (8) which pulls the pullrod (11) together with the diaphragm (13) downwards against spring pressure (12) thus creating a depression in the pump chamber (15). Fuel is then drawn from the tank and enters the glass bowl from the pump intake (3). After passing through the filter gauze (17) and the inlet valve (1) it enters the pump chamber (15).

On the return stroke, pressure of the spring (12) pushes the diaphragm (13) upwards forcing fuel from the chamber (15) through the outlet valve (16) and outlet (14) to the carburettor. When the carburettor bowl is full the float will shut the needle valve, thus preventing any flow of fuel from the pump chamber (15). This will hold the diaphragm (13) downwards against the spring (12) pressure and it will remain in this position until the carburettor requires further fuel and the needle valve opens.

The rocker arm (6) operates the connecting link (9) by making contact at (5) and this construction allows idling movement of the rocker arm when there is no movement of the fuel pump diaphragm.

The spring (4) keeps the rocker arm (6) in constant contact with the eccentric (7) to eliminate noise.

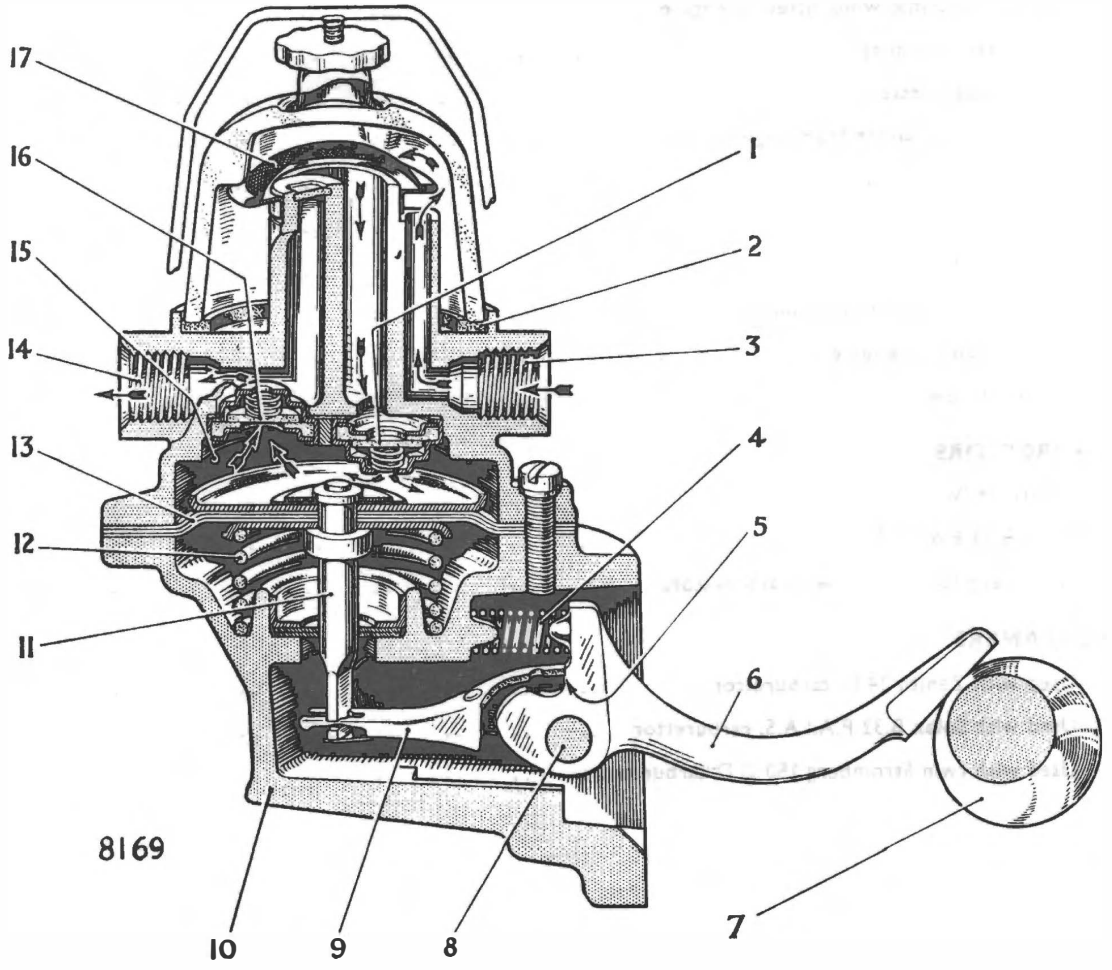

Fig. 1. *Sectional view of fuel pump*

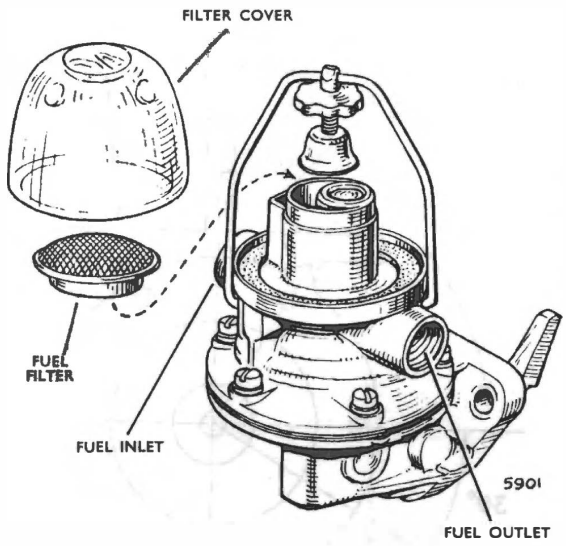

Fig. 2. *Fuel pump filter*

FILTER (See Figs. 1 and 2)

To gain access to the filter gauze for cleaning, first remove the glass bowl, after slackening the securing screw and swinging the fixing clamp to one side.

The washer (2) and filter (17) can then be removed from the main casting. Wash the filter in clean fuel, and replace it before fitting the washer.

When refitting see that the washer is in good condition and properly seated. Do not overtighten the securing screw or the excessive pressure will cause rapid deterioration of the joint.

FUEL SHORTAGE AT CARBURETTOR

If the pump fails to deliver fuel to the carburettor the following points should be checked:

1. That fuel is available in the tank and that the unions in the pipe connecting the tank to the pump are tight.
2. That the pump filter is clean and that the washer below the filter cover is in good condition.
3. The action of the pump, proved by revolving the engine with the starter with the delivery pipe (pump to carburettor) disconnected.

TESTING FUEL PUMP WHEN FITTED TO ENGINE

The fact that a fuel pump gives a spurt of fuel, once every two engine revolutions, shows that it is delivering fuel. This should not be taken as an indication that the pump is delivering fuel at its proper rate of discharge.

Output quantity

The fuel pump output can be checked by disconnecting the fuel feed pipe, from the carburettor end, and fitting a tee piece between the fuel pipe end and carburettor.

A flexible pipe is connected to the tee piece and used to feed fuel into a measuring container.

The engine should be run at 1,500 to 2,000 r.p.m. The fuel pump output should be:

1 pt. (·56 litres) in 1 minute.

If air bubbles are seen in the fuel discharged into the measuring container, they indicate that air is being drawn in with the fuel. This can be due to a low level of fuel in the fuel tank, loose fuel pipe unions, cracked fuel pipe, leaks at the fuel pump bowl, joint valves, valve gasket, or porous diaphragm. Supplying the fuel pump from a separate source will show if the pump is drawing air, or if it comes from the supply before the pump.

Fuel pump output can be reduced by a partially blocked fuel pipe or by obstruction where the fuel feeds to the fuel pipe connection inside the fuel tank.

Output pressure

Excessive fuel pump pressure can be a cause of heavy fuel consumption. This can be checked and if necessary rectified as follows:

1. Disconnect the pipe to the carburettor at the pump.
2. A mercury manometer or a suitable reliable pressure gauge calibrated up to 6 lb. per sq. in. (0·422 kg. per sq. cm.) should then be connected to and as near as possible, on the same level with the outlet on the pump.
3. Rotate the engine on the starter. A reading similar to that given in the Data Section under "Fuel System" should be recorded on the gauge.

To remedy excessive output pressure additional packings should be fitted between the fuel pump flange and cylinder block pump mounting face.

Excessive output pressure can be caused by stiffening up of the pump diaphragm, and the diaphragm condition should be checked on any pump that has been in service for a long time.

Care should be taken to avoid the use of an excessive number of packings as this can cause fuel starvation under full throttle conditions.

The pump output, and output pressure, should always be rechecked after adding or removing packings.

TO REMOVE FUEL PUMP FROM ENGINE

Disconnect the fuel pipes by undoing their unions on the fuel pump body. When necessary blank end of fuel pipe to prevent loss of fuel. Remove the two nuts holding the pump to the engine crankcase and lift away pump carefully noting the number of joints used between the pump mounting face and the crankcase face.

TO DISMANTLE FUEL PUMP (See Fig. 4)

Before commencing to dismantle the pump thoroughly clean the exterior and make a mark across the two flanges of the pump housing, as a guide when reassembling. Remove the six securing setscrews (19) and separate the two halves of the main casting.

Turn the diaphragm and pull-rod assembly (7) through an angle of 90°, when it may be disconnected from its securing slot in the connecting link (13) and withdrawn. Remove the diaphragm spring (10).

The diaphragm and pull rod are a permanent assembly and no attempt should be made to separate the parts.

Secure rocker arm (15) in vice and tap face of body mounting flange with a soft mallet until the two retainers (17) are dislodged.

The rocker arm (15) together with the connecting link (13), spring (16) and washers (14) may now be removed. The valves (6) are a press fit into the valve body (4). They are also staked in position and should only be removed when they have to be renewed, as they have to be levered out with a screwdriver, which destroys them.

INSPECTION OF PARTS

Thoroughly clean all parts in paraffin. The valve body (4) and valves (6) should be further washed in clean paraffin.

The diaphragm and pull rod assembly should be renewed if there is any sign of hardening or cracking.

All badly worn parts must be renewed and very little wear may be tolerated on the rocker arm pin, holes and engagement slot in link, holes in rocker arm, contact face of rocker arm or pull rod.

The valve assemblies cannot be dismantled and should be renewed where necessary.

Check the diaphragm spring, although this seldom requires replacement. Where necessary ensure that the replacement spring has the same identification colour and consequently the same strength as the original.

All gaskets and joints should be renewed as a matter of routine, including the oil seal washers located round the diaphragm pull-rod.

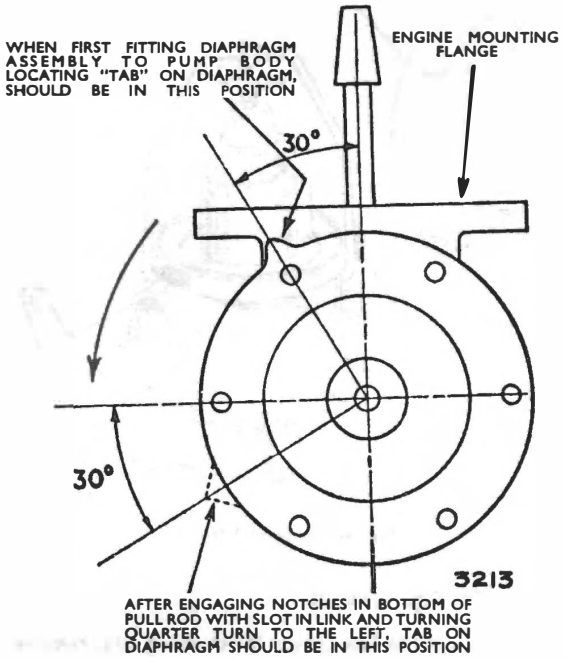

Fig. 3. *Fitting diaphragm assembly*

TO REASSEMBLE FUEL PUMP

If new valves (6) have to be fitted new valve gaskets (5) should be put in the bottom of the valve seat bores. The valves must be assembled in the valve body (4) as illustrated in Fig. 1. If fitted in any other way the pump will not operate.

Press the new valves (6) into the valve body (4) with a piece of steel tubing having an outside diameter of $\frac{3}{4}$ in. (19 mm.) and an internal diameter of $\frac{9}{16}$ in. (14·3 mm.). Then stake the valve body (4) in six places around each valve with a suitable punch.

Assemble the link (13), rocker arm (15) and packing washers (14) onto the pivot pin (18). Place this assembly into the main body (11) and then add the rocker arm return spring (16) making sure that it seats correctly. Tap new retainers (17) into the main body (11) until they press hard against the rocker arm pin and then stake over the open ends of the two grooves to secure the retainers. Place the diaphragm spring in position in the pump body. Place the diaphragm assembly over the spring (the pump rod being downwards) and centre the upper end of the spring in the oil seal washer (9).

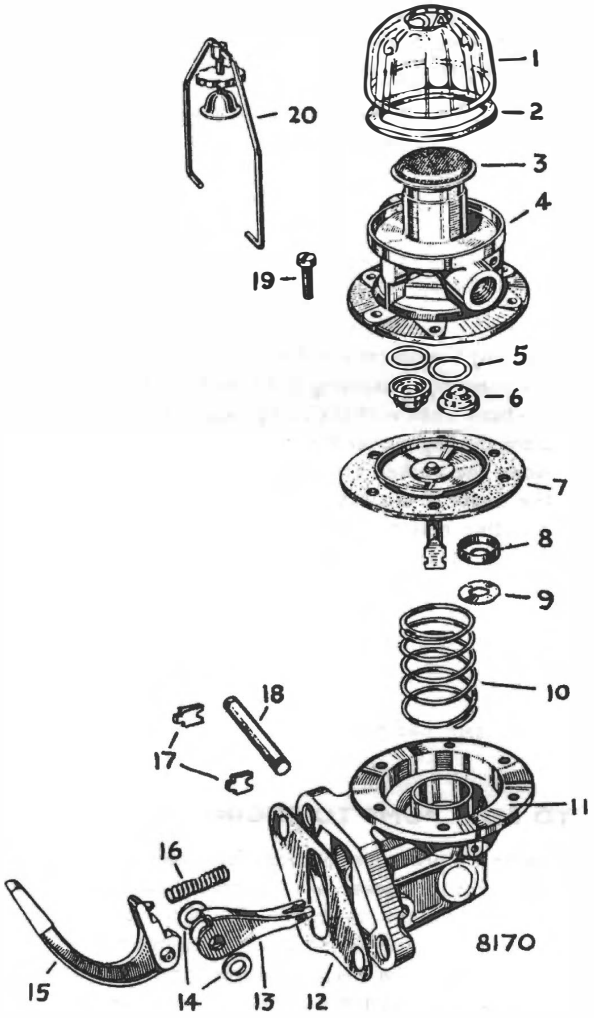

1. FILTER COVER
2. FILTER COVER JOINT
3. FILTER GAUZE
4. VALVE BODY
5. GASKETS — USED BELOW VALVES
6. INLET AND OUTLET VALVES
7. DIAPHRAGM ASSEMBLY
8. OIL SEAL RETAINER
9. OIL SEAL WASHER
10. DIAPHRAGM RETURN SPRING
11. PUMP MAIN BODY
12. JOINT — PUMP TO CYLINDER BLOCK
13. LINK — OPERATING DIAPHRAGM
14. WASHERS
15. ROCKER ARM — OPERATING LINK 13
16. ROCKER ARM RETURN SPRING
17. ROCKER ARM PIN RETAINERS
18. ROCKER ARM PIVOT PIN
19. SCREW — VALVE BODY TO PUMP BODY
20. FILTER COVER RETAINING CLIP

Fig. 4. *Fuel pump—exploded view*

Press downwards on the diaphragm, at the same time turning the assembly to the left in such a manner that the slots on the pull rod will engage the fork in the link. Then turn the assembly a complete quarter turn to the left, which will place the pull rod in the proper working position in the link, and at the same time permit the alignment of the holes in the diaphragm with those in the pump body flanges. When first inserting the diaphragm assembly into the pump body, the locating "tab" on the outside of the diaphragm should be at the position shown in Fig. 3. After turning the diaphragm assembly a quarter turn to the left the "tab" should be in the position indicated by the dotted outline.

The sub-assemblies of the pump are now ready for fitting together, and this is carried out as follows:

Push the rocker arm towards the pump until the diaphragm is level with the body flanges.

Place the upper half of the pump into the proper position, as shown by the mark made on the flanges before dismantling.

Install the cover screws and tighten until the heads of the screws just engage the washers.

Before finally tightening screws, push rocker arm towards pump using about a 4 in. (10 cm.) length of tube slipped

over the end of the rocker arm so as to hold the diaphragm at the bottom of its stroke. Hold in this position and tighten screws alternately. After assembly the edges of the diaphragm should be about flush with the two clamping flanges.

Any appreciable protrusion of the diaphragm indicates incorrect fitting, in which case special care should be paid to maintaining inward pressure on the rocker arm while the diaphragm screws are finally tightened alternately and securely.

Refit filter gauze and filter bowl seating gasket in position. Refit filter bowl as previously described.

TO TEST FUEL PUMP AFTER ASSEMBLY

The best method is by using an AC Delco bench test stand, on which the suction side of the pump is piped from bench height to a tin of paraffin (kerosene) at floor level and the outlet side of the pump connected to a stop tap and pressure gauge.

First, flush the pump through to wet the valves and seats, and then completely empty it again by continuing to operate the rocker arm by hand with the suction pipe clear of the paraffin (kerosene). Again operate pump. Not more than 16 strokes should be necessary to secure delivery of paraffin from the pump outlet.

With the same apparatus a second test can be made by working the pump with the tap on the delivery side closed, pressure then being recorded on the gauge. After ceasing to work the pump it should take several seconds for this pressure to return to zero, thus denoting that the valves are seating properly. Also, while there is pressure, the outer edge of the diaphragm — visible between the two clamping flanges — should be carefully examined for leakage and the retaining screws tightened if necessary. When working the pump by hand a somewhat longer stroke is obtained and the pressure developed may be higher than when fitted to the engine.

The fuel pump output pressure cannot be checked with the pump mounted on the AC test stand, because, the test stand mounting position may not compress the spring (10), Fig. 4, to the same amount as that given when the pump is in position on the engine cylinder block. When the above apparatus is not available the pump should be tested, using a pan of clean paraffin as follows:

Flush the pump by immersing it in the paraffin and working the rocker arm half a dozen times, then empty the pump by continuing to operate it while held above the bath. Then with the pump clear of the paraffin bath, place the finger over the inlet union (marked "in") and work the rocker arm several times. Upon removing the finger a distinct suction noise should be heard, denoting that the pump has developed a reasonable degree of suction. Afterwards the finger should be placed over the outlet union and after pressing the rocker arm inwards the air drawn into the pump chamber should be held under compression for two or three seconds; this should be done with the pump immersed in paraffin and the clamping flanges of the diaphragm watched for any signs of air leakage.

TO REFIT PUMP TO ENGINE

Reverse the procedure outlined for removal from engine. Ensure that the rocker arm is correctly positioned. After refitting the pump, the engine should be run for a short time and pipe unions and pump examined for any signs of fuel leakage. The fuel pump output pressure should also be checked as described under "Testing the fuel pump when fitted to the engine".

CARBURETTOR

TYPE — ZENITH IV

Page

DESCRIPTION 8

OPERATION

—Chart — summary of operation 9

—Float chamber 8

—Starting from cold 8

—Slow running.. 9

—Part throttle driving 11

—Economy device 11

—Wide throttle driving 11

—Acceleration 11

STARTING PROCEDURE

—Cold starting 13

—Hot starting 13

—Extreme hot conditions — starting 13

DIAGNOSIS OF FAULTS

—Condition of ignition, fuel system, compressions, and exhaust system 13

—Excessive fuel consumption 14

—Insufficient top speed 15

—Faulty slow running 15

—Flat spot or hesitation at small throttle openings 16

—Poor acceleration 16

—Difficult starting from cold.. 17

—Difficult starting when hot 17

ADJUSTMENTS

—Slow running 17

—Accelerator pump stroke 18

—Throttle fast idling position — for cold starting 18

—Fuel level 19

—Choke control 19

—Choke valve return spring tension 19

—Full throttle position and accelerator pedal position 19

CLEANING IN POSITION 19

REMOVAL AND REFITTING 22

ZENITH IV CARBURETTOR

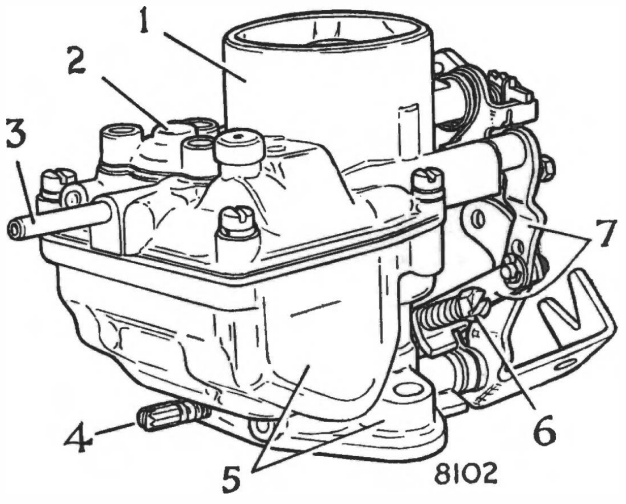

Fig. 1. *Zenith IV carburettor—External view*

Key to Fig. 1

1. CARBURETTOR TOP BODY
2. ECONOMY VALVE COVER
3. FUEL INLET CONNECTION PIPE
4. SLOW RUNNING MIXTURE VOLUME CONTROL SCREW
5. CARBURETTOR MAIN BODY AND FLOAT CHAMBER
6. SLOW RUNNING SPEED ADJUSTMENT SCREW
7. ACCELERATOR PUMP OPERATING LEVER AND LINK (IN SHORT STROKE POSITION)

DESCRIPTION — See Fig. 1

The Zenith 34 IV is a downdraught type of carburettor developed from the Zenith V range of carburettors. 34 denotes the throttle bore diameter in millimetres, and IV the type reference letters.

The three main parts of this carburettor are:

1. A float chamber, main body, and choke tube (venturi) made as a die casting (5). There is no separate choke tube.

2. A top cover body (1) held by four cheese head screws to the main body.

3. An emulsion block having an extension that forms an inner venturi discharge within the large venturi (choke tube). All fuel jets and the accelerator pump are in the emulsion block, which can be removed from the top cover, with a screwdriver and $\frac{7}{16}$ A.F. spanner.

Twin floats are used in the large float chamber set close to the throttle bore to give a high flooding angle. This controls the fuel level so that performance is not affected by steep inclines, fast acceleration, hard braking or surging on bends.

The fuel inlet (3) on the top body above the float chamber is a parallel tube, to allow the direct connection of a plastic fuel pipe.

An economy device (2), mounted on the top body, operates by inlet manifold vacuum and weakens the mixture under part throttle conditions to give maximum fuel economy.

The accelerator pump lever (7) can be adjusted to have either a long or short stroke, to meet varying climatic conditions.

OPERATION

A summary of the carburettor parts in operation for different engine requirements is given in chart form on page 9.

Float Chamber — See Fig. 2

Fuel enters the float chamber through the connection (40) and the needle valve seating (39). The fuel flow is controlled by the needle (38) and twin floats (37). As the fuel level rises the floats lift, and their connecting arm lifts the needle (38) onto its seat (39) when the correct level is reached. While the engine is running, fuel is used, and the floats lower to admit fuel through the needle valve.

Fuel in the float chamber surrounds the emulsion block, and passes through all submerged jets and channels to rise to the same level as that existing in the float chamber.

Starting from cold — See Fig. 2

When the choke control is pulled fully out into the cold starting position, the lever (7) allows a light spring (1) to AUTOMATICALLY rotate the choke valve spindle and close the choke valve (10). Movement of the lever (7) also lifts the connecting rod (2) which opens the throttle to the correct fast idling position for cold starting.

After switching on the ignition and operating the starter, the engine should start and continue to run, because the choke valve opens a small amount AUTOMATICALLY, to allow the entry of enough air to prevent over richening after the engine starts.

ZENITH IV CARBURETTOR — PARTS IN OPERATION

ENGINE REQUIREMENTS	Float Chamber	Slow-running jet	Progression holes	Main Jet	Compen-sating Jet	Economy device		Accelerator pump
						Full air bleeding	Restricted air bleeding	
Cold starting (with choke valve closed)	●	●	●	●	●		●	
Slow running	●	●						
Fast idling	●	●	●					
Light throttle driving	●			●	●	●		
Wider and wide throttle driving	●			●	●		●	
Sudden acceleration	●			●	●		●	●
Deceleration on closed throttle	●	●						

● In operation.

Over the throttle operating range the main jet gives a progressively greater fuel discharge. This is corrected by the actions of the compensating jet as controlled by the economy device.

The economy device is operated by inlet manifold vacuum which depends upon throttle position. Its action determines whether the carburettor gives an economy mixture or a normal mixture.

While the engine is turning, before its start, the high depression on the jets, caused by the closed choke valve (10), increases their fuel discharge rates and provides the amount of fuel needed for cold starting.

The slight AUTOMATIC opening of the choke valve, directly the engine starts, is caused by atmospheric pressure acting on the larger area of the upper side of the offset pivoted choke valve. This is possible because the pressure below the choke valve, when closed, is reduced below atmospheric directly the engine starts.

When the choke control is returned to its normal position, the lever (7) overrides any automatic movement of the choke valve spindle, and also reduces the fast idle speed to the normal idling speed.

Slow running — See Fig. 2

Under slow running conditions the throttle slow running speed adjustment screw is against its stop and the throttle almost fully closed. In this position the throttle allows enough air to pass to mix with the fuel metered by the slow running jet (24), and provide a suitable slow running mixture.

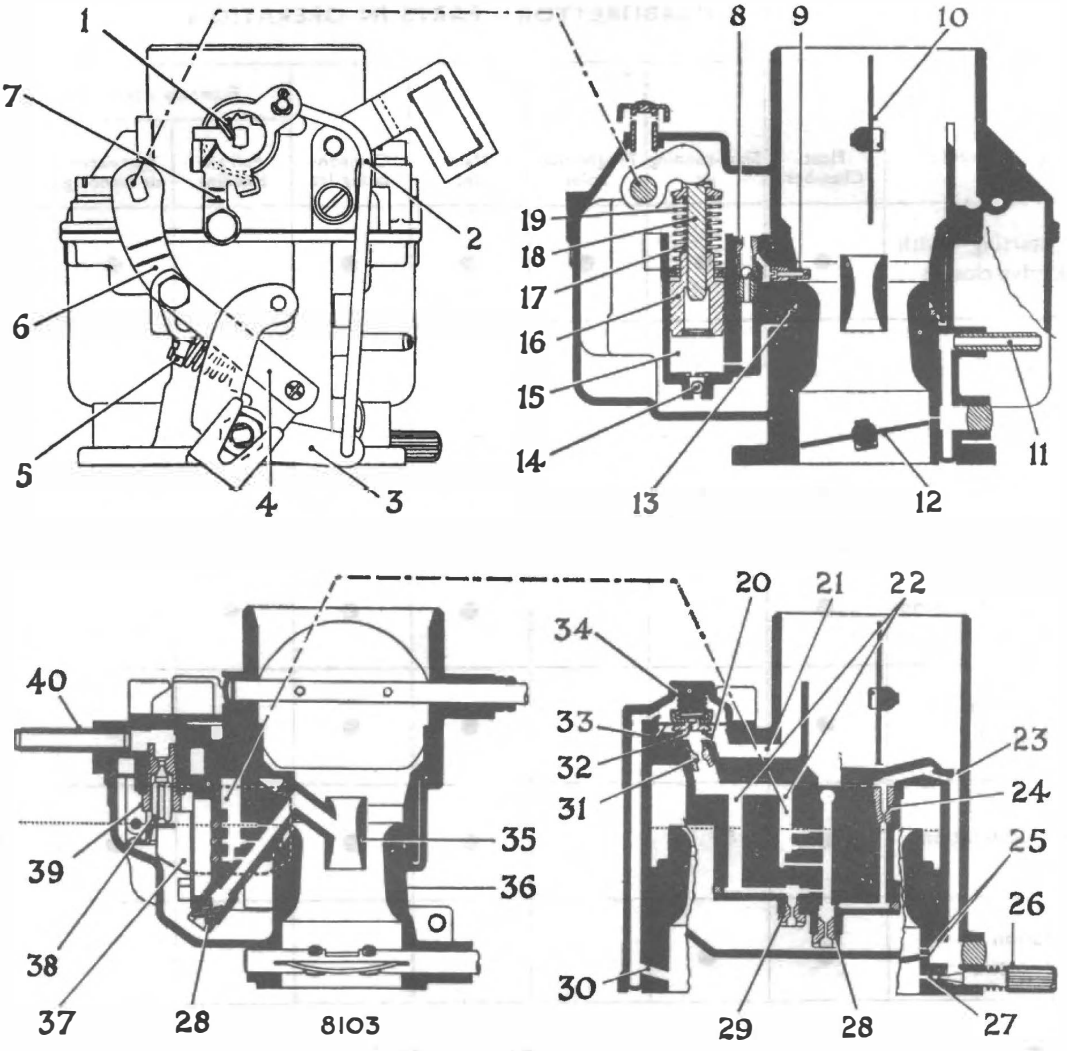

1. CHOKE VALVE CLOSING SPRING
2. CONNECTING ROD
3. FLOATING LEVER ON THROTTLE SHAFT
4. ACCELERATOR PUMP CONNECTING LINK
5. SLOW RUNNING SPEED ADJUSTMENT SCREW
6. ACCELERATOR PUMP LEVER
7. CHOKE VALVE CONTROL LEVER
8. ACCELERATOR PUMP DELIVERY BALL VALVE
9. ACCELERATOR PUMP DISCHARGE JET
10. CHOKE VALVE
11. VACUUM ADVANCE CONNECTION
12. THROTTLE
13. RUBBER "O" RING
14. ACCELERATOR PUMP SUCTION BALL VALVE
15. ACCELERATOR PUMP BORE
16. ACCELERATOR PUMP PISTON
17. ACCELERATOR PUMP PISTON OPERATING SPRING
18. ACCELERATOR PUMP PLUNGER
19. ACCELERATOR PUMP PISTON AND PLUNGER RETURN SPRING
20. FULL THROTTLE AIR BLEED HOLE
21. AIR FEED PASSAGE TO ECONOMY DEVICE
22. CAPACITY WELLS
23. SLOW RUNNING PASSAGE AIR BLEED
24. SLOW RUNNING JET
25. PROGRESSION HOLES
26. SLOW RUNNING MIXTURE VOLUME CONTROL SCREW
27. SLOW RUNNING MIXTURE OUTLET
28. MAIN JET
29. COMPENSATING JET
30. VACUUM FEED PASSAGE TO ECONOMY DEVICE
31. VENTILATION SCREW
32. VALVE FACE ON DIAPHRAGM
33. DIAPHRAGM
34. DIAPHRAGM RETURN SPRING
35. SMALL VENTURI (PART OF EMULSION BLOCK)
36. LARGE VENTURI OR CHOKE TUBE (PART OF MAIN BODY)
37. TWIN FLOATS
38. FLOAT NEEDLE VALVE
39. FLOAT NEEDLE VALVE SEAT
40. FUEL INLET CONNECTION

Fig. 2. *Zenith IV carburettor—Schematic sectional views*

The volume control screw (26) is used to adjust the amount of fuel metered by the slow running jet and emulsified by air entering through the bleed hole (23). This bleed hole (23) also prevents syphoning of the fuel from the float chamber, through the slow running fuel feed system when this system is not working.

The two small holes (25) communicate with the slow running fuel feed channel. Their purpose is to provide additional mixture before fuel commences to discharge from the main and compensating jets. This ensures smooth progressive increase of engine speed or torque, and freedom from hesitation as the throttle is opened from the slow running position.

Part throttle driving — See Fig. 2

As the throttle is opened beyond the fast idling position, depression in the choke tube (36) causes discharge of emulsified fuel into the small venturi (35), which mixes with the air, flowing through the large choke or venturi (36) and throttle opening into the inlet manifold.

This fuel is metered by the main jet (28) and compensating jet (29) which feeds the capacity wells (22). The amount of fuel metered is dependent upon the action of the air bleed system in the emulsion block, which is controlled by the economy device.

Under part throttle driving conditions the economy device allows full air bleeding through the ventilation screw (31). This arrangement provides the weaker mixture that gives the economical consumptions obtained under this driving condition. Combustion of this weaker mixture is assisted considerably by the extra advance given by the vacuum advance mechanism.

Economy device — See Fig. 2

This consists of a diaphragm (33), diaphragm valve (32), diaphragm return spring (34) and cover cap. Inlet manifold depression is fed through the channel (30) to the upper-side of the diaphragm (33) inside the cover cap. These parts operate to control the amount of air bleeding to the passages in the emulsion block.

Until the throttle is opened a considerable amount, inlet manifold vacuum is sufficient to allow atmospheric pressure to lift the diaphragm (33) against its return spring (34) force. This lifts the valve face (32) on the lower side of the diaphragm away from its seating and allows the bleed air flow to be controlled by the ventilation screw (31).

With wide throttle openings, the inlet manifold vacuum decreases, and the diaphragm return spring (34) forces the diaphragm down so that the valve face (32) seats onto the valve seat face in the carburettor body. This reduces the air flow through the vent screw to the amount that passes through the small air bleed hole (20).

Wide throttle driving — See Fig. 2

Under this driving condition the main jet (28) and compensating jet (29) still meter the fuel. They are affected by the much reduced air bleed to the emulsion block channels, and thus provide the required mixture under these driving conditions.

The reduced air bleed is brought about by the action of the economy device.

Acceleration — See Fig. 2

Quick opening of the throttle causes a sudden inrush of air, through the choke tube, to which the main and compensating jets cannot immediately provide the fuel needed to ensure immediate engine response.

To overcome this, a temporary extra supply of fuel is needed, which is metered by the accelerator pump jet, while the accelerator pump piston is moving downwards. When the accelerator pump piston (16) is at the top of its stroke, the pump cylinder (15) is filled with fuel that enters through the pump suction non-return ball valve (14).

As the carburettor throttle opens, the piston rod (18) is forced down, and both the inner spring (17) and outer spring (19) are compressed. Expansion of the inner spring (17), that bears on the top face of the piston (16) forces the piston down which discharges fuel through the non-return ball valve assembly (8) and accelerator pump jet (9). Movement of the piston is limited by a stop on the lower end of the rod (18), and piston movement continues until the stop is reached after the rod has ceased to move downwards in advance of the piston.

The outer spring (19) returns the accelerator pump piston (16) and rod (18) to the top of its stroke, which re-charges the cylinder with fuel, when the throttle is closed as the accelerator pedal is released.

The ball valve (8) has two seatings. The ball lifts onto its upper seating to close off the air vent hole in the top of the valve body, while the accelerator pump is operating, and returns to its lower seating at the end of the pump stroke. It then allows air venting of the accelerator pump jet (9) which prevents the jet from discharging under wide throttle openings and causing excessive fuel consumption.

The accelerator pump stroke is adjustable to suit climatic conditions as described under "ADJUSTMENTS".

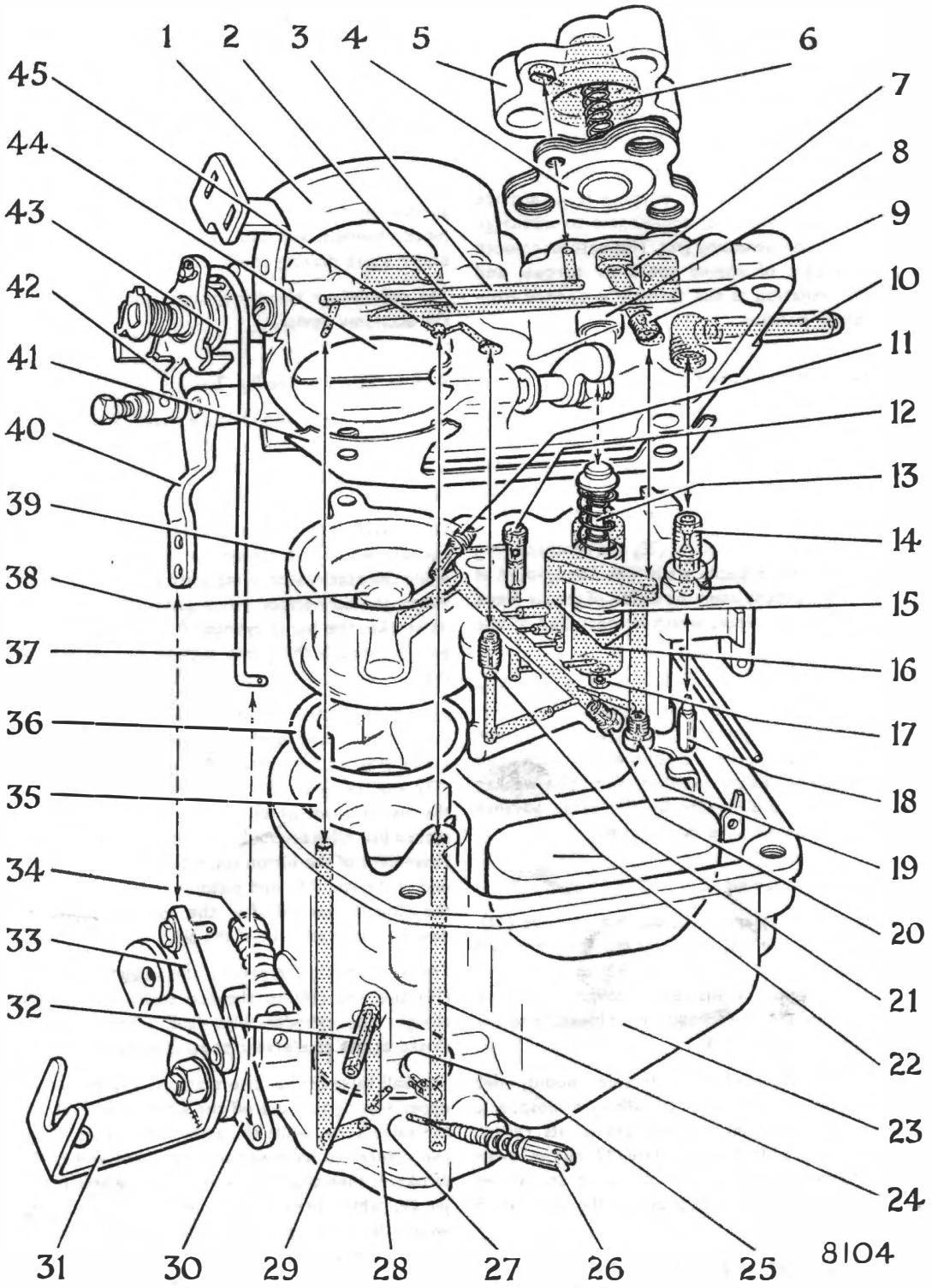

Fig. 3. *Zenith IV carburettor—External and internal details, jets and drillings*

Key to Fig. 3

1. CARBURETTOR TOP BODY
2. AIR FEED PASSAGE TO ECONOMY DEVICE
3. VACUUM FEED PASSAGE TO ECONOMY DEVICE FROM 28
4. DIAPHRAGM
5. DIAPHRAGM COVER
6. DIAPHRAGM RETURN SPRING
7. FULL THROTTLE AIR BLEED HOLE
8. FLOAT CHAMBER AIR VENT
9. VENTILATON SCREW
10. FUEL INLET CONNECTION
11. ACCELERATOR PUMP DISCHARGE JET
12. ACCELERATOR PUMP DELIVERY BALL VALVE ASSEMBLY
13. ACCELERATOR PUMP PLUNGER
14. FLOAT NEEDLE VALVE SEAT
15. ACCELERATOR PUMP PISTON
16. CAPACITY WELLS
17. ACCELERATOR PUMP SUCTION BALL VALVE
18. FLOAT NEEDLE VALVE
19. COMPENSATING JET
20. MAIN JET
21. SLOW RUNNING JET
22. TWIN FLOATS
23. MAIN BODY AND FLOAT CHAMBER
24. SLOW RUNNING FUEL FEED PASSAGE
25. PROGRESSION HOLES
26. SLOW RUNNING MIXTURE VOLUME CONTROL SCREW
27. SLOW RUNNING MIXTURE OUTLET
28. VACUUM FEED TO ECONOMY DEVICE
29. THROTTLE
30. FLOATING LEVER ON THROTTLE SHAFT
31. THROTTLE LEVER
32. VACUUM ADVANCE CONNECTION
33. ACCELERATOR PUMP CONNECTING LINK
34. SLOW RUNNING SPEED ADJUSTMENT SCREW
35. LARGE VENTURI OR CHOKE TUBE (PART OF MAIN BODY)
36. RUBBER "O" RING
37. CONNECTING ROD
38. SMALL VENTURI (PART OF EMULSION BLOCK)
39. EMULSION BLOCK
40. ACCELERATOR PUMP LEVER
41. GASKET — UPPER BODY TO MAIN BODY
42. CHOKE VALVE CONTROL LEVER
43. CHOKE VALVE CONTROL LEVER RETURN SPRING
44. CHOKE VALVE
45. SLOW RUNNING PASSAGE AIR BLEED

STARTING PROCEDURE

Cold starting

When starting the engine from cold, pull the choke control out fully, switch on the ignition and operate the starter.

DO NOT DEPRESS THE ACCELERATOR PEDAL.

The engine should start almost immediately. When the engine has started, the choke control should be pushed in far enough to obtain even running and then, as soon as possible, to within about $\frac{1}{2}$ in. (12 mm.) of its fully back position. In this position the idling speed is increased enough to prevent stalling during the warming up period. When the engine has reached its normal operating temperature, the choke control must be pushed back as far as possible.

Hot starting

Switch on the ignition and operate the starter. If the engine does not start immediately, slightly depress the accelerator pedal while operating the starter.

Extremely hot conditions — starting

If difficulty is experienced under these starting conditions, press the accelerator pedal down fully and hold it in this position while operating the starter.

DO NOT AGITATE THE ACCELERATOR PEDAL.

Directly the engine starts release the accelerator pedal immediately to prevent overspeeding of the engine.

DIAGNOSIS OF FAULTS — See Figs. 3, 4, 5 and 6

The carburettor CANNOT function correctly if the ignition system, fuel supply system, compression or exhaust system are at fault. Unless known to be in perfect condition, these items must be checked as follows before dealing with complaints that can be caused by faulty carburation.

Ignition system

Check spark plug condition. Clean and set gaps.

Check condition and tightness of H.T. and L.T. leads.

Check condition and setting of contact breaker points and contact moving point spring tension.

Ensure that the centrifugal and vacuum advance mechanisms are working correctly.

Check ignition timing. Only small variations from the correct static timing are permissible.

Fuel system

Ensure that an adequate supply of fuel is being delivered to the float chamber.

Check that fuel pump output pressure is correct to the figures given under "Fuel System" in Data Section of this manual.

Examine induction manifold and carburettor flange for air leaks.

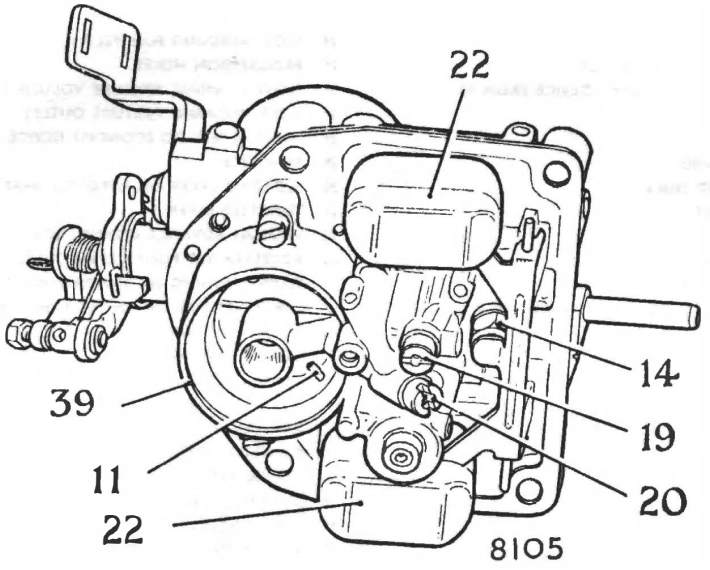

Fig. 4. *Top cover removed showing emulsion block and floats in position, main jet and compensating jet*

Check that the inlet manifold drain pipe is clean.

Ensure that air cleaner is fitted correctly and not restricting air supply to carburettor, due to the element being dirty.

Compression

Check valve clearances and compressions.

Make sure valves are not sticking.

Exhaust system

Check that exhaust pipe has not become damaged or blocked.

Excessive fuel consumption — See Figs. 3, 4 and 5.

Ensure that this complaint is not caused by heavy traffic conditions, hilly country or very adverse driving conditions.

1. Check that the carburettor is not flooding Intermittently due to a faulty needle valve and seating or defective float lever.

2. Check that the jets in the carburettor are to the size specified in the Data Section under "Fuel System". New jets should be fitted if it is suspected that any jet has been damaged by cleaning incorrectly with a metal point, or tampered with in any way. It should be noted that the main (20) and compensating jets (19) are cadmium plated, to distinguish them from other jets of similar size and shape, which have a brass finish. Although the brass finished and cadmium plated jets appear to be similar exactly, their flow characteristics are entirely different, and therefore CADMIUM PLATED MAIN AND COMPENSATING JETS MUST ALWAYS BE USED IN THIS PARTICULAR CARBURETTOR.

   Washers are not fitted, or needed under these jets.

3. Remove the air cleaner and check that the choke valve is opening fully when the choke control is pushed backwards to the full extent of its travel.

4. Check that the slow running channel air bleed hole (45) is clear. Stoppage of this hole will allow the slow running jet to meter fuel throughout the whole throttle range and thus provide excess fuel. Without the necessary air vent supplied by the hole (45), fuel can syphon from the float chamber through the slow running system.

5. Dismantle the economy device to check the condition of the diaphragm (4) and its two gaskets used on its upper and lower faces. If a replacement diaphragm Is needed also fit a new diaphragm return spring (6) and gaskets. The tension of this spring is important as it controls the operation of the economy device. When re-assembling the economy device, see that the spring beneath the cover is in position and located squarely in the recess of the metal cup on

the upper face of the diaphragm. The three screws that hold the cover to the carburettor top body, must be tightened evenly. Any leakage under the cover face will affect the amount of depression needed to overcome the diaphragm return spring pressure that returns the diaphragm to the closed position. Incorrect action of the economy device diaphragm will increase the fuel consumption by preventing the supply of an economy mixture on part throttle openings.

6. Remove the accelerator pump delivery valve (12) and check that its ball valve moves up and down quite freely. Sediment or gum can stick the ball valve to its upper seating, and this will allow fuel to be drawn from the accelerator pump, when the pump is not operating. This increases the fuel consumption. Usually any tendency for the ball to stick can be overcome by washing the valve assembly in methylated spirits.

7. Check that the "O" ring (36) is in good condition and forming a seal between the emulsion block and carburettor body around the choke tube upper end.

Insufficient top speed — See Fig. 3

1. Check that the throttle lever (31) is opening onto its full throttle stop when the accelerator pedal is fully depressed. Incorrectly fitted carpets can prevent full throttle movement.

2. Check that main and compensating jets (20) and (19) are those specified in the Data Section under "Fuel System".

3. Check that main and compensating jets are not partially blocked and that their air bleed passages are clear, not forgetting the full throttle air bleed (7) drilling inside the economy device.

4. Check that the needle valve seat is free from obstruction and that the float arm is not damaged.

5. Check that the economy device spring (6) is in position. It can be lost by careless servicing of the carburettor.

Faulty slow running — See Figs. 3, 5 and 6

This is caused by an incorrect slow running mixture due either to wrong adjustment of the volume control screw (26) blocked or partly blocked slow running jet (21), or supply of excess air.

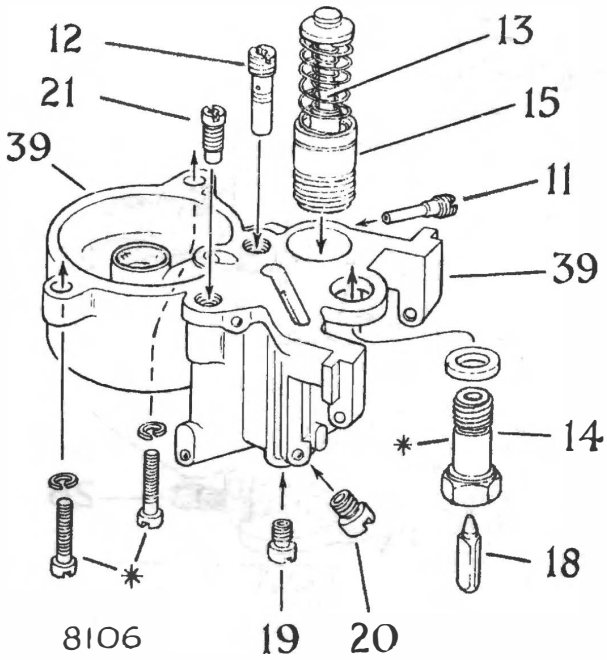

* SCREWS AND SEATING HOLDING EMULSION BLOCK TO TOP BODY

Fig. 5. *Emulsion block fully dismantled*

1. Remove the carburettor top body (1) emulsion block (39) and slow running jet (21). Blow through the jet and passage ways as shown in Fig. 3 with clean compressed air. The long passage way, in the main body of the carburettor can be blown through without removing the carburettor from the inlet manifold, first from below through the volume control screw hole, after removing the volume control screw and blocking the upper end of the passage way with a finger, then from the top with the volume control screw replaced and rotated onto its seat. This ensures that the slow running outlet, and two progression holes are cleared. Check that the volume control screw point is not damaged. Adjust the volume control screw (26) so that it just seats by finger NOT SCREWDRIVER rotation and then rotate it back by 1½ turns.

2. Check that the volume control screw (26) and slow running speed adjustment screw (34) springs exert enough pressure under the screw heads to prevent them from rotating through the effects of engine vibration.

3. Adjust the slow running mixture and speed as described under "ADJUSTMENTS".

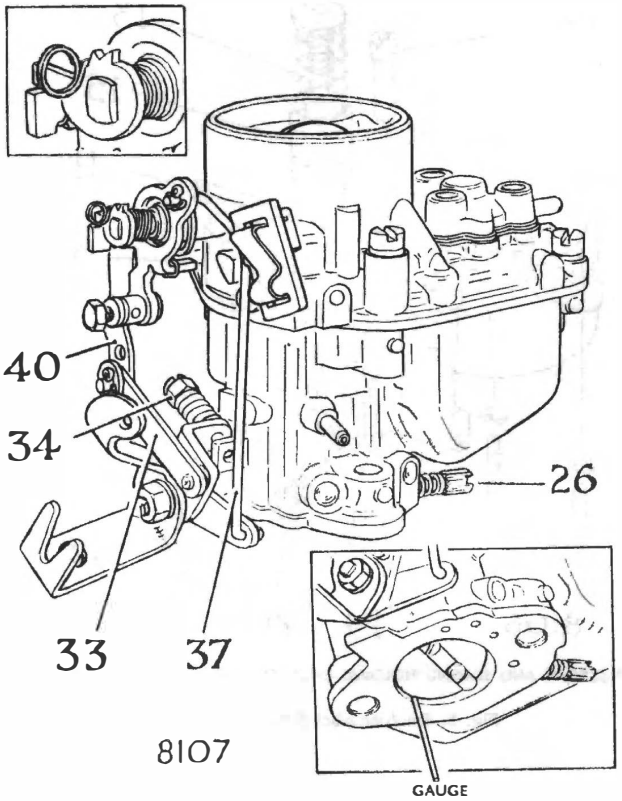

Fig. 6. *External linkage and slow running adjustments*

Flat spot or hesitation at small throttle openings — See Fig. 3

The reason for this fault is a weak mixture occurring immediately the throttle opens from the slow running position, before the main and compensating jets come into operation.

The possible causes are:

1. Incorrect adjustment of the slow running mixture volume control screw (26). See under "ADJUSTMENTS — Slow running" on page 17 of this section.

2. Progression holes (25) blocked or partly blocked.

3. Worn throttle spindle or other possible causes of air leakage into the induction system.

4. Vacuum advance pipe disconnected from the carburettor, pipe or its connection loose, or vacuum advance diaphragm leaking.

Poor acceleration — See Figs. 3, 5 and 6

Should the engine show signs of hesitation and lack of response when the throttle is opened suddenly, the following should be checked.

1. Remove the air cleaner, and while looking into the carburettor, with the engine stopped, open the throttle suddenly over its whole range of movement. Fuel should then be discharged from the accelerator pump jet (11). If little or no fuel is discharged continue with the following procedure.

2. Remove the carburettor top body (1), and emulsion block (39) from the top body. Check that the accelerator pump piston (15) moves freely in its cylinder and is returned by the outer spring around the plunger.

3. Remove the accelerator pump delivery valve (12) and accelerator pump jet (11). Blow through these items and their feed passages with clean compressed air.

4. With the piston (15) removed syringe fuel through the ball valve (17) at the base of the pump bore to make certain that the ball valve will seat on the downward stroke of the piston (15). DO NOT ATTEMPT TO REMOVE THE BALL VALVE SPRING WIRE RETAINER.

5. Refit the accelerator pump piston (15), delivery valve (12) and the accelerator pump jet (11).

6. Hold the emulsion block in a shallow tray of fuel so that the lower part of the accelerator pump is immersed in fuel. Operate the fuel pump. Fuel should then be discharged from the jet (11).

7. Refit the emulsion block (39) to the carburettor top body.

8. Remove the economy device cover and check that the diaphragm (4) is in good condition. During acceleration the valve face on the underside of the diaphragm (4) closes off the passage that allows full air flow through the ventilation screw (9). This reduces the air bleed, causing faster emptying of the capacity wells (16) which supplements the fuel supplied by the pump jet (11). Any air leakage through a faulty diaphragm, or through the diaphragm gaskets, will alter the economy device action.

Difficult starting from cold — See Figs. 3 and 6

Reasons that prevent the carburettor from providing the very rich mixture needed for cold starting conditions are:

1. Lack of fuel supply to the carburettor float chamber.
2. Choke control inner cable adjusted incorrectly, which stops the lever (42) from moving over its whole range of travel, onto its stop against the carburettor body, when the choke control is pulled fully out. This will prevent the choke valve from closing, and can also keep the throttle from opening to the fast idle position for cold starting and cold running.
3. Choke valve not closing when the choke control is pulled out fully. This can occur even when the lever (42) operates correctly, because this lever does not close the choke valve, it only allows the light spring on the choke valve spindle outer end to rotate the choke valve spindle. Any stiffness in the choke valve spindle movement can prevent the choke valve from closing when the choke is pulled out. This can be very deceptive.

   The choke valve action can be checked by pulling the choke control out, checking that the lever (42) comes against its stop, then rotating the outer end of the choke valve spindle in a clockwise direction as far as possible, and releasing the spindle. If the spindle is operating correctly the choke valve will then shut with a distinct snap sound.
4. Interconnection rod (37) between choke operating lever (42) and floating lever (30) not opening the throttle to the fast idle position. To check and adjust this setting see under "ADJUSTMENTS".
5. Gum has been known to form on the float needle and stick it to the needle valve seat when the engine has stopped. This prevented entry of fuel to make up fuel lost by evaporation as the engine cooled down and in consequence the engine could not start. If this occurs the whole fuel system should be cleaned out.

Difficult starting when hot

The reason for this trouble is a very rich mixture caused by any one or more of the following faults.

1. Rich fuel vapour in the inlet manifold due to pumping of the accelerator pedal.
2. Carburettor flooding due to faulty needle valve and seat.
3. Needle valve seat not properly tightened into top body of the carburettor.
4. Fuel level in float chamber too high because of wrong setting of the float mechanism.
5. Fuel supply pressure too high.

ADJUSTMENTS

Slow running — See Fig. 6

The correct slow running speed is given in the Data Section under "Fuel System — Carburettor".

In addition to the carburettor slow running system, reliable and even slow running depends upon good ignition, correct ignition timing, correct valve clearances, even compressions and freedom from air leaks in the induction system.

If any one or more of these items are at fault adjusting the carburettor slow running adjustments will prove difficult.

This adjustment is made when the engine is HOT in the following manner.

1. Adjust the slow running speed adjustment screw (34) until the idling speed is a little faster than normal.
2. Unscrew the slow running mixture volume control screw (26) in an anti-clockwise direction until the engine begins to "hunt", that is, runs on a rich slow running mixture which will decrease the engine speed.

   The slow running mixture volume control screw is quite sensitive to adjust because it regulates the amount of fuel used for slow running. It does NOT control the air feed for slow running.
3. Screw in the volume control screw (26) just enough to stop the engine from "hunting".
4. If the engine speed is now too high reset the throttle adjusting screw (34). This may cause a resumption of "hunting" and further adjustment of the slow running volume control screw (26) may be necessary.
5. Check that the throttle returns to its stop each time that the accelerator pedal is released. Stiffness in the accelerator linkage can prevent this.

The correct idling speed is given in the Data Section under "Fuel System".

Any "hesitancy" or "flat spot", as the throttle is moved from the idling position, when starting from rest or

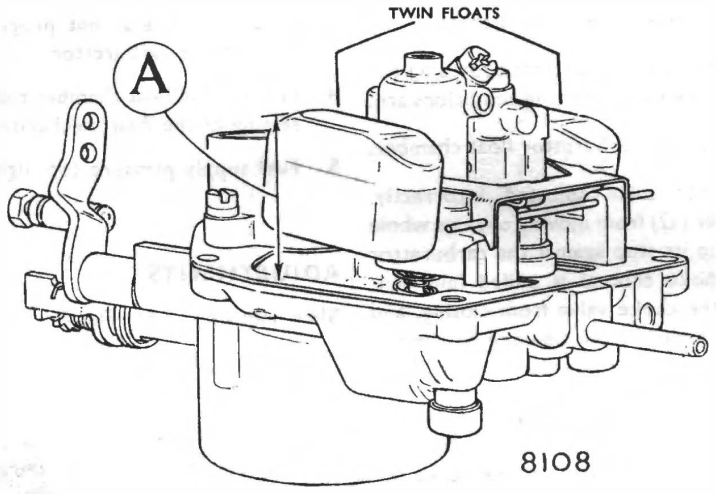

Fig. 7. *Float level settings*

driving slowly, is an indication that the slow running mixture is either too weak or too rich and that further slight adjustment may be needed.

Accelerator Pump Stroke — See Fig. 6

The travel of the accelerator pump piston can be adjusted to give a short or long stroke, to meet summer or winter conditions.

This adjustment is made by altering the position of the link (33) connection in the fuel pump operating lever (40). In Fig. 6 it is shown in the position that gives the shortest pump stroke.

Throttle fast idling position — for cold starting
See Fig. 6

The throttle fast idling position depends upon the length between the outer ends of the interconnecting rod (37). This length is set during the manufacture and normally should not require further adjustment.

When a complaint is made that starting is difficult under cold conditions the fast idle adjustment should be checked by one of the following methods. The second method, which requires removal of the carburettor, should always be used when making this adjustment for extreme cold starting conditions.

Method 1 — *Without removing carburettor*
See Figs. 3 and 6

1. Disconnect the choke control inner cable from the lever (42).
2. Remove the idle speed adjustment screw (34) and take off its stop spring. Replace the screw and rotate it until it just contacts the carburettor body while the throttle is held fully closed.
3. Screw in the slow running speed adjusting screw (34), to open the throttle, by a further ten half turns of screw rotation.
4. Carefully bend the upper end of the connecting rod (37) so that the floating lever (30) just contacts the rear face of the lever, carrying the slow running speed adjustment screw (34), when the lever (42) is moved to the full extent of its travel.
5. Check, by releasing the slow running speed adjustment screw (34) by half a turn and then moving the lever (42) over its whole range of movement. If the rod (37) has been set correctly the throttle lever (31) will just begin to move.
6. Reconnect the choke inner cable to the arm and check that choke cable adjustment is correct.
7. Remove the slow running speed adjustment screw (34) and refit its spring. Refit screw and adjust so that the normal idling speed is obtained.

Method 2 — *Removing the carburettor* — See Figs. 3 and 6

1. Remove the carburettor from the engine.
2. Obtain a gauge, for insertion between the throttle butterfly and throttle barrel to the fast idle throttle setting given in the Data Section under Fuel System. This can be the shank of a drill or a wire of this diameter or wire flattened to this dimension.

3. Move the choke lever (42) to the full extent of its travel. If the connecting rod (37) is correctly set the throttle will have opened just enough to allow the gauge to be inserted between the throttle edge and throttle bore, in a position at a right angle to the centre of the throttle spindle.
4. If necessary carefully set the connecting rod (37) at its upper curved end, so that the throttle opens to the gauge thickness when the lever (42) is moved fully over.
5. Replace the carburettor and adjust the choke cable

Fuel level — See Fig. 7

To check the fuel level remove the carburettor top body and invert it so that the float holds the float needle on its seat. In this position the highest point (A) of the float should be 32—33 mm. from the gasket face.

If necessary bend the float arm, or tag on the float arm, as needed, or fit a thinner or thicker washer under the needle valve seating.

Choke control

The choke control inner cable should be adjusted so that its operating knob is about 2 mm. from the facia, when the choke operating lever is against its "OFF" stop in the carburettor.

Choke valve return spring tension — See Fig. 2

For most cold starting conditions the looped end of the choke valve return spring (1) should be in the vee notch that gives the highest opening movement of the choke valve as shown in Fig. 2. At very low temperatures the spring tension may need increasing by moving the looped end into one of the other two positions, so that the choke valve opening tension is increased.

Full throttle position and accelerator pedal position

An adjustment for setting the accelerator pedal position is provided at the end of the throttle operating shaft.

This adjustment should be set so that full throttle opening is obtained at the carburettor when the accelerator pedal is 1 in. (25 mm.) from the floor covering.

CLEANING IN POSITION — See Figs. 3, 4 and 5

This carburettor can be completely cleaned without removing it from the engine, provided the following procedure is adhered to.

1. Remove the air cleaner. Disconnect the rod (37) at its upper curved end, and the link (33) from the lever (40), noting which of the two holes in the lever to which the link is connected.
2. Remove the fuel feed pipe from its connection (10).
3. Remove the four cheese headed screws holding the top body (1) to the main body (23), and lift off the top body complete with emulsion block assembly (39) as shown in Fig. 4.

Cleaning lower body — See Figs. 3, 4 and 5

1. Remove fuel from the float chamber bowl in the main body with a syringe and clean the bowl by blowing out with clean compressed air.
2. Remove the volume control screw (26) and with a finger block off the upper end of the passage (24). Hold a compressed air feed nozzle in the volume control screw hole and blow air through the slow running outlet (27). Replace the volume control screw (26) and screw it lightly onto its seating.
3. Blow air into the upper end of the passage (24). This cleans the progression outlet holes (25).
4. Unscrew the volume control screw (26) one turn from its screwed down position.
5. Disconnect the vacuum advance flexible feed pipe from its connection (32) and blow air through this passage and the passage connecting to the outlet (28).

This completes the cleaning of the carburettor lower body.

Cleaning emulsion block — See Fig. 5

1. Remove the twin float assembly (22) by withdrawing its pivot pin. Also remove the float needle valve (18).
2. Remove the two cheese headed screws and float needle valve seating (14) and lift the emulsion block assembly, taking care to prevent the accelerator pump piston (15) assembly from becoming damaged, as it can fall out as the emulsion block is removed.
3. Remove the slow running jet (21) pump discharge valve (12), pump jet (11), compensating jet (19) and main jet (20). NO ATTEMPT should be made to remove the non-return ball valve (17).
4. Wash the jets and pump discharge valve in fuel. Also wash the accelerator pump, piston, piston bore, and non-return ball valve (17) with fuel.
5. Blow through the non-return valve (17) from its lower side, all jets, the pump discharge jet (11) and the needle valve seat (14) with clean compressed air.
6. Blow through all the passages shown in the emulsion block (39) in Fig. 1.
7. Refit all parts to the emulsion block that were removed for cleaning.

Cleaning top body — See Fig. 3

1. Remove the economy device cover (5), spring (6) and diaphragm (4). Inspect condition of diaphragm and renew if required.

continued on page 22

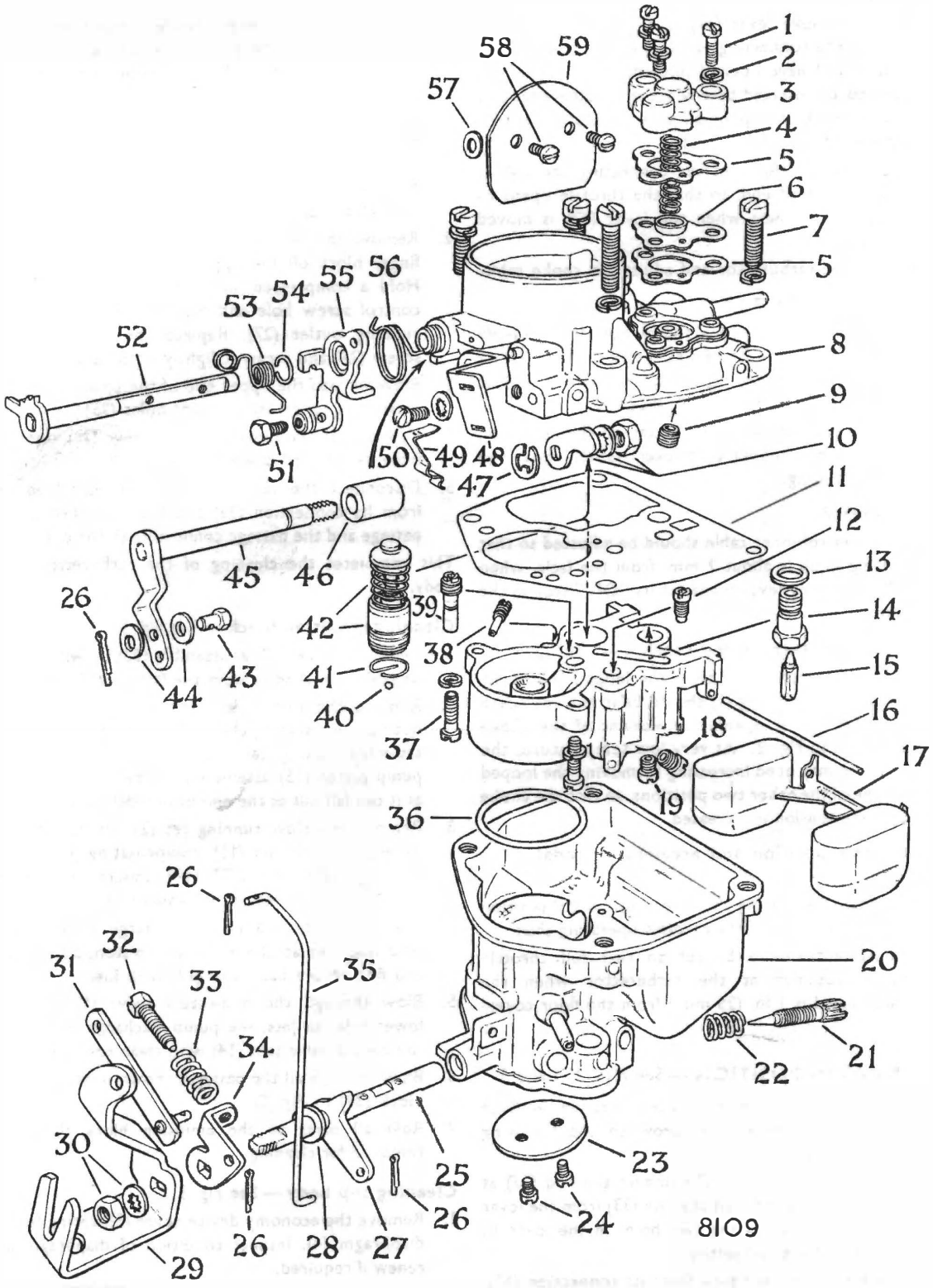

Fig. 8. *Zenith IV carburettor—Exploded view*

Key to Fig. 8

1. FIXING SCREW—ECONOMY DEVICE COVER—THREE
2. SPRING WASHER — THREE
3. ECONOMY DEVICE COVER
4. DIAPHRAGM RETURN SPRING
5. GASKETS ABOVE AND BELOW DIAPHRAGM—TWO
6. ECONOMY DEVICE DIAPHRAGM
7. TOP COVER FIXING SCREWS AND SPRING WASHERS—THREE SHORT AND ONE LONG
8. FLOAT CHAMBER COVER AND INTAKE
9. VENTILATION SCREW
10. ACCELERATOR PUMP INTERNAL LEVER, NUT AND SHAKEPROOF WASHER
11. GASKET
12. SLOW RUNNING JET
13. WASHER FOR NEEDLE SEATING
14. FLOAT NEEDLE VALVE SEATING
15. FLOAT NEEDLE VALVE
16. FLOAT ARM PIVOT
17. TWIN FLOATS
18. MAIN JET
19. COMPENSATING JET
20. COMBINED MAIN BODY AND FLOAT CHAMBER
21. SLOW RUNNING MIXTURE VOLUME CONTROL SCREW
22. SPRING FOR VOLUME CONTROL SCREW
23. THROTTLE VALVE
24. THROTTLE FIXING SCREW — TWO
25. THROTTLE SPINDLE
26. SPLIT PINS
27. FLOATING LEVER
28. PLAIN WASHER
29. THROTTLE LEVER
30. THROTTLE LEVER FIXING NUT AND SHAKEPROOF WASHER
31. ACCELERATOR PUMP LINK
32. SLOW RUNNING SPEED ADJUSTMENT SCREW
33. SPRING FOR ADJUSTMENT SCREW
34. THROTTLE STOP LEVER
35. INTERCONNECTION ROD
36. RUBBER "O" RING
37. EMULSION BLOCK FIXINGS SCREWS AND SPRING WASHERS—TWO
38. ACCELERATOR PUMP DISCHARGE JET
39. ACCELERATOR PUMP DISCHARGE VALVE
40. ACCELERATOR PUMP INTAKE BALL VALVE
41. INTAKE BALL VALVE RETAINER
42. ACCELERATOR PUMP PISTON, PISTON ROD AND SPRING ASSEMBLY
43. PIVOT PIN FOR PUMP LINK
44. WASHERS — TWO PLAIN
45. ACCELERATOR PUMP SPINDLE AND LEVER
46. DISTANCE PIECE
47. RETAINING RING—ACCELERATOR PUMP SPINDLE
48. CHOKE CABLE BRACKET
49. CLIP — CHOKE CABLE TO BRACKET
50. BRACKET FIXING SCREW AND SHAKEPROOF WASHER
51. SET SCREW—CHOKE CABLE TO LEVER TRUNNION
52. CHOKE VALVE SPINDLE
53. CHOKE VALVE CLOSING SPRING
54. CIRCLIP
55. CHOKE VALVE CONTROL LEVER
56. CHOKE VALVE CONTROL LEVER RETURN SPRING
57. THIN BRASS WASHER—USED BETWEEN CHOKE VALVE AND CARBURETTOR BORE
58. CHOKE VALVE FIXING SCREWS — TWO
59. CHOKE VALVE

2. Blow through the passages (2) and (3), the anti-syphon drilling (45), and the ventilation screw (9). Make sure that the small full throttle air drilling (7) and the vacuum hole in the cover (5) are clear.

3. Blow through the fuel feed (10) and the air vent (8).

4. Refit the economy device parts (4), (5) and (6), using new joints above and below the diaphragm (4).

Reassembly

This is a reversal of the dismantling procedure. A new joint should be used between the carburettor top body and emulsion block, and carburettor lower body.

The accelerator pump operating link should be replaced in the same hole in the pump operating lever, from which it was removed, if this position gave satisfactory acceleration.

A fully exploded view is given in Fig. 8.

TO REMOVE AND REFIT

To remove

Remove air cleaner.

Disconnect fuel feed pipe, throttle operating shaft and choke control.

Remove two nuts and washers holding the carburettor to its flange on the inlet manifold.

To refit

Before refitting the carburettor its flange should be checked for flatness on a small surface plate, or other suitable flat surface. Using a straight edge is not satisfactory.

After refitting the carburettor, the choke control inner cable should be adjusted as described under "ADJUSTMENTS".

CARBURETTOR

TYPE — SOLEX B.32 P.A.I.A.S.

	Page
DESCRIPTION	24
OPERATION CHART	25
OPERATION	29
—Float chamber	29
—Starting from cold	29
—Slow-running	30
—Normal acceleration to cruising speed	31
—Part throttle driving	31
—Wide and full throttle driving	32
—Secondary throttle barrel	32
—Acceleration and accelerator pump	35
STARTING THE ENGINE	
—From cold	35
—From extreme cold	35
—Partly warm	35
—When hot	36
DIAGNOSIS OF FAULTS	
—Excessive fuel consumption	36
—Insufficient top speed	37
—Faulty slow-running	37
—Flat spot at small primary throttle opening	38
—Flat spot at wide primary throttle opening	38
—Poor acceleration	38
—Difficult starting from cold	39
ADJUSTMENTS	
—Slow running	39
—Choke control cable	39
—Secondary throttle closed position stop	39
—Secondary throttle operating rod	40
—Primary throttle fast idle position	40
—Choke valve return spring tension	41
—Primary full throttle position and accelerator pedal position	41
CLEANING	41
REMOVAL AND REFITTING	44
NOTES ON DISMANTLING AND REASSEMBLY	44

SOLEX P.A.I.A.S. CARBURETTOR

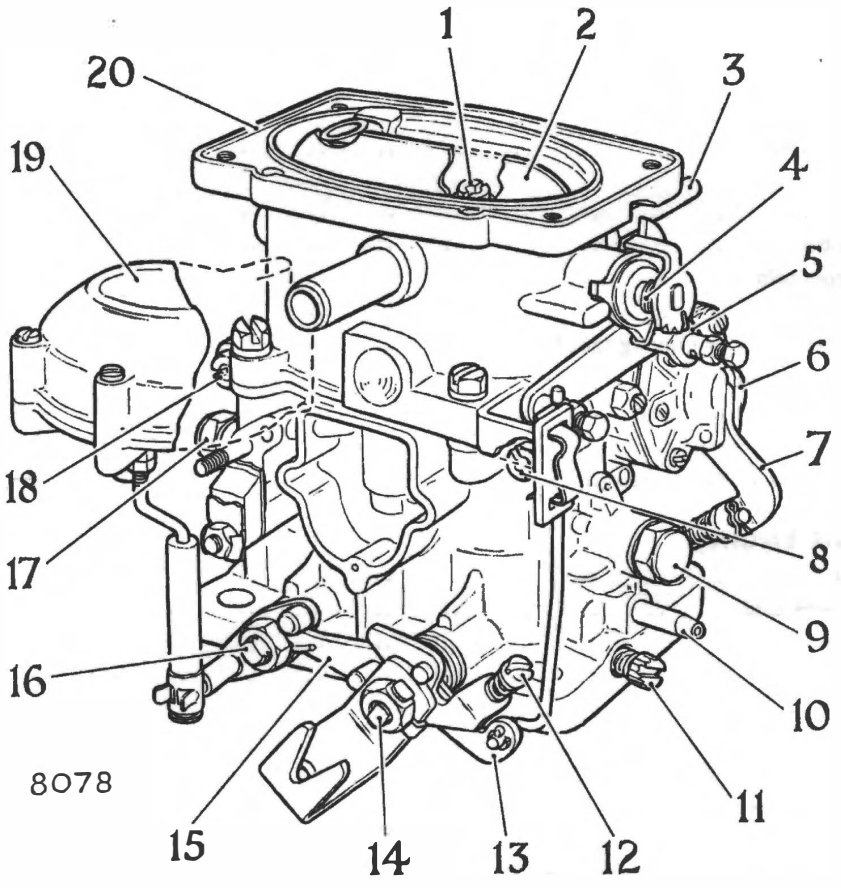

1. CARBURETTOR TOP BODY AND ACCELERATOR PUMP JET FIXING SCREW
2. CHOKE VALVE
3. FUEL INLET CONNECTION
4. CHOKE VALVE CLOSING SPRING
5. CHOKE VALVE CONTROL LEVER
6. ACCELERATOR PUMP
7. ACCELERATOR PUMP OPERATING LEVER
8. PRIMARY THROTTLE BARREL SLOW RUNNING JET
9. PRIMARY THROTTLE BARREL MAIN JET
10. VACUUM ADVANCE CONNECTION
11. SLOW RUNNING MIXTURE VOLUME CONTROL SCREW
12. SLOW RUNNING SPEED ADJUSTMENT
13. LEVER—OPERATED BY CHOKE CONTROL TO OPEN THROTTLE FOR STARTING
14. PRIMARY THROTTLE
15. OVERRIDING LEVER
16. SECONDARY THROTTLE
17. SECONDARY THROTTLE BARREL MAIN JET
18. SECONDARY THROTTLE BARREL PROGRESSION JET
19. SECONDARY THROTTLE OPERATING UNIT
20. CARBURETTOR TOP BODY AND FLOAT CHAMBER COVER

Fig. 1. *Solex B.32 P.A.I.A.S. carburettor — external view*

DESCRIPTION — See Fig. 1

The Solex B.32 P.A.I.A.S. carburettor is a twin choke downdraught carburettor. Its twin choke and twin throttle barrel arrangement overcome certain disadvantages met with on single choke carburettors when engine outputs are increased beyond moderate ratings. With a single fixed choke carburettor the power output of an engine can be increased by using a larger choke tube with suitable jet settings, provided the engine valves, valve ports and manifolds do not obstruct the extra air that can pass through the larger choke tube.

SOLEX B.32 P.A.I.A. CARBURETTOR — PARTS IN OPERATION

ENGINE REQUIREMENT	PRIMARY THROTTLE BARREL						SECONDARY THROTTLE BARREL	
	Float Chamber	Choke Valve	Slow-running Jet	Progression Holes	Main Jet	Accelerator Pump	Progression Holes	Main Jet
Starting from cold	●	●	●	●	●			
Slow running	●		●					
Light throttle	●		★	★	●			
Acceleration	●				●	●		
Two thirds throttle Secondary throttle opening	●				●		●	
Two thirds throttle onwards	●				●			●
Acceleration	●				●	●		●
Deceleration on closed throttle	●		●					

● In operation.
★ Depending on how much throttle opening.

At the higher engine outputs, however, the choke tube size needed to obtain the required power is often too large to allow satisfactory tuning of the carburettor for proper part throttle performance.

This difficulty suggests that two carburettors are needed, one tuned to give economy and good part throttle performance when operating alone, and the other tuned so that when operating with the first primary carburettor, the maximum performance is obtained. The Solex B.32 P.A.I.A.S. carburettor does this by combining the advantages of two carburettors in one unit by having two throttle barrels fed from a single float chamber.

This carburettor is known as the Solex Automatic Twin. It has a single float chamber, manually operated choke valve, single accelerator pump and single slow-running system, together with twin choke tubes, twin by-pass (progression) circuits and twin main spraying circuits.

The slow-running circuit operates in the primary throttle barrel and is adjusted in a similar manner to that employed on a single barrel carburettor.

The primary throttle (14) of this carburettor is operated over its whole range of movement by the accelerator pedal. Its secondary throttle is operated automatically. The secondary throttle operating unit (19) consists of a

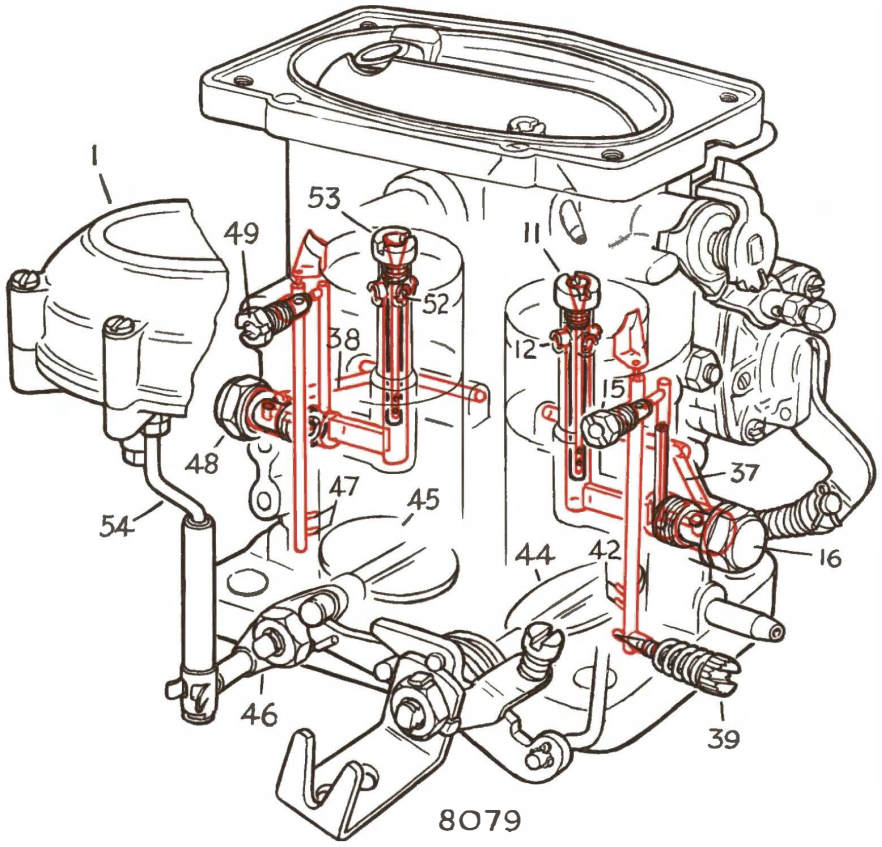

Fig. 2. *Solex B.32 P.A.I.A.S. carburettor — slow running and main spraying passages*

diaphragm, diaphragm return spring, diaphragm cover, and a rod and ball joint connecting the diaphragm to the secondary throttle (16). An internal passage connects the vacuum side of the diaphragm to the cross drillings in the choke tubes.

The secondary throttle is prevented from opening during the first two thirds of the primary throttle opening by the lever (15). After this amount of primary throttle movement, the lever (15) moves clear of the secondary throttle spindle lever, and allows the secondary throttle operating unit (19) to open the secondary throttle. IF THE AIR SPEED THROUGH THE PRIMARY THROTTLE CHOKE TUBE IS HIGH ENOUGH TO CREATE THE NECESSARY SUCTION for atmospheric pressure to lift the diaphragm in the operating unit. The amount of the secondary throttle opening is dependent on the position of the lever (15).

When the primary throttle (14) is closed from fully open to its two thirds position, the lever (15) overrides the action of the secondary throttle operating unit and closes the secondary throttle (16).

The automatic opening and closing of the secondary throttle ensure that it only operates when its action is required.

The secondary throttle is NOT operated by inlet manifold vacuum.

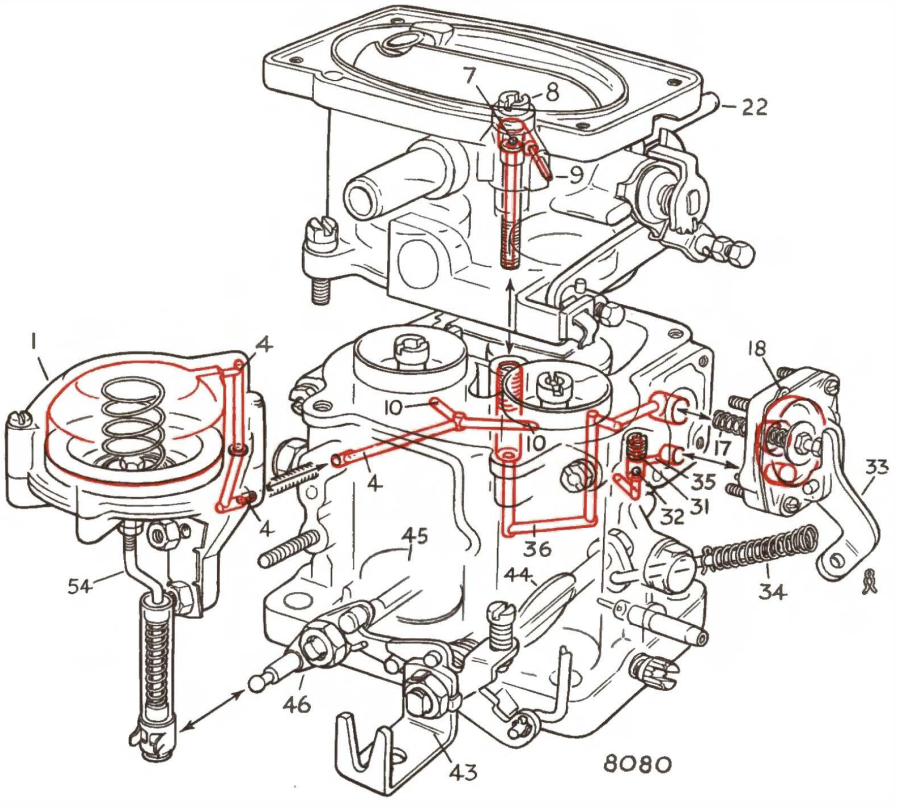

Fig. 3. Solex B.32 P.A.I.A.S. carburettor — accelerator pump and secondary throttle operating unit passage ways

CARBURETTOR OPERATION

All carburettors have to provide a fuel air mixture to meet the following operating conditions.

Cold starting.

Slow running.

Part throttle driving.

Acceleration without hesitation.

Full throttle driving.

These requirements are met by the various parts of this carburettor which are described in the following pages. The various internal jets and drillings are shown in Figs. 2 and 3. Fig. 4 gives a fully annotated schematic sectional view and THESE ANNOTATION NUMBERS ARE USED WHENEVER POSSIBLE in Figs. 3 to 11.

A fully exploded view is given in Fig. 14.

A simple summary of how the carburettor action meets most engine requirements is given on page 25.

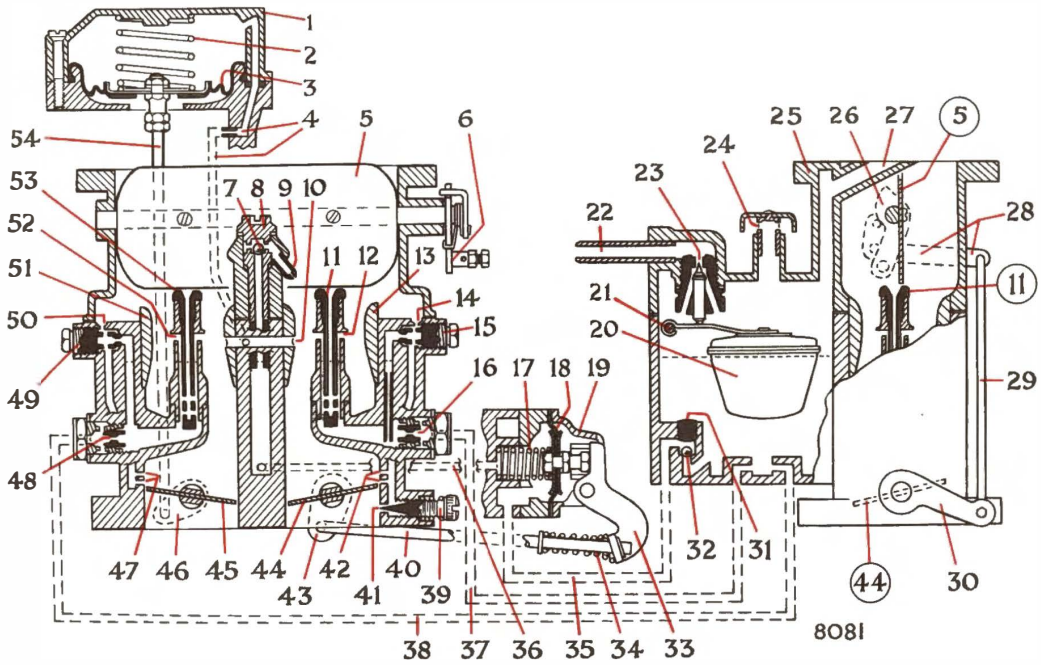

1. SECONDARY THROTTLE OPERATING UNIT HOUSING
2. DIAPHRAGM RETURN SPRING
3. SECONDARY THROTTLE OPERATING DIAPHRAGM
4. DEPRESSION FEED PASSAGE AND PASSAGE RESTRICTOR
5. STRANGLER VALVE
6. STRANGLER VALVE OPERATING LEVER
7. ACCELERATOR PUMP DELIVERY BALL VALVE
8. ACCELERATOR PUMP DELIVERY ASSEMBLY
9. ACCELERATOR PUMP DELIVERY NOZZLE
10. DRILLING IN CHOKE TUBE CONNECTING TO PASSAGE 4
11. PRIMARY THROTTLE BARREL AIR CORRECTION JET AND EMULSION TUBE
12. PRIMARY THROTTLE BARREL MAIN SPRAYING ORIFICES
13. PRIMARY THROTTLE BARREL CHOKE TUBE
14. PRIMARY THROTTLE BARREL PILOT JEY AIR BLEED
15. PRIMARY THROTTLE BARREL PILOT (SLOW RUNNING) JET
16. PRIMARY THROTTLE BARREL MAIN JET
17. ACCELERATOR PUMP DIAPHRAGM RETURN SPRING
18. ACCELERATOR PUMP DIAPHRAGM
19. ACCELERATOR PUMP END COVER
20. FLOAT
21. FLOAT LEVER PIVOT PIN
22. FUEL INTAKE CONNECTION
23. FLOAT NEEDLE VALVE AND SEAT
24. EXTERNAL AIR VENT TO FLOAT CHAMBER
25. CARBURETTOR TOP BODY
26. FAST IDLE LINKAGE OPERATING CAM AND STRANGLER OPERATING LEVER
27. INTERNAL AIR VENT TO FLOAT CHAMBER
28. INTERMEDIATE LEVER—THROTTLE FAST IDLE LINKAGE
29. CONNECTING ROD—THROTTLE FAST IDLE LINKAGE
30. FLOATING LEVER—ON PRIMARY THROTTLE SPINDLE
31. ACCELERATOR PUMP INTAKE VALVE COVER PLUG
32. ACCELERATOR PUMP INTAKE NON-RETURN BALL VALVE
33. ACCELERATOR PUMP OPERATING LEVER
34. ACCELERATOR PUMP OPERATING SPRING
35. FEED PASSAGE TO ACCELERATOR PUMP
36. DELIVERY PASSAGE FROM ACCELERATOR PUMP
37. FEED PASSAGE TO PRIMARY BARREL MAIN JET
38. FEED PASSAGE TO SECONDARY BARREL MAIN JET
39. SLOW RUNNING MIXTURE VOLUME CONTROL SCREW
40. ACCELERATOR PUMP OPERATING ROD
41. SLOW RUNNING OUTLET IN PRIMARY THROTTLE BARREL
42. BY-PASS (PROGRESSION) HOLES IN PRIMARY THROTTLE BARREL
43. PRIMARY THROTTLE OPERATING LEVER
44. PRIMARY THROTTLE
45. SECONDARY THROTTLE
46. SECONDARY THROTTLE OPERATING LEVER
47. SECONDARY THROTTLE BARREL BY-PASS (PROGRESSION) HOLES
48. SECONDARY THROTTLE BARREL MAIN JET
49. SECONDARY THROTTLE BARREL PILOT (PROGRESSION) JET
50. SECONDARY THROTTLE BARREL PILOT JET AIR BLEED
51. SECONDARY THROTTLE BARREL CHOKE TUBE
52. SECONDARY BARREL MAIN SPRAYING ORIFICES
53. SECONDARY THROTTLE BARREL AIR CORRECTION JET AND EMULSION TUBE
54. SECONDARY THROTTLE OPERATING ROD

Fig. 4. *Solex B.32 P.A.I.A.S. carburettor — schematic sectional view*

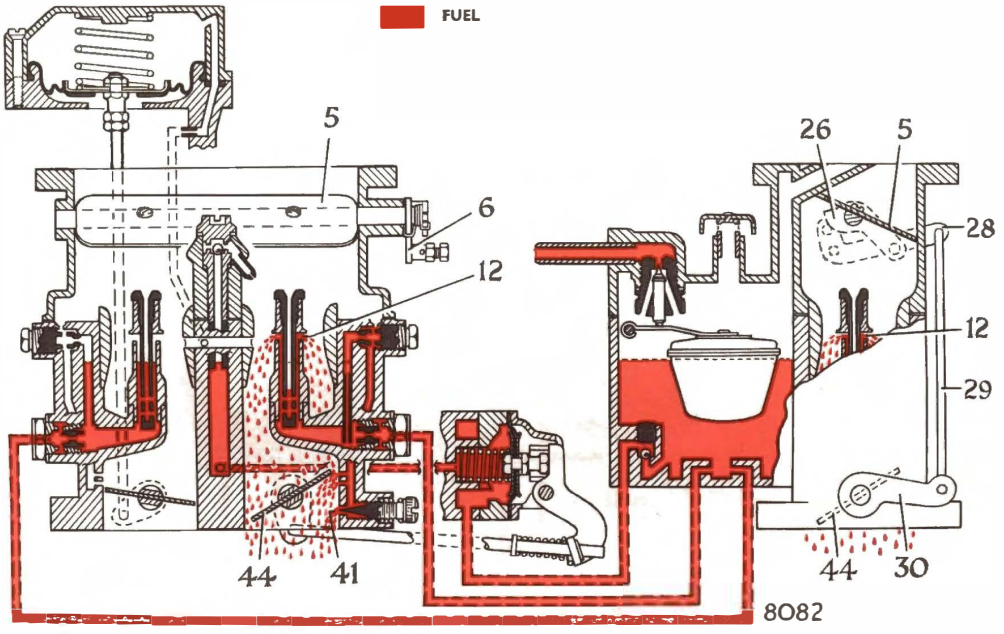

Fig. 5. *Cold starting*

Float chamber — See Fig. 4

Fuel enters the float chamber through the connection (22) in the float chamber cover and passes through the float needle valve (23) into the float chamber. The float needle (23) is operated by the lever attached to the plastic float (20) which rises and closes the float needle valve when the fuel level is correct. This action is entirely automatic and maintains the correct fuel level under all conditions of engine speed and load. The float chamber is vented internally by the short pipe (27) into the carburettor air intake and by an external vent (24) on the top of the float chamber.

Starting from cold — See Figs. 4 and 5

Cold starting conditions require a very rich fuel/air mixture for starting and a progressively weaker mixture until the engine is warm enough to run with the choke (strangler) valve fully open.

These requirements are met by the carburettor action when the choke control is pulled out as far as possible. This closes the choke valve (5), and the cam (26) on the choke valve spindle lever operates a linkage (28), (29) and (30), that opens the PRIMARY throttle (44) to the exact amount needed for cold starting.

Under starting conditions the secondary throttle remains closed. Its movement is prevented by the spring loaded lever (15 — Fig. 1).

As the engine is rotated for starting, with the choke valve (5) closed, the high depression exerted on the PRIMARY main spraying orifices (12) and slow running outlet (41) causes sufficient discharge of fuel for the engine to start.

Directly the engine starts, atmospheric pressure acting on the larger pivoted area of the choke valve causes the choke valve (5) to open a small amount, to allow entry of enough air to keep the engine running. The amount of choke valve opening is controlled by the tension of the choke valve closing spring, which can be adjusted to meet all cold starting conditions, as explained under "ADJUSTMENTS".

As the choke control is pushed back the lever (6) opens the choke valve and allows the throttle to close to its normal slow running position.

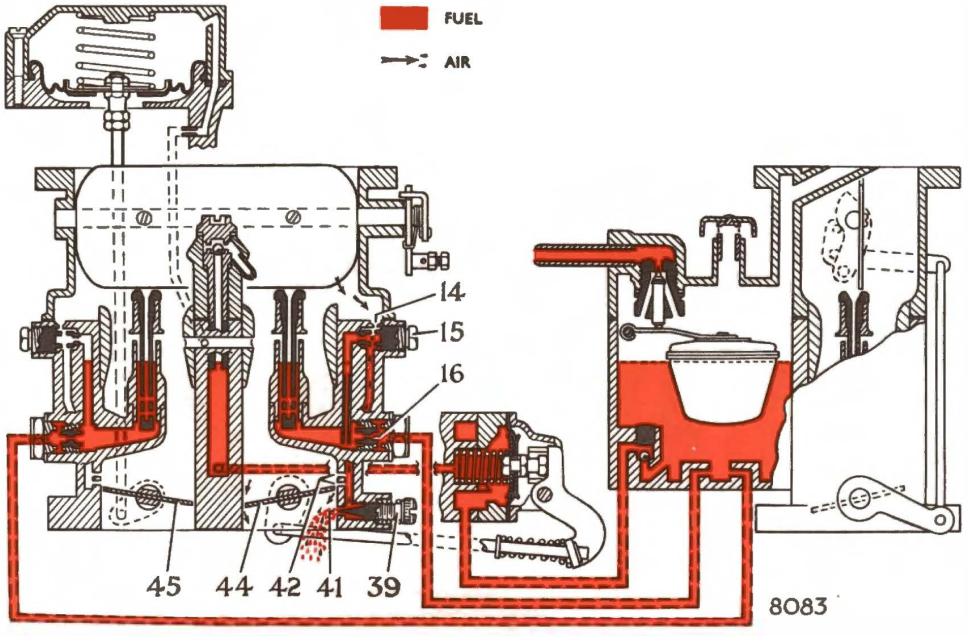

Fig. 6. *Idling operation*

Slow running — See Figs. 2 and 6

When the primary throttle (44) is in the slow running position fuel is metered by the slow running jet (15) which is fed from the float chamber by fuel that passes through the main jet (16) in the primary throttle barrel. Air to emulsify the fuel metered by the slow running jet is drawn through the calibrated air bleed (14). Air is also drawn through the nearly closed primary throttle (44) and by adjusting the slow running volume control screw (39), the amount of emulsified fuel drawn from the slow running outlet (41) can be adjusted so that when mixed with the air passing through the throttle a suitable slow running mixture passes into the inlet manifold.

Further opening of the throttle allows more air to be drawn past the throttle and also uncovers the by-pass orifices (42), sometimes called progression holes, from which additional emulsified fuel is drawn. This maintains the correct mixture strength as the engine speed is increased from slow running to a fast idle speed.

Whenever the engine is idling the secondary throttle (45) is always closed.

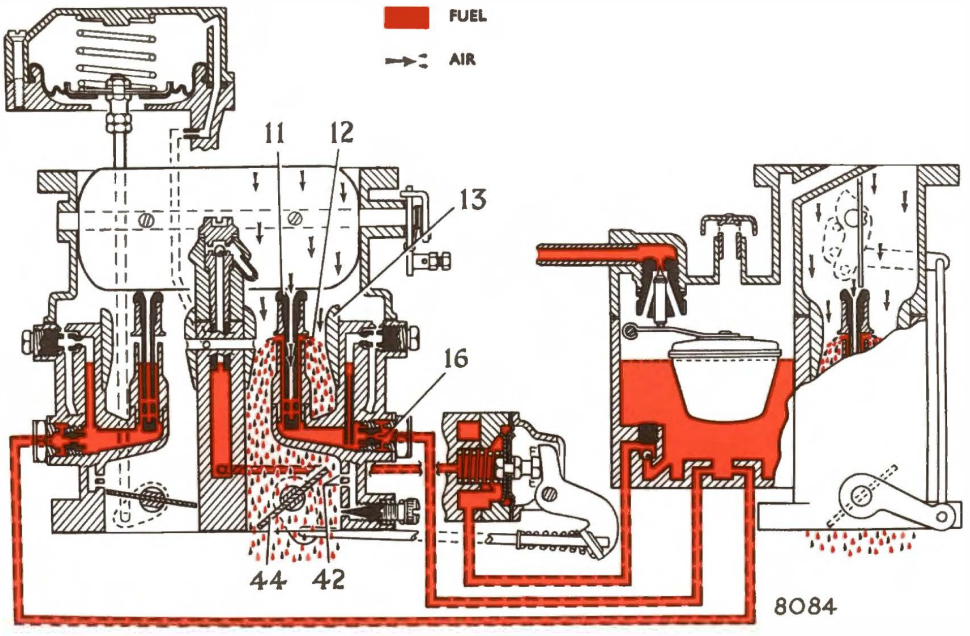

Fig. 7. *Part throttle driving operation*

Normal acceleration to cruising speed —

See Figs. 2 and 7

As the primary throttle (44) is opened past the by-pass orifices (42) the air velocity through the primary choke tube (13) increases. This causes sufficient suction to be exerted on the spraying orifices (12) in the primary barrel, for fuel to be drawn from the emulsion tube well, below the air correction jet (11) and the main jet (16), into the air stream. The amount of fuel, drawn from the emulsion tube well before drawing on the main jet (16), gives the temporary mixture enrichment needed for this condition of operation.

Part throttle driving — See Figs. 2 and 7

This driving condition uses the main jet (16), emulsion tube and air correction jet (11) for supplying the correct amount of fuel to the air stream passing through the primary throttle choke tube (13). If only the main jet was used to control the fuel flow as the throttle was opened, too rich a mixture would be given at wide throttle openings, assuming that the main jet size was correct for a small throttle opening.

As the throttle is opened and air speed through the choke tube (13) in the primary throttle barrel rises, the increased depression acting on the spraying orifice (12) brings the main spraying system into operation. Under this condition fuel flows from the float chamber and is metered by the main jet (16) before passing into the spraying well, below the emulsion tube, where it mixes with air metered by the air correction jet (11); the air entering the fuel stream by means of small holes in the combined emulsion tube and air correction jet (11). From the main well the mixture finally discharges from the spraying orifice (12) into the main air stream. As engine speed increases, the fuel level in the well drops and uncovers the remaining holes in the emulsion tube. In this way additional air enters the fuel stream and corrects the output from the main jet (16) to meet the engine requirements according to speed and load.

During this driving condition, which occurs during the first two thirds of the primary throttle movement, the secondary throttle (45) cannot open because it is held closed by the spring-loaded lever "L" on the primary throttle spindle. See Fig. 10.

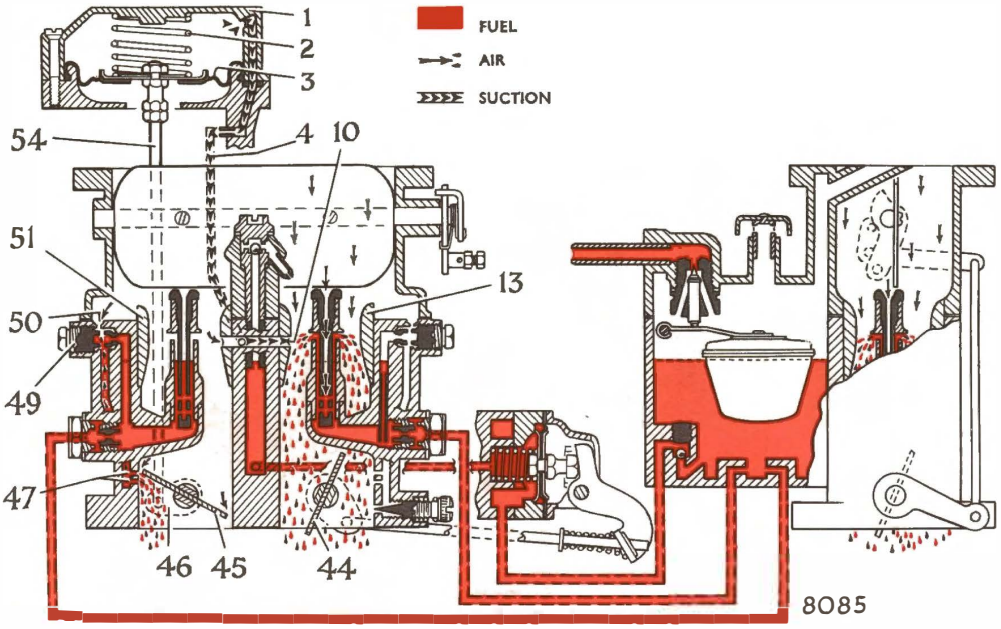

Fig. 8. *Secondary throttle coming into operation*

Wide and full throttle driving — See Figs. 9 and 10

After the primary throttle (44) is two thirds open the primary choke tube (13) and main spraying system can no longer provide sufficient fuel air mixture for further increases of engine speed, and to meet the high speed driving requirements the secondary throttle (45) begins to open. This allows air to pass through the secondary throttle barrel choke tube (51) and for fuel to discharge from first the by-pass orifices (progression holes) (47), and then the main spraying orifices (52) in this throttle barrel. In this way for the last third of the primary throttle movement both throttle barrels can be operated together to provide the correct quantity of fuel/air mixture for higher and maximum speed requirements.

Secondary throttle barrel operation —

See Figs. 8, 9 and 10

The secondary throttle is opened automatically by its operating unit which is shown in sectional form in Figs. 8 and 9. It consists of a diaphragm housing (1), diaphragm (3), diaphragm return spring (2), and rod (54) that connects the diaphragm by a spring-loaded ball joint connection to the lever (46) on the secondary throttle spindle.

The secondary throttle can only open when the following two conditions exist:

1. The primary throttle is open beyond two thirds of its travel.
2. The air speed through the primary choke tube is high enough to create enough suction to allow atmospheric pressure to move the diaphragm (3) in the secondary throttle operating unit.

At low engine speeds, with the engine under load, it is possible for the primary throttle (44) to be fully open and the secondary throttle (45) to remain closed. This is because air speed through the primary choke tube (13) is too low to provide the suction needed in the passage (4) to operate the diaphragm (3).

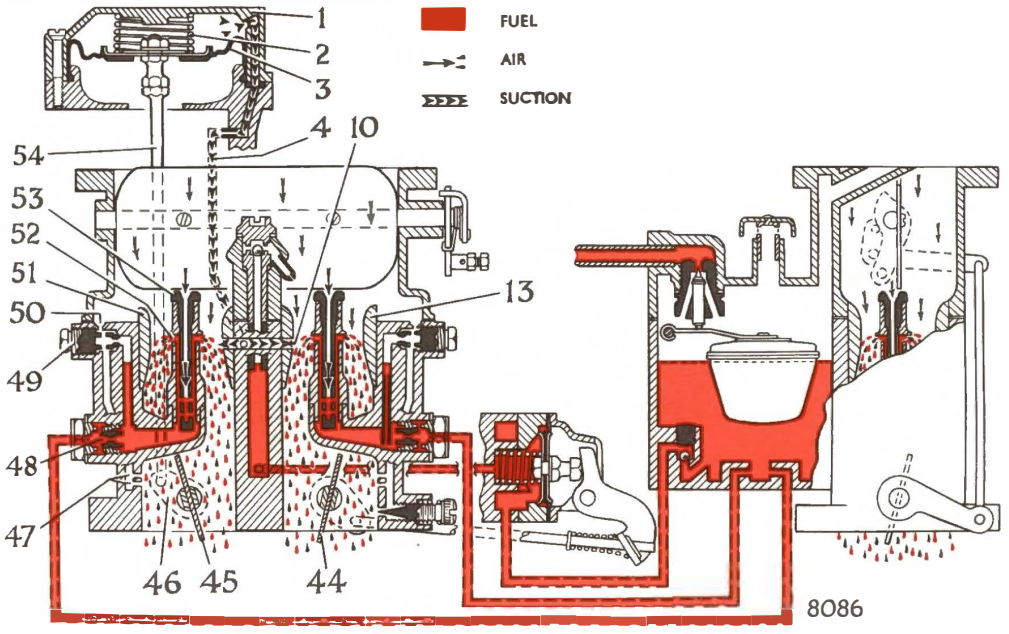

Fig. 9. *Wide throttle driving conditions*

Movement of the diaphragm (3), in the secondary throttle operating unit, takes place when air pressure is reduced on the spring-loaded side of the diaphragm. This occurs when the air flow through the primary choke tube (13) is high enough to create the necessary suction at the cross drilling (10) which connects to the passage (4). The secondary throttle (45) then opens, the amount being dependent on the position of the lever "L" shown in Figs. 10 and (15) in Fig. 1.

When the secondary throttle (45) is open wide enough, air flow through the secondary throttle choke tube (51) increases the suction at the cross drilling (10). This provides the increased suction needed to move the diaphragm (3) against the force of its return spring (2) which becomes greater as the secondary throttle opens.

The secondary throttle barrel has its own choke tube (51) air correction jet and emulsion tube (53), pilot jet (49) and pilot jet air bleed (50) that feeds the by-pass orifice. It has no slow-running outlet orifice. These parts function in a similar manner to those in the primary throttle barrel. The secondary by-pass system is necessary to ensure that fuel is fed into the secondary air stream directly the secondary throttle is open, and to prevent air only passing through the secondary throttle before the secondary main spraying circuit comes into operation.

When the accelerator pedal is released from its full or above two thirds travel position, the secondary throttle, if open, is progressively closed by the heavily spring-loaded lever "L" on the primary throttle spindle, and is fully closed against its adjustable stop when the primary throttle is closed to its two thirds open position or beyond.

Fig. 10 shows various conditions of the primary and secondary throttle openings.

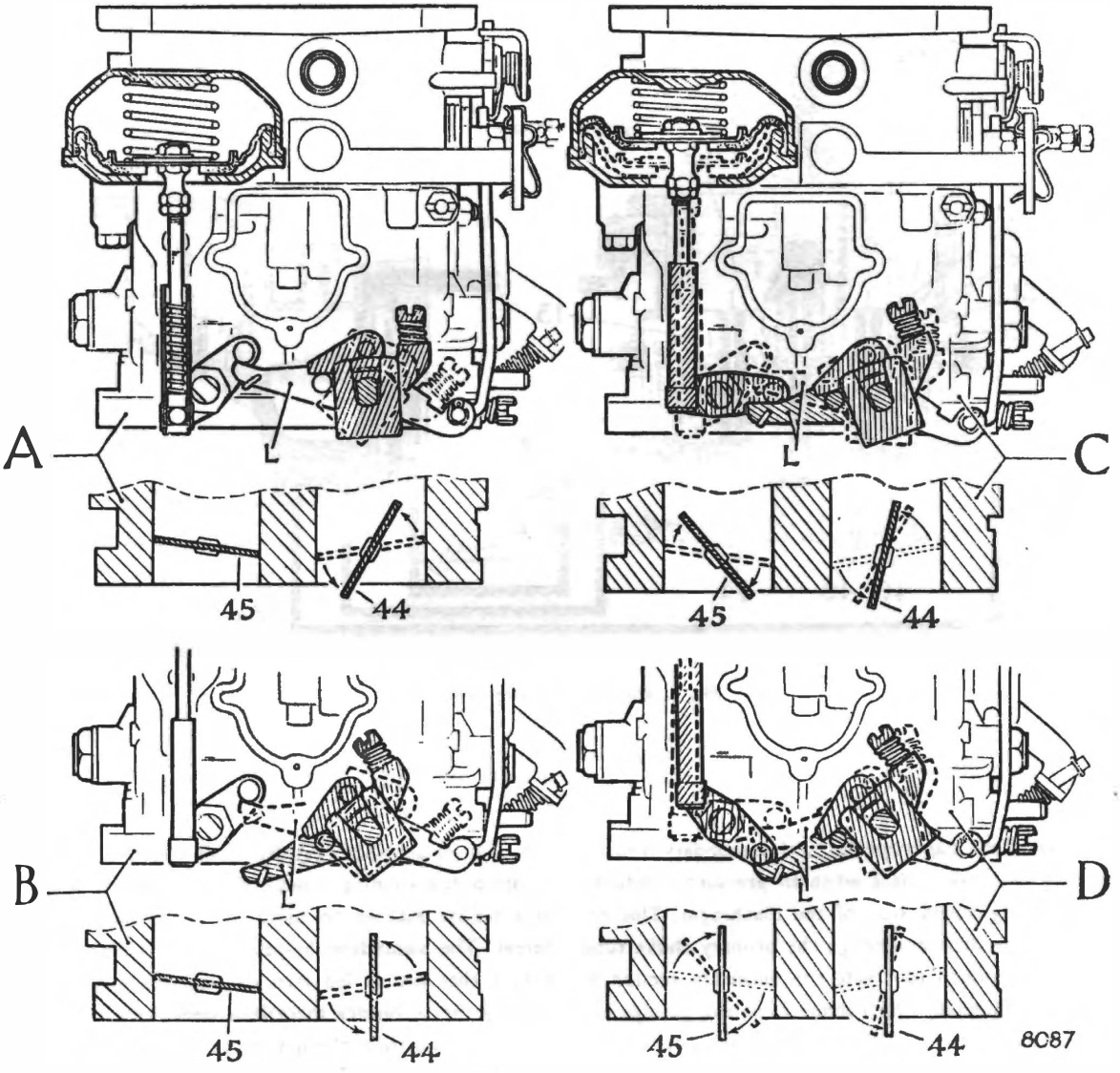

A. Primary throttle (44) movement during which secondary throttle is (45) always closed.

B. Primary throttle (44) operating range, when engine speed is too low to provide the necessary suction in the primary throttle choke tube, to actuate the secondary throttle operating unit.

C. & D. Primary throttle (44) movement needed when sufficient suction exists in the primary choke tube to open the secondary (45) throttle. (C) half-way; (D) fully open.

Fig. 10. *Primary and secondary throttle operation*

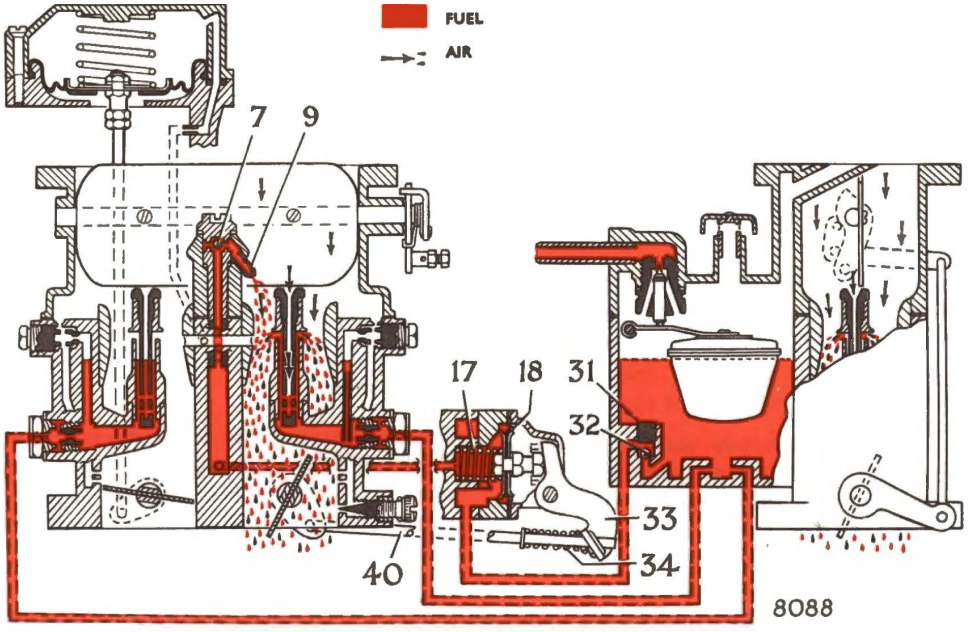

Fig. 11. *Acceleration — accelerator pump in operation*

Acceleration and the accelerator pump —

See Figs. 3 and 11

To ensure immediate engine response, when the primary throttle is suddenly opened, a temporary metered supply of extra fuel is needed. This fuel is provided by a mechanically operated diaphragm type accelerator pump connected to a short lever on the primary throttle spindle.

When the accelerator pedal is released the pump diaphragm return spring (17) forces the diaphragm (18) outwards which draws fuel into the accelerator pump through its non-return valve (32).

When the accelerator pedal is depressed the primary throttle (44) opens and the spring (34) is compressed on the connecting rod (40). This pushes the pump lever (33) which compresses the diaphragm (18) and causes fuel to be discharged from the jet (9) into the primary choke tube after lifting the non-return delivery ball valve (7). The accelerator pump non-return valve (32) inside the float chamber is situated below the plug (31).

STARTING THE ENGINE

From cold

When starting the engine from cold, the choke control is pulled fully out, the ignition switched on and the starter operated WITHOUT MOVING THE ACCELERATOR PEDAL. When the engine starts the control is pushed back to a suitable fast idle position for driving away. The control should be pushed fully in directly the engine will run without hesitation.

From extreme cold (below 10°C, 14°F)

When starting under extremely cold conditions FIRST — FULLY DEPRESS THE ACCELERATOR PEDAL THREE TIMES. Then follow the procedure previously given for starting from cold.

Partly warm

Very slightly depress the accelerator pedal, switch on the ignition, and operate the starter. In most cases the engine will start immediately and idle properly directly the accelerator pedal is released.

If the engine will not start in this way the choke control should be pulled out half way, the ignition switched on, and the starter operated without moving the accelerator pedal. After the engine starts the choke control should be pushed in as soon as the engine will run without the choke.

When hot

The choke control should never be used when the engine is hot.

If difficult starting occurs the accelerator pedal should be fully and slowly depressed and the starter operated with the ignition switched on. The engine will then start easily and the accelerator pedal should be released directly starting occurs to prevent racing of the engine.

The accelerator pedal must not be pumped, or agitated, as this will cause the accelerator pump to inject an excessive quantity of fuel into the inlet manifold. This fuel will vaporise and produce an excessively rich mixture that will prevent the engine from starting.

DIAGNOSIS OF FAULTS

Since the function of the carburettor is closely connected with other items of engine operation, troubles are sometimes difficult to trace and the carburettor is often blamed when it is not at fault.

Unless known to be in perfect condition, the following items should be checked before making carburettor adjustments:

Ignition system

1. Check spark plug condition. Clean and set gaps.
2. Check condition and tightness of H.T. and L.T. leads.
3. Check condition and setting of contact breaker points and contact moving point spring tension.
4. Ensure that the centrifugal and vacuum advance mechanism is working correctly.
5. Check ignition timing. Only small variations from the correct static timing are permissible.

Fuel system

1. Ensure that an adequate supply of fuel is being delivered to the float chamber.
2. Check that fuel pump output pressure is correct to the figures given in the General Data Section of this manual.
3. Examine induction manifold and carburettor flange for air leaks.
4. Ensure that air cleaner is fitted correctly and not restricting air supply to carburettor.
5. Check that water is flowing through the inlet manifold jacket.

Compression

1. Check valve clearances and compressions.
2. Make sure valves are not sticking.

Exhaust system

1. Check that exhaust pipe has not become damaged or blocked.

If the carburettor has been proved faulty a systematic check should be carried out in order to locate the exact source of the trouble. Random adjustment on the carburettor is useless and harmful and must never be attempted. Figs. 2, 3 and 4 show the locations of jets and passage ways.

Excessive fuel consumption — See Fig. 4

Causes

1. Difficult operating conditions such as town driving or very hilly country.
2. Leakage in the fuel system.
3. Partial flooding.
4. Incorrect jets fitted.
5. Choke operating cable incorrectly adjusted.

Rectification

1. Ensure that engine is correctly tuned. Carry out fuel consumption test over known test route to check consumption under normal driving conditions.
2. Check fuel system for leakage starting at the fuel tank, checking all unions, fuel lines, and every possible place at which fuel can leak.
3. Ensure that float needle and seat assembly (23) is properly tightened in carburettor top body and that the single joint washer under the seating is in position and not damaged.
   Renew float needle/seat assembly and float if these items are in any way suspect.
4. Ensure that the correct sizes of air correction jets emulsion tubes and main jets are fitted. The sizes for these are given under "Fuel System" in the Data Section. Check that the main jets are tight in their holders and are in their respective throttle barrels.

5. Check that the choke operating cable is correctly adjusted so that the operating lever (6) is against its back stop, when the choke control is $\frac{1}{16}$ in. (1·5 mm.) from the full-in position.

Insufficient top speed — See Fig. 4

Causes

1. Primary throttle (44) not opening fully. This will also prevent full opening of the secondary throttle.
2. Secondary throttle spindle sticking preventing normal automatic opening.
3. Secondary throttle (45) sticking closed due to incorrect adjustment of its closed position stop screw.
4. Secondary throttle operating unit not opening secondary throttle correctly.
5. Secondary barrel main jet (48) blocked.
6. Main jet sizes incorrect.

Rectification

1. Check that the primary throttle (44) is opened fully when the accelerator pedal is pressed down on to the FLOOR COVERINGS.
2. Hold the primary throttle (44) fully open. Disconnect the ball joint on the end of the rod (54) from the secondary throttle arm (46) and check that the secondary throttle (45) is perfectly free to open and close against its stop. Close the secondary throttle firmly against its closed position with finger and thumb pressure and check that it is not sticking in its closed position when the carburettor is COLD and again when it is HOT.
   Reconnect the ball joint and check that the operating unit diaphragm can lift the secondary throttle fully open. This is done by lifting the diaphragm on its connecting rod (54) just below the locknut above the ball joint with a small pair of pliers.
3. Adjust the secondary throttle stop screw as explained under "ADJUSTMENT — Secondary throttle stop".
4. High speed is dependent upon the correct operating of the secondary throttle (45), after the primary throttle lever allows it to open and if its operating unit is defective the secondary throttle will not open properly. For this unit to operate correctly there must be:
   (*a*) An air-tight diaphragm (3).
   (*b*) An air-tight joint between the operating unit operating unit and the carburettor body. A suitable joint is used between these two faces.
   (*c*) Clear passage ways (10) and (4) between the choke tube and the diaphragm upper face. A small brass dowel with a small restriction drilling is used between the unit face and carburettor body. This must be clear.

The secondary operating unit can be tested, after removing it from the carburettor, by holding a suitable piece of rubber tube over its brass locating dowel and sucking air through the tube by holding the other end of the tube in the mouth. This suction should move the diaphragm over the whole of its operating range. After this the unit should be immersed in water, so that it is just covered, and the diaphragm depressed by finger and thumb pressure while the other first finger blocks off the brass dowel inlet hole. If the diaphragm is faulty air bubbles will be seen.

5 & 6. Check that both main jets (16) and (48) are clear and are the correct size given in the Data Section under "Fuel System".

Faulty slow-running — See Fig. 4

Causes

1. Slow-running adjustment incorrectly set.
2. Slow-running pilot jet (15) blocked.
3. Slow-running passage way partly blocked.
4. Incorrect operation of crankcase ventilation regulator fitted in the inlet manifold (if fitted). See section B index.
5. Air leak at carburettor flange joint or on induction manifold to cylinder head joint.
6. Secondary throttle closed stop incorrectly set. This allows too much air to pass by the closed secondary throttle when the engine is idling.

Rectification

1. Adjust the slow-running as described under "ADJUSTMENTS".
2. Remove slow-running (pilot) jet (15) and blow through its metering orifice, with clean compressed air as it is not possible to see through the actual orifice.

3. Remove slow-running volume control screw (39) and slow-running jet (15). Blow through slow-running system passage ways and replace jet and screw. The latter should be screwed on to its seat by finger pressure only and turned back one complete turn before running the engine to adjust the slow running.
4. Remove crankcase ventilation regulator from the inlet manifold. Dismantle clean and check as described in Section B.
5. Remove carburettor and induction manifold. Check flange for distortion and carefully reface if necessary. Refit with new joints.
6. Adjust secondary throttle stops as describe under "ADJUSTMENTS".

Flat spot at small primary throttle opening — See Fig. 4

Causes

1. Slow-running adjustment set too weak.
2. By-pass (progression) holes (42) obstructed in the primary throttle barrel.
3. Secondary throttle closed stop incorrectly set.

Rectification

1. Adjust the slow running to give reliable idling just off of the rich or "hunting" conditions.
2. If the flat spot still exists blow through the by-pass (progression) holes (42) in the primary throttle barrel with compressed air. This can be done with the carburettor in position by removing the slow running jet (15) and lightly screwing the volume control screw (39) on to its seal. The compressed air supply is then applied at the slow-running jet location. Re-adjust volume control screw (39).
3. Adjust the secondary throttle closed position stop as described under "ADJUSTMENTS".

Flat spot at wide primary throttle opening — See Fig. 4

Causes

1. Secondary throttle stiff in action.
2. By-pass (progression) holes (47) in the secondary throttle barrel partly or fully blocked.
3. Secondary throttle operating unit defective.

Rectification

1. Check that the secondary throttle (45) is perfectly free to operate over its whole range, particularly from its closed position.
2. Blow through the by-pass orifices (progression) holes (47) in the secondary throttle barrel. This can be done by applying compressed air at the secondary barrel pilot jet (49) position after removing the jet.
3. Check action of the secondary throttle operating unit as described under "Insufficient top speed".

Poor acceleration — See Figs. 3 and 4

Causes

Faulty operation of the accelerator pump which prevents the temporary enrichment of the mixture needed when the primary throttle is suddenly opened.

Rectification

1. Check that the small circlips, on the accelerator pump push rod (40) are in place. If the circlip behind the spring (34) is missing the accelerator pump actuating lever (33) will not operate correctly when the primary throttle (44) is opened.
2. Check through the whole of the accelerator pump circuit in the following order.

   Remove carburettor top body and float. This requires the removal of the combined screw (8) and discharge ball valve.

   Remove the blank plug (31) and ball valve (32) below plug in float chamber.

   Remove the four corner flat headed brass screws holding the accelerator pump to the carburettor body, and the circlip in the outer end of the accelerator pump operating rod (40). Lift off pump assembly from carburettor body.

   Remove the two brass screws holding the accelerator pump end cover (19) to its body. Remove cover and inspect diaphragm (18) and renew if faulty.

   Blow through passages (35) and (36) with compressed air. These passages feed and discharge fuel to and from the accelerator pump chamber. They are shown in Figs. 3 and 4.

   Replace intake ball valve (32) and plug (31).

   Reassemble accelerator pump. When refitting the diaphragm (18) it should be pushed against its back stop on its operating lever side, before tightening the two screws that hold the pump cover plate (19) to the accelerator pump body. This ensures that the diaphragm can move over its whole range and pump effectively.

Difficult starting from cold — See Figs. 4 and 5

Causes

1. Incorrect use of choke control.
2. Choke control lever (6) not moved to the full extent of its travel when the choke control is pulled out fully.
3. Choke valve spindle sticking in its bearings and preventing full closing of the choke valve (5), when the lever (6) is moved over to the full extent of its travel. This can be checked by observing the position of the bent over lever on the end of the choke spindle. The bent lever should always follow the lever (6) when the choke control is pulled out.
4. Primary throttle not opening to the correct cold starting fast idle position, when the choke control is pulled out fully. If this occurs the engine cannot run at the proper cold fast idling speed after starting.
5. Choke valve return spring tension incorrectly adjusted.

Rectification

1. See under "STARTING THE ENGINE".
2. Adjust choke control cable. See under "ADJUSTMENT".
3. Remove air cleaner and pull choke control out fully. With a thin oil lubricate the choke valve spindle at its two ends, until the choke valve will snap shut.
4. Adjust the primary throttle fast idle position — See under "ADJUSTMENTS".
5. Adjust the choke valve return spring as described under "ADJUSTMENTS".

ADJUSTMENTS

The only adjustments are:

1. Slow running mixture and slow running speed.
2. Choke control cable.
3. Secondary throttle closed position stop.
4. Secondary throttle operating rod.
5. Primary throttle fast idle setting.
6. Choke valve return spring tension.
7. Primary full throttle position and accelerator pedal position.

Slow-running — to adjust — See Fig. 13

Adjust the slow-running speed adjustment screw (8) to the engine idling speed given in the Data Section under "Fuel System".

Adjust the slow-running volume control screw (7) so that the engine is running evenly with the screw rotated clockwise as far as possible.

The slow running mixture volume control screw is quite sensitive to adjust because it regulates the amount of fuel used for slow running. It does NOT control the air feed for slow running.

Re-adjust the engine speed if necessary with the slow-running speed adjustment screw (8).

When this adjustment is finished the engine should be running evenly at the idling speed given under "Fuel System" in the Data Section.

Any "hesitancy" or "flat spot", as the throttle is moved from the idling position, when starting from rest, driving slowly or accelerating, is sometimes an indication that the slow running mixture is either too weak or too rich, and that further slight adjustment is needed.

Choke control cable

Release the set screw holding choke control inner cable end, at the lever.

Push the outer cable into its fixing abutment as far as possible and tighten its securing set screw.

Push the choke valve operating lever over against its operating stop farthest from its outer cable fixing.

Position the choke control so that its knob is $\frac{1}{8}$ in. (3 mm.) from its full-in position, and tighten set screw securing inner cable at lever end.

Pull choke control outward as far as possible and check that the choke valve operating lever comes against the other stop nearest to the outer cable fixing position.

Push choke control fully inwards and check that the choke valve operating lever comes against its stop farthest from its outer cable fixing.

Secondary throttle stop — See Figs. 4 and 12

This is a very important adjustment. It prevents the secondary throttle barrel jet system from supplying fuel when the primary throttle barrel only is needed. It also ensures that the secondary throttle cannot stick closed. The adjustment needed cannot be made with the carburettor in position because it is necessary to measure the clearance between the secondary throttle and its throttle bore.

1. Remove the carburettor, clean its exterior and carefully scrape away any varnish deposits in both throttle bores.

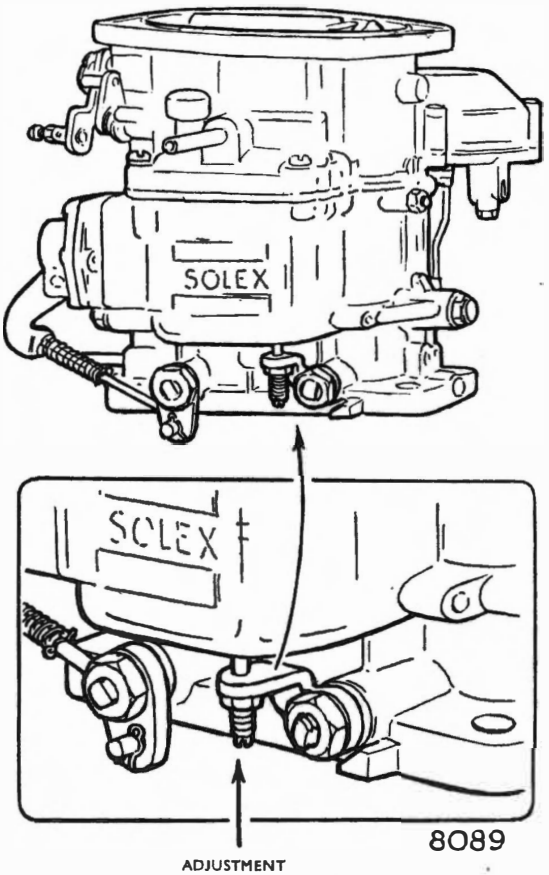

Fig. 12. *Secondary throttle closed position stop*

2. Release the spring-loaded ball joint to disconnect the shaft (54) from the secondary throttle ball joint on the secondary throttle spindle lever (46).
3. Hold the primary throttle (44) in its fully open position by inserting a short length of $\frac{1}{2}$ in. (12 mm.) diameter bar between the open primary throttle and its throttle bore.
4. Adjust the secondary throttle stop shown in Fig. 12 so that secondary throttle has ·002 in. (·05 mm.) clearance between the throttle plate (45) and its throttle bore, at EACH SIDE of its diameter at right angles to the throttle spindle.
   A ·002 in. (·05 mm.) feeler, $\frac{3}{16}$ in. (5 mm.) wide should be used for checking the throttle plate clearance.
   If the clearances are uneven the throttle plate fixing screws should be loosened off so that the throttle plate centralises as its clearance is checked. Re-tighten the fixing screws when similar clearances are obtained.
5. Refit the carburettor and adjust the slow-running as described under "ADJUSTMENTS".

Secondary throttle operating rod — See Fig. 4

This rod (54) is adjusted in its diaphragm end so that its ball joint end lines up with the ball on the secondary throttle lever (46), when the secondary throttle (45) is closed and the diaphragm (3) is at the bottom of its stroke.

Primary throttle fast idling position — for cold starting — See Fig. 13

This adjustment can be made by one of the two following methods. The second method, which requires the removal of the carburettor should always be used when making this adjustment for extreme cold starting conditions.

Method 1 — Without removing carburettor — See Fig. 13

1. Release the set screw (5) holding the connecting rod in the trunnion on the outer end of the lever (4).
2. Unscrew the slow running speed adjustment screw (8) until its end is clear of the boss on the carburettor body. Then, holding the throttle closed very firmly, screw down the slow running speed adjustment screw (8) until it just contacts the boss on the carburettor body, and from this position screw it down a further $4\frac{1}{2}$ turns. This opens the throttle to the correct position for cold starting.
3. Pull the choke control out fully and check that the lever arm (3) is against its back stop.
4. Lift the connecting rod (6) lightly so that the floating arm (9), at its lower end, just contacts the underside of the throttle lever extension which carries the slow running speed adjustment screw (8). Then tighten the set screw (5). This ensures that the primary throttle is opened to the correct position when the choke control is pulled out fully.
5. Return the choke control to its fully back position.
6. Adjust the slow running speed adjustment screw (8) to give the correct idling speed.

Method 2 — With carburettor removed from engine — See Fig. 13

1. Remove the carburettor from the engine.
2. Obtain a gauge to the dimension given as Fast Idle Gap under Fuel System in the Data Section for insertion between the throttle butterfly and throttle barrel. This can be the shank of a drill or a wire of this diameter or wire flattened to this dimension.

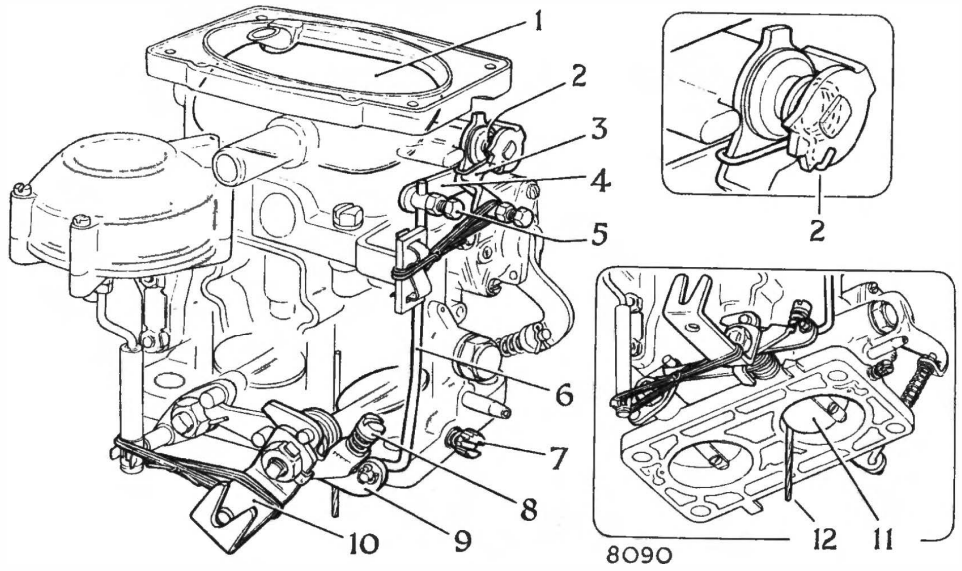

1. CHOKE VALVE
2. CHOKE VALVE CLOSING SPRING
3. CHOKE VALVE CONTROL LEVER
4. INTERMEDIATE LEVER
5. FAST IDLE SPEED ADJUSTMENT SET SCREW
6. CONNECTING ROD
7. SLOW RUNNING MIXTURE VOLUME CONTROL SCREW
8. SLOW RUNNING SPEED ADJUSTMENT SCREW
9. FLOATING LEVER
10. PRIMARY THROTTLE OPERATING LEVER
11. PRIMARY THROTTLE
12. CHECKING GAUGE

Fig. 13. *Primary throttle fast idle adjustment and strangler valve return spring adjustment*

3. Move the choke lever (3) to the full extent of its travel and tie it in this position, so that the lever cannot move away from its forward stop.
4. Release the setscrew (5) on the trunnion on the upper end of the connecting rod (6).
5. Insert the checking gauge (12) between the primary throttle (11) edge and throttle bore at a right angle to the centre of the throttle spindle, and tie the throttle shaft extension back so that the throttle holds the gauge against the throttle bore.
6. Lift the connecting rod (6) lightly so that the floating lever (9), at its lower end, just contacts the underside of the throttle lever extension. Then tighten the set screw (5).
7. Release the means used to secure the throttle and choke lever and move the choke lever (3) over its whole range of movement. Then check that the primary throttle opens to the amount of the gauge dimension.
8. Refit the carburettor and adjust the choke cable.

Choke valve return spring tension — See Fig. 13

For most cold starting conditions the looped end of the choke valve return spring (2) should be in the vee notch that gives the lightest opening movement of the choke valve as shown in Fig. 13. At very low temperatures the spring tension may need increasing by moving the looped end into one of the other two positions, so that the choke valve opening tension is increased.

Primary full throttle position and accelerator pedal position

An adjustment for setting the accelerator pedal position is provided at the end of the throttle operating shaft.

This adjustment should be set so that the primary throttle is fully open when the accelerator pedal is 1 in. (25 mm.) from the floor covering.

IF THE PRIMARY THROTTLE CANNOT OPEN FULLY IT PREVENTS FULL OPENING OF THE SECONDARY THROTTLE.

CLEANING — See Fig. 4

The jets, passage ways and float chamber can be cleaned without removing the carburettor if the following procedure is used.

1. Remove the air cleaner.
2. Remove the small outer split pin at the lower end of the connecting rod (29) and move the rod end out of the floating lever (30), DO NOT LOOSEN the set screw of the trunnion at the upper end of the rod.

continued on page 44

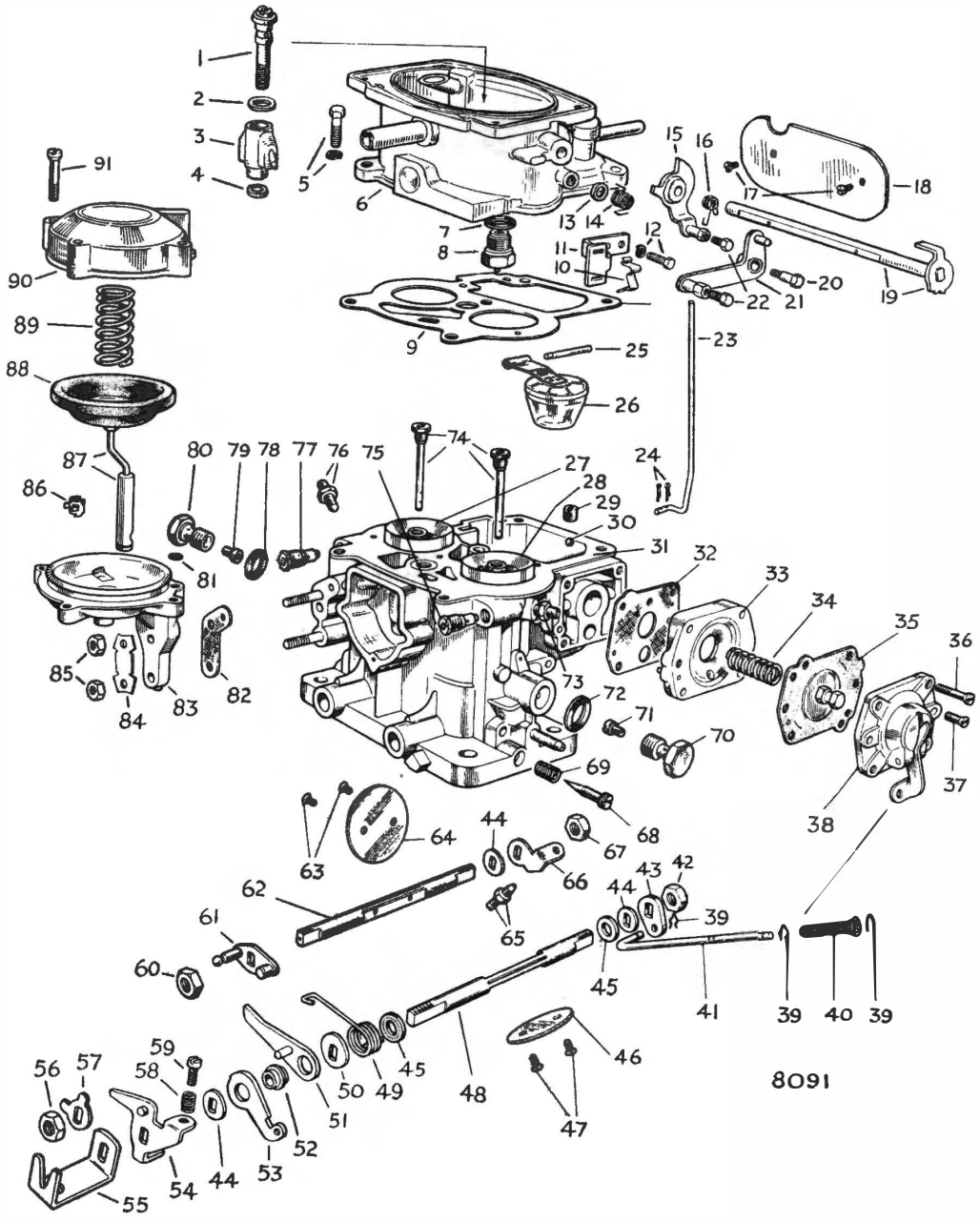

Fig. 14. *Solex B.32 P.A.I.A.S. carburettor — exploded view*

CARBURETTOR PARTS

—See Fig. 14.

1. ACCELERATOR PUMP INJECTOR FEED TUBE
2. WASHER
3. ACCELERATOR PUMP INJECTOR
4. WASHER
5. CARBURETTOR TOP BODY FIXING SCREW AND WASHER—FOUR USED
6. CARBURETTOR TOP BODY
7. WASHER FOR NEEDLE VALVE SEATING
8. FLOAT NEEDLE VALVE AND SEATING
9. GASKET
10. CHOKE CABLE FIXING AND ABUTMENT CLIP
11. CHOKE CABLE MOUNTING BRACKET
12. BRACKET FIXING SCREW AND WASHER
13. SPACING WASHER
14. RETURN SPRING—CHOKE OPERATING LEVER
15. CHOKE OPERATING LEVER
16. CHOKE VALVE CLOSING SPRING
17. CHOKE VALVE FIXING SCREWS
18. CHOKE VALVE
19. CHOKE VALVE SPINDLE
20. SHOULDERED PIVOT BOLT—INTERMEDIATE LEVER
21. INTERMEDIATE LEVER
22. SET SCREWS—CHOKE INNER CABLE AND CONNECTING ROD
23. CONNECTING ROD
24. SPLIT PINS
25. FLOAT PIVOT PIN
26. FLOAT
27. CHOKE TUBE SECONDARY THROTTLE BARREL
28. CHOKE TUBE PRIMARY THROTTLE BARREL
29. ACCELERATOR PUMP BALL VALVE COVER PLUG
30. ACCELERATOR PUMP INTAKE BALL VALVE
31. CARBURETTOR MAIN BODY
32. JOINT—ACCELERATOR PUMP TO MAIN BODY
33. ACCELERATOR PUMP BODY
34. ACCELERATOR PUMP DIAPHRAGM RETURN SPRING
35. ACCELERATOR PUMP DIAPHRAGM
36. ACCELERATOR PUMP FIXING SCREW—FOUR USED
37. ACCELERATOR PUMP COVER FIXING SCREW—TWO USED
38. ACCELERATOR PUMP COVER AND LEVER ASSEMBLY
39. CIRCLIPS
40. ACCELERATOR PUMP LEVER OPERATING SPRING
41. ACCELERATOR PUMP OPERATING ROD
42. LEVER RETAINING NUT
43. ACCELERATOR PUMP OPERATING LEVER
44. SPACING WASHER
45. NYLON SEALING WASHER
46. PRIMARY THROTTLE
47. PRIMARY THROTTLE FIXING SCREWS
48. PRIMARY THROTTLE SPINDLE
49. RETURN SPRING—SECONDARY THROTTLE RETURN LEVER
50. WASHER
51. LEVER SECONDARY THROTTLE RELEASE AND RETURN
52. BEARING FOR LEVERS 51 AND 53
53. FLOATING LEVER—PRIMARY THROTTLE FAST IDLE LINKAGE
54. PRIMARY THROTTLE ABUTMENT PLATE
55. PRIMARY THROTTLE OPERATING LEVER
56. NUT — PRIMARY THROTTLE LEVER
57. LOCK WASHER
58. SLOW RUNNING SPEED ADJUSTMENT SCREW SPRING
59. SLOW RUNNING SPEED ADJUSTMENT SCREW
60. NUT—SECONDARY THROTTLE OPERATING LEVER
61. SECONDARY THROTTLE OPERATING LEVER
62. SECONDARY THROTTLE SPINDLE
63. SECONDARY THROTTLE FIXING SCREWS
64. SECONDARY THROTTLE
65. SECONDARY THROTTLE CLOSED POSITION STOP SCREW AND LOCK NUT
66. SECONDARY THROTTLE STOP PLATE
67. STOP PLATE FIXING NUT
68. SLOW RUNNING MIXTURE VOLUME CONTROL SCREW
69. VOLUME CONTROL SCREW SPRING
70. MAIN JET HOLDER
71. MAIN JET — PRIMARY THROTTLE BARREL
72. WASHER — MAIN JET HOLDER
73. SET SCREW AND LOCK NUT HOLDING PRIMARY THROTTLE BARREL CHOKE TUBE
74. AIR CORRECTION JETS AND EMULSION TUBES, PRIMARY AND SECONDARY THROTTLE BARRELS
75. SLOW RUNNING JET—PRIMARY THROTTLE BARREL
76. SET SCREW AND LOCK NUT HOLDING SECONDARY THROTTLE BARREL CHOKE TUBE
77. PROGRESSION JET—SECONDARY THROTTLE BARREL
78. WASHER — MAIN JET HOLDER
79. MAIN JET—SECONDARY THROTTLE BARREL
80. MAIN JET HOLDER
81. SMALL RUBBER SEALING RING
82. JOINT—SECONDARY THROTTLE OPERATING UNIT TO CARBURETTOR MAIN BODY
83. SECONDARY THROTTLE OPERATING UNIT BODY
84. LOCKING PLATE
85. SECONDARY THROTTLE OPERATING UNIT HOLDING NUTS
86. BALL JOINT FIXING CLIP
87. CONNECTING ROD AND SPRING LOADED BALL JOINT
88. SECONDARY THROTTLE OPERATING DIAPHRAGM
89. DIAPHRAGM RETURN SPRING
90. SECONDARY OPERATING UNIT COVER
91. COVER FIXING SCREW — FOUR USED

3. Remove the carburettor top body and lift out float (20) and float lever pivot shaft (21).
4. Remove primary air correction jet (11) primary main jet (16) holder and primary slow running (pilot) jet (15) from the primary throttle barrel. This will drain off some of the fuel in the float chamber. The remaining fuel can be soaked away with clean lintless rag after which the float chamber should be blown out with clean compressed air.
5. If water is present in the float chamber the accelerator pump should be drained by almost removing the four long brass screws at each corner of the accelerator pump, and drawing the fuel pump assembly, away from the float chamber. This allows the pump compartment to drain. Retighten the four pump securing screws. Water in the float chamber can be an indication that the entire fuel system needs draining and cleaning of water.
6. With a suitable air nozzle blow compressed air into the slow running jet, main jet and air correction jet positions. After this blow through air correction jet (11), slow running jet (15) and main jet (16). Refit all jets.
7. Repeat this procedure in the secondary throttle barrel.
8. Remove the accelerator pump intake valve cover plug (31) in the float chamber and feed tube assembly (8). Hold a finger lightly over this hole to prevent loss of the non-return ball valve (32) and blow compressed air down the accelerator pump delivery assembly hole.
9. Blow through the fuel intake pipe (22).
10. Reassemble carburettor and prime float chamber by operating the engine starter or fuel pump primary lever (if fitted). Open the primary throttle and check that fuel is discharged from the accelerator pump delivery nozzle (9).
11. Refit air cleaner.

TO REMOVE

1. Remove air cleaner top body.
2. Disconnect fuel pipe from its connection on the float chamber.
3. Remove vacuum advance pipe and crankcase ventilation pipe from their connections on the carburettor.
4. Disconnect choke control operating inner and outer operating cable.
5. Disconnect throttle operating shaft at carburettor end.
6. Remove four $\frac{1}{2}$ in. A.F. nuts and flat washers. Lift off carburettor and blank off flange on inlet manifold.

TO REFIT

Check the carburettor flange face for flatness and carefully reface if necessary. After refacing the flange face must be checked with marking on a small surface plate, or other reliable flat face. The use of a straight edge is not a satisfactory method of checking carburettor flanges for flatness, and particularly so on this carburettor.

Remove blank placed over inlet manifold flange.

One gasket is used between each side of the thick heat insulating joint fitted between the carburettor and inlet manifold.

Overtightening of the four carburettor flange fixing nuts can distort the carburettor flange.

Refit all other items removed in reverse order to that used for their removal and check adjustments of choke control cable as described under "ADJUSTMENTS".

NOTES ON DISMANTLING AND REASSEMBLY

See Fig. 14

A fully exploded view of the carburettor from which the particular position of any part can be seen is given in Fig. 14. Many of these parts can be removed and replaced with the carburettor in position on the engine.

Particular attention should be given to the following:

1. Pilot jets (75) and (77), main jets (71) and (79), and choke tubes (27) and (28) must be fitted to their respective throttle barrels. In some instances they are not interchangeable.
2. The choke tubes (27) and (28) are held in position by the two pointed set screws and locknuts (73) and (76). They are located correctly by narrow slots on their lower ends.
3. A joint (82) is used between the secondary throttle operating unit body (83) and the carburettor main body (31).
4. The small rubber sealing ring (81) must be used at its location on the vacuum passage between the secondary throttle operating unit cover (90) and body (83).
5. A brass dowel locates the vacuum drilling (4, in Fig. 3 and 4) in the carburettor body (31) and the secondary throttle operating unit body (83). There is a small restriction drilling through this dowel that must be clear before the secondary throttle operating unit can function correctly.
6. The lever (51) and items (55) to (49) must be assembled to the primary throttle spindle in the order shown in Fig. 14.
7. THE LEVER (51) MUST BE ASSEMBLED SO THAT ITS OUTER END COMES BELOW ITS ROLLER CONTACT ON THE SECONDARY THROTTLE SHAFT LEVER as shown in Fig. 10.

CARBURETTOR

TYPE — STROMBERG CD

Page

DESCRIPTION 47

OPERATION

—Fuel level 49
—Starting 50
—Slow running.. 50
—Part and full throttle 51
—Acceleration 52

STARTING THE ENGINE

—From cold 52
—When warm or hot 52

DIAGNOSIS OF FAULTS

—Excessive fuel consumption 53
—Faulty slow running 54
—Insufficient top speed 54
—Flat spot at small throttle openings 54
—Poor acceleration 54
—Difficult starting from cold.. 54

ADJUSTMENTS

—Slow running and synchronising carburettors 54
—Choke control 56
—Fast idle speed for cold starting 56
—Float level 57
—Needle position 57
—Centralising jet 57
—Full throttle position and accelerator pedal position 58

SERVICING

—Piston hydraulic damper 58
—Diaphragm — to renew 59
—Piston return spring 59
—Dismantling for cleaning 59
—Cleaning 59
—Reassembly after cleaning 59
—Removal and refitting .. ..59—62

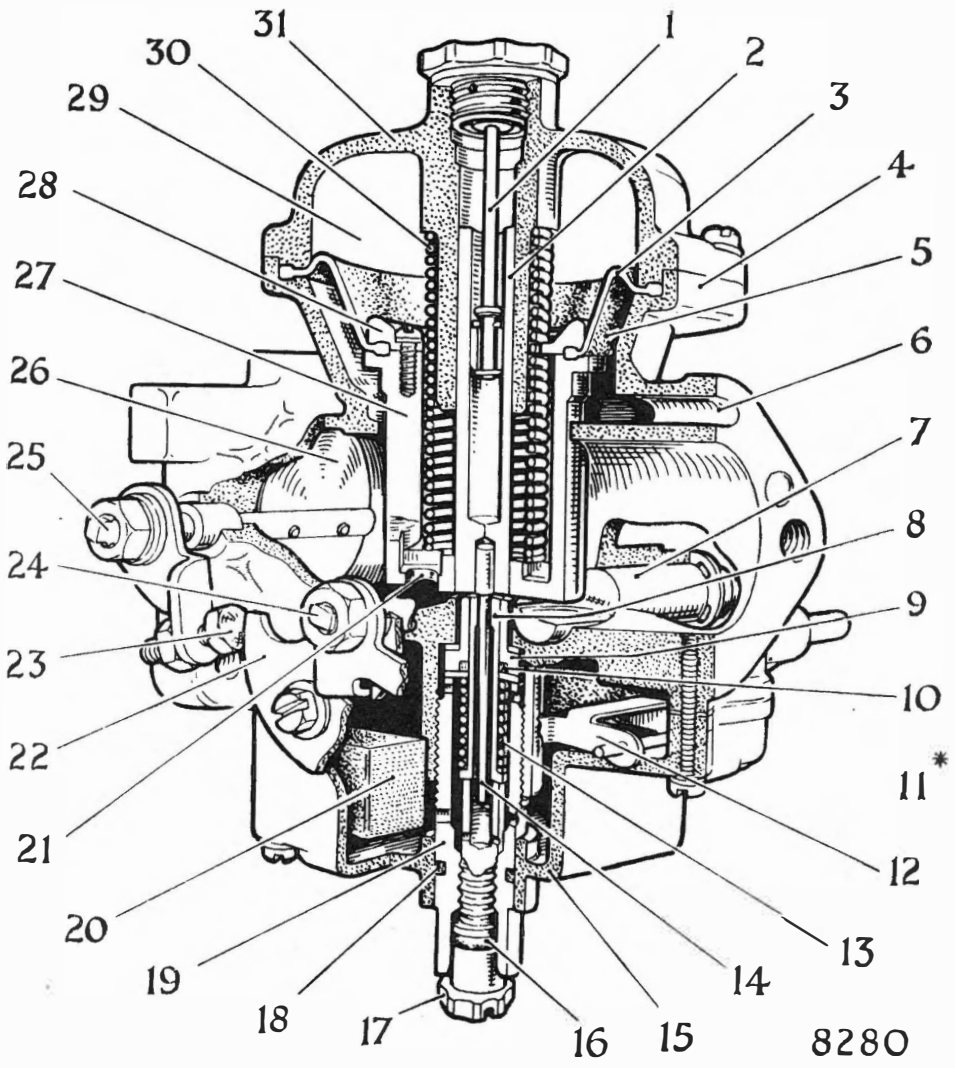

Fig. 1. *Stromberg 150 CD carburettor — part sectional view*

Key to Figs. 1—8

1. AIR VALVE HYDRAULIC DAMPER
2. GUIDE SPINDLE FOR AIR VALVE 27
3. DIAPHRAGM
4. CARBURETTOR BODY
5. AIR CHAMBER BELOW DIAPHRAGM
6. AIR FEED HOLD TO 5
7. STARTER BAR
8. JET
9. CENTRALISING BUSH
10. "O" RING
11. FLOAT NEEDLE AND SEATING—NOT SHOWN—SEE FIG. 3
12. FLOAT FULCRUM
13. JET SPRING
14. METERING NEEDLE
15. FLOAT CHAMBER
16. "O" RING
17. JET ADJUSTMENT
18. "O" RING
19. JET BUSH RETAINING SCREW
20. FLOAT
21. DEPRESSION TRANSFER HOLE (ONE SHOWN)
22. FAST IDLE CAM
23. FAST IDLE ADJUSTMENT
24. STARTER BAR SHAFT
25. THROTTLE SHAFT
26. THROTTLE VALVE
27. AIR VALVE
28. RETAINING RING FOR DIAPHRAGM
29. DEPRESSION CHAMBER ABOVE DIAPHRAGM
30. AIR VALVE RETURN SPRING
31. DEPRESSION CHAMBER COVER

STROMBERG CD CARBURETTOR

DESCRIPTION — See Figs. 1 and 2

The Stromberg carburettor suffix letters CD, denote that it is a constant depression type of carburettor. This principle of operation, sometimes referred to as constant vacuum, uses a variable choke and a needle of suitable profile moving in a single jet, to provide the fuel air mixture needed to meet all conditions of engine operation. Part sectional and external views of this carburettor are shown in Figs. 1 and 2. The principal parts of the carburettor are: the main body (4) containing the throttle (26), the float chamber (15), and the depression or vacuum chamber (29).

The float chamber (15) is situated around the jet bush retaining screw (19). The float (20) is made from a synthetic rubber and being solid, it cannot puncture.

While the engine is stationary the air valve piston (27) rests on the carburettor body as shown in Fig. 1.

When the choke control is pulled out, the cam (22) partly rotates and opens the throttle (26) to the correct position for cold starting. It also turns the starting bar (7) which lifts the air valve piston (27) and needle (14) so that the discharge area of the jet annulus between the jet (8) and needle (14) is enlarged to give the correct amount of mixture enrichment for cold starting.

Directly the engine starts the air valve piston (27) is lifted by air pressure to a position dependent upon the amount of throttle opening.

At idling speed the air valve piston (27) is raised by air pressure a small distance from the carburettor body. The jet (8) to needle (14) annulus area is then set by the jet adjustment (17) so that in conjunction with the throttle slow running setting, correct idling is obtained.

Above idling speed, the needle (14) and piston (27) are raised by air pressure acting on the underside of the diaphragm (3) above which a lower pressure exists, due to PARTIAL transference of inlet manifold vacuum to the depression chamber as the throttle is opened. Opening the throttle raises the piston and closing the throttle lowers the piston. This action gives the required fuel/air ratio and at the same time maintains an almost constant air speed over the jet orifice where the needle (14) enters the jet (8). This ensures good atomisation of the fuel as it leaves the jet annulus.

A light compression spring (30) assists to return the piston when the depression above the diaphragm (3) is reduced, as the throttle is closed.

The hydraulic damper (1) in the piston guide (2) prevents sudden rising of the air valve piston (27) when the throttle

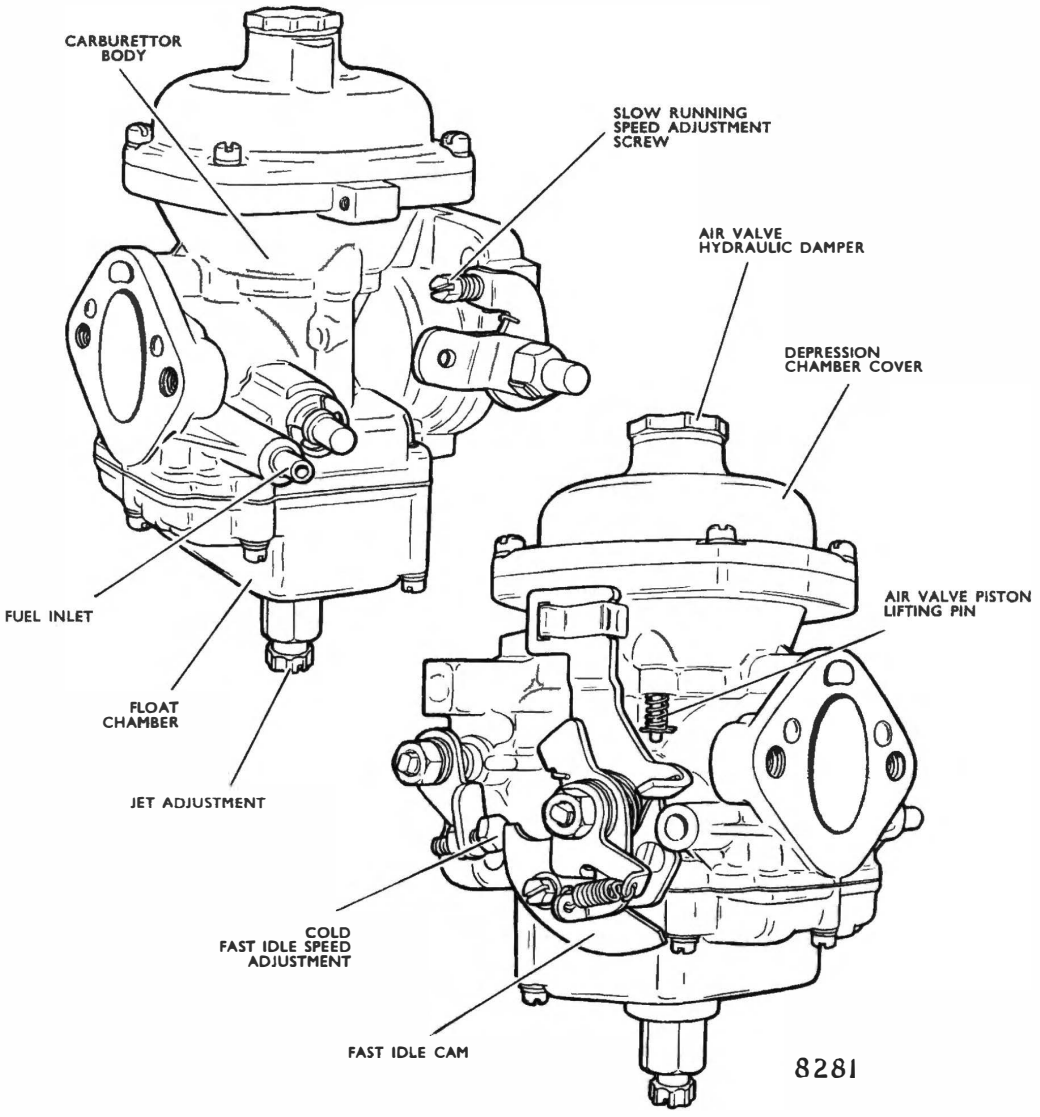

Fig. 2. *Stromberg 150 CD carburettor — external views*

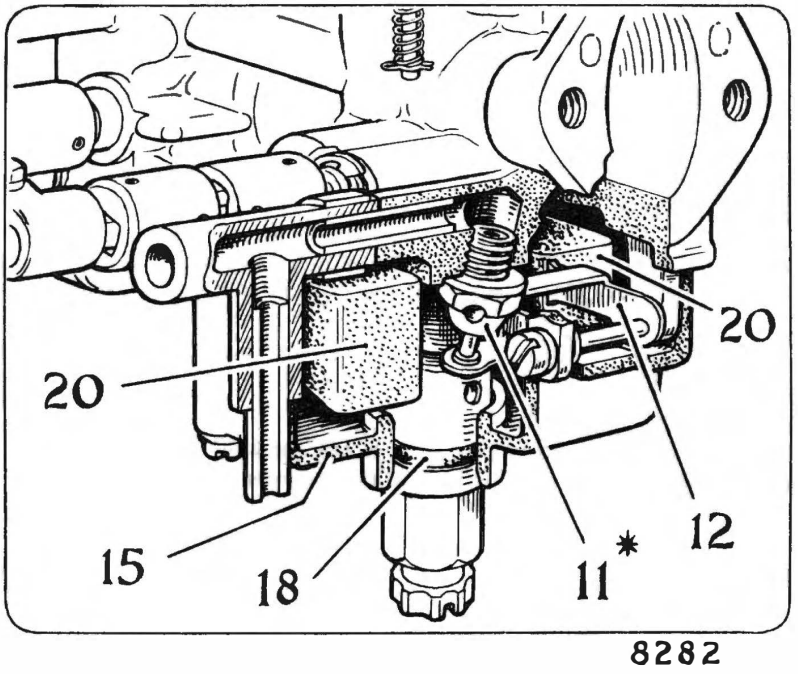

Fig. 3. *Float chamber — internal view*

is opened quickly for acceleration. This action gives the temporary enrichment needed during acceleration.

The flexible diaphragm (3) is clamped between the depression chamber cover (31) and air valve piston (27) upper end. It provides the means needed to give an air seal between the air valve piston and depression chamber and locates the air piston correctly.

In this particular application, where two carburettors are used, the throttles are coupled together with a universal coupling type of linkage that allows both throttles to open together.

OPERATION

Fuel level — See Figs. 1 and 3

The flow of fuel into the float chamber is controlled by the needle valve (11) which is closed by the float (20) when the fuel rises to its correct level. As the fuel level falls the float lowers and the needle valve admits fuel until the correct level is again reached.

The float chamber is air vented externally through a drilling to a hole leading to atmosphere behind the air intake flange. Fuel reaches the jet (8) through a drilling in the jet assembly securing screw (19).

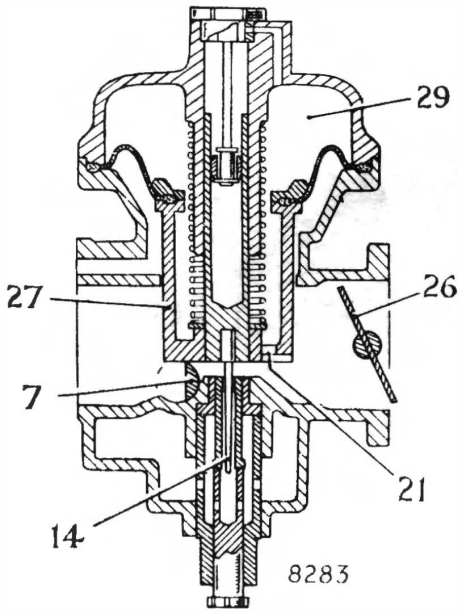

Fig. 4. *Starting operation*

Starting — See Figs. 1 and 4

Cold starting conditions require a very rich mixture for the first few seconds of running and a means of weakening the mixture progressively as the engine warms up. Correct throttle opening to the fast idle position is also necessary to prevent the engine from stalling after it fires. These conditions are met by the starter bar (7) raising the air valve piston (27) and needle (14) to increase the jet discharge area, and the cam (22) opening the throttle to the fast idle position, when the choke control is pulled out. Rotation of the starter bar (7) also restricts the air flow and increases the depression at the jet annulus.

Directly the engine starts inlet manifold depression rises. Some of this depression passes through the throttle opening and the two holes (21) in the lower end of the piston air valve (27) to the depression chamber (29). Air pressure then raises the air valve piston (27) far enough to give the air flow needed to prevent the engine from stalling.

As the engine warms up, and the choke is pushed in, the starter bar (7) lowers the piston to its normal position and the cam (22) returns so that the throttle can come against its slow-running stop.

Slow running — See Figs. 1 and 5

There is no separate idling circuit on this carburettor. Fuel is supplied by the jet (8) which is positioned by the jet adjustment (17) so that the annular space, between the needle (14) and jet (8), gives the correct fuel discharge for idling when the engine has reached its normal operating temperature.

In this condition the piston air valve (27) rises a small amount from the carburettor body as shown in Fig. 5, and the amount of air passing under the air valve piston (27), and quantity of mixture used by the engine depends on the throttle opening which is set by the slow running speed adjustment screw shown in Fig. 2.

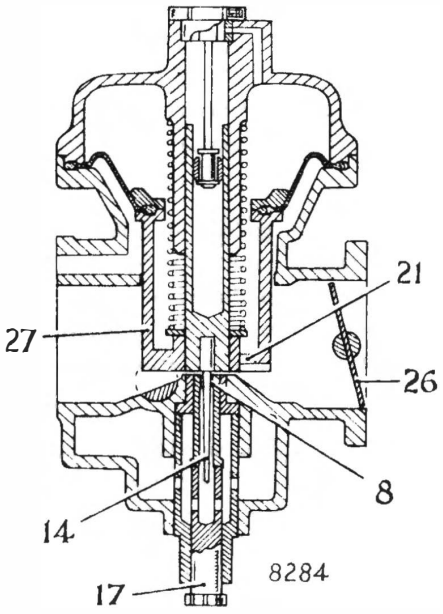

Fig. 5. *Slow running operation*

Part and full throttle driving — See Figs. 1, 6, 7 and 8

When the throttle is opened the air valve piston (27) and needle (14) rise with increase of engine speed to allow the supply of an increased quantity of fuel/air mixture to meet engine requirements.

Air flow is controlled by the throttle, and the air valve piston (27) which acts as a variable choke. Fuel metering is controlled by the varying diameters of the needle (14) which controls the annular discharge area of the jet to give the amount of fuel needed for any position taken by the air valve piston (27), as it rises and falls with increasing or decreasing engine speed.

Whenever the air flow under the air valve piston (27) reaches a certain speed a low enough depression is created above the diaphragm (3), through the two holes (21), for atmospheric pressure; acting on the underside of the diaphragm, to lift the air valve piston assembly so that it "floats" on air pressure.

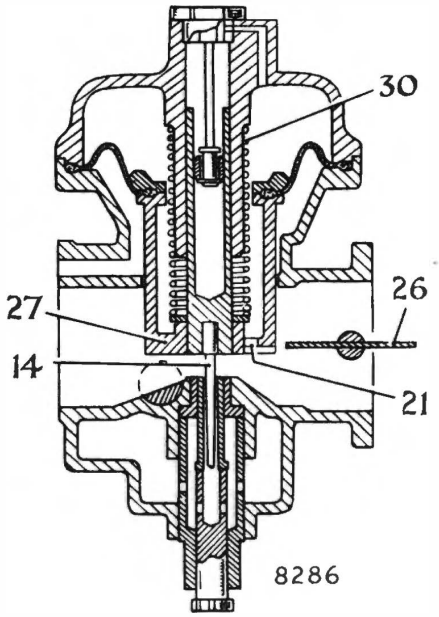

Fig. 7. *Full throttle operation — low engine speed*

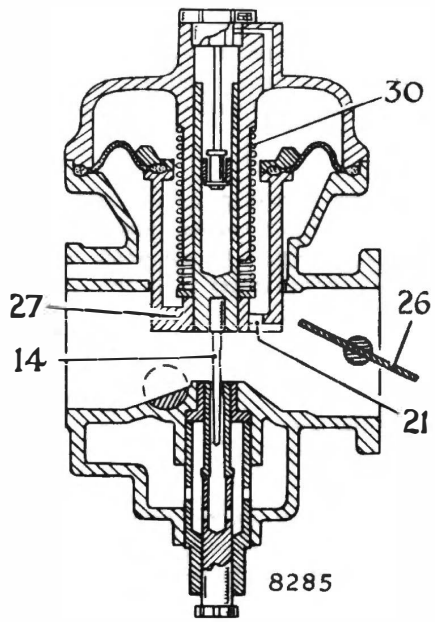

Fig. 6. *Part throttle operation — moderate engine speeds*

When the throttle is opened from the idling position, some inlet manifold depression passes to the carburettor side of the throttle. This raises the air speed under the air valve piston (27) to the point when it creates the necessary depression above the diaphragm (3) for air pressure acting on the underside of the diaphragm, to lift the air valve piston assembly a small amount. The piston ceases to rise when the air speed below the piston just maintains the depression needed above the diaphragm for the air valve piston assembly to "float" on air pressure.

When the throttle is moved open further air speed under the air valve piston (27) and depression above the diaphragm (3) are increased as THE ENGINE SPEED INCREASES, causing the air valve piston to lift until the air pressure and depression again stabilise so that the piston "floats" in a higher position.

Further movement of the throttle to its fully open position causes the air valve piston to rise by the same means as

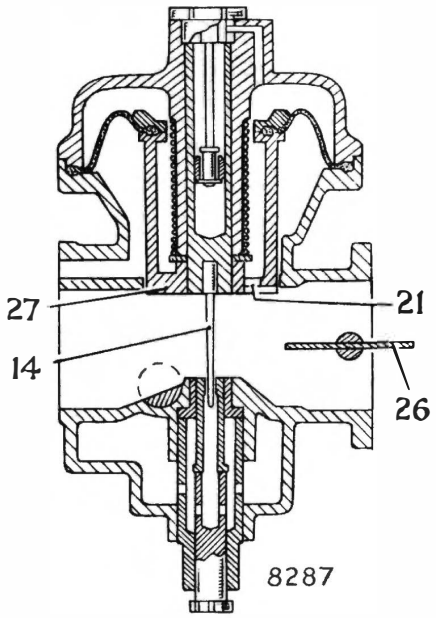

Fig. 8. *Full throttle operation — high engine speed*

before, and to "float" in its, maximum lift position shown in Fig. 8 IF THE ENGINE SPEED CONTINUES TO RISE. Figs. 6, 7 and 8 show the approximate positions taken by the air valve piston (27) for part throttle opening at moderate engine speed, full throttle opening at low engine speed, and full throttle opening at high engine speed. From these illustrations it can be seen that the air valve piston position is dependent upon the amount (weight) of air that the engine can draw through the throttle opening, and that a high air speed and almost constant depression will always exist at the fuel discharge annulus where the needle enters the jet.

The air valve piston movement is also controlled slightly by the compression spring (30). This spring is identified from the details given under "Fuel System" in the Data Section. If replaced an exactly similar spring must be fitted.

Acceleration — See Fig. 1

When the throttle is opened suddenly at low speeds the sudden inrush of air can immediately weaken the mixture. This is overcome by damping the upward movement of the air valve piston so that there is a temporary increase of fuel discharge from the jet (8) due to the increase of depression existing on the jet, while the air valve piston movement is controlled by the hydraulic damper (1) action. When the piston reaches the position given by air pressure lift against the depression in the depression chamber, the jet (8) discharge returns to normal. Downward movement of the piston is not restricted by the action of the hydraulic damper.

STARTING THE ENGINE

From cold

Pull the choke control out fully. Operate the starter. When the engine starts, move the choke control back, far enough for the engine to run at a fast idling speed without stalling. As the engine warms up the choke control should be moved as far back as possible.

The choke control operates as a hand throttle for the first part of its movement. This enables a faster idling speed to be obtained when the engine is cold which is useful when manoeuvring in confined spaces.

When warm or hot

When the engine is warm, operate the starter. Should the engine hesitate to start depress the accelerator pedal a short way, and release when the engine starts.

If the engine is difficult to start when hot, fully depress the accelerator while operating the starter, and release it directly the engine starts.

DIAGNOSIS OF FAULTS

The carburettor cannot function correctly if the ignition system, fuel supply, or engine condition are at fault.

Unless known to be in perfect condition the following items should be checked before making any adjustments, or concluding that the carburettor is not operating correctly.

If after making the following checks, the carburettor is proved to be faulty the possible cause, or causes, will be found under the headings "Excessive Fuel Consumption" and onwards.

Ignition system

Check spark plugs. Clean and set gaps.

Check condition and tightness of H.T. and L.T. leads.

Check condition and setting of contact breaker points, and moving contact point spring tension.

Ensure that the centrifugal and vacuum advance mechanisms are working correctly.

Fuel system

Ensure that an adequate supply of fuel is being delivered to the float chamber.

Check that the crankcase regulator valve in the inlet manifold is operating correctly. See Section B index.

Check that fuel pump output pressure is correct to the figures given under "Fuel System" in the Data Section of the Manual.

Examine induction manifold and carburettor flanges for air leaks.

Ensure that the air cleaners are fitted correctly and not restricting the air supply to the carburettor due to the element being dirty.

Compression

Check valve clearances and compression pressures.

Make sure valves are not sticking.

Exhaust system

Check that the exhaust system has not become damaged or blocked.

Excessive fuel consumption — See Fig. 1

1. Ensure that the complaint is genuine and not caused by heavy traffic conditions or other adverse operating conditions.

2. Check that each carburettor air valve piston (27) falls freely when lifted to its full extent and then allowed to fall. Each piston should require a noticeable effort to lift it against the action of its hydraulic damper (1) and should fall with a distinct "tap" sound onto the carburettor body.

3. Check that the slow running is correctly set by raising each piston with its lifting pin one piston at a time, without opening the throttles while the engine is running. The lifting pin is shown in Figs. 2 and 9. When this is done the engine speed should fall slightly. Incorrect adjustment of the slow running on one or both carburettors will affect the whole range of fuel metering by the jet(s) and needle(s).

4. If suspect, check that the correct needles are fitted. If either needle or jet shows signs of wear they should be renewed. The needle reference designation is given in the Data Section under "Fuel System".

5. Check the entire system for fuel leaks, particularly between the float chamber and centralising bolt, and between this bolt and the jet adjustment. "O" rings (18) and (16) are used between those items.

6. Check that fuel is not flooding over from the top of the jet due to a fault or dirt in the needle valve and seat, or incorrect adjustment of the float position.

7. Check the "O" ring (10) between the jet (8) and jet bushing (9) is not missing and that it makes a good seal between these items.

8. Check that the diaphragm (3) is not damaged and that it is correctly fitted at its inner and outer edges.

Faulty slow running

1. Check that either air valve piston is not sticking and that each piston falls with a decided "tap" onto the carburettor body.
2. Check operation of crankcase regulator valve. See Section B, Index and (5) Fig. 9.
3. Make sure that flooding is not occurring in either carburettor.
4. Adjust the slow running and synchronise the carburettors as described under "ADJUSTMENTS".

Insufficient top speed — See Fig. 1

1. Check that the throttles are opening fully when the accelerator pedal is fully depressed by a person sitting in the driver's seat.
2. Check that both air valve pistons (27) move freely to the full extent of their travel, and that their needles (14) are correctly positioned in the pistons. The needle shoulder should be flush with the bottom of the piston.
3. Check condition of each diaphragm (3). If this item is defective or not fitted correctly it will allow air leakage into the depression chamber (29) and this will prevent the air valve piston and needle from rising correctly as the throttle is partly or fully opened.
4. Ensure that the correct needles are fitted, as specified in the Data Section under "Fuel System".

Flat spot at small throttle opening

1. Check that the slow running adjustment is not too weak and that the carburettors are correctly synchronised.
2. Check that the vacuum advance pipe system, and diaphragm in the distributor vacuum advance are free from air leaks. Should an air leak exist in the vacuum advance system the normal fuel/air mixture ratio will be weakened by extra air as the engine speed is increased from idling.

Poor acceleration — See Fig. 1

1. Check that the piston spindle bore, in which the hydraulic damper operates is filled with clean engine oil. Very low viscosity oils such as 5W/20 must not be used for this purpose.
2. After filling with clean engine oil check that the air valve piston (27) offers resistance to upward movement when lifted with a finger.

Difficult starting from cold — See Fig. 2

1. Check that control is moving the cam on the end of the starting shaft over the whole of its operating range, when the control is pulled out fully.
2. Check that the throttle is being opened to its fast idle position when the choke control is pulled fully out. See "Fast idle speed for cold starting" under "ADJUSTMENTS".
3. Check that the needles (14) are positioned correctly in the piston (27). See "Needle position" under ADJUSTMENTS.

ADJUSTMENTS

Slow running and synchronising carburettors — See Fig. 9

When correctly adjusted and synchronised each carburettor will provide the same amount of fuel air mixture. When making these adjustments the following procedure should be carried out:

1. Loosen off the clamping bolt (4) on the throttle coupling close to the front carburettor.
2. Check that shoulders of both needles (14) are flush with the lower faces of the air valves (27). See Fig. 12.
3. Screw up each jet adjusting screw (6) until each jet just makes contact with the lower side of the piston WITHOUT RAISING THE PISTON, and then screw back each adjustment two and a quarter turns.
4. Slacken off both throttle slow running speed adjustment screws (3) until their ends are clear of the

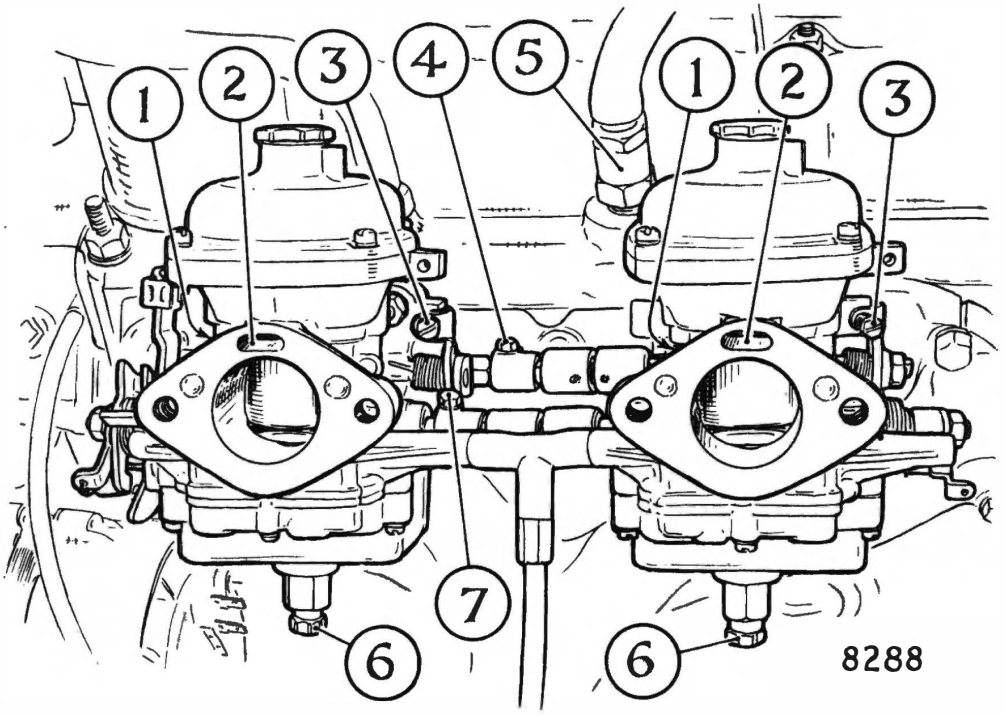

1. AIR VALVE PISTON LIFTING PINS
2. AIR FEED PORTS TO UNDERSIDES OF DIAPHRAGMS
3. SLOW RUNNING SPEED ADJUSTMENT SCREWS
4. CLAMPING BOLT—ON COUPLING FOR THROTTLES
5. CRANKCASE VENTILATION VALVE
6. ADJUSTMENTS FOR JETS
7. CLAMPING BOLT—ON COUPLING FOR STARTER BARS

Fig. 9. *Throttle synchronisation and jet adjustments*

carburettor flanges when each throttle is held closed. Rotate each screw (3) clockwise until a ·002 in. (·05 mm.) feeler, or a narrow strip of thin paper, is lightly gripped between the screw ends and carburettor flanges, as the throttles are held closed.

From these positions rotate each screw two turns clockwise to open each throttle by an EQUAL amount.

5. Tighten the clamping bolt (4).

6. Run the engine until it reaches its proper running temperature.

7. Adjust the engine slow running mixture with the adjustments (6) so that the engine idles evenly and each slow running speed adjusting screw (3) an equal amount so that the correct idling speed is obtained. This speed is given in the Data Section under "Fuel System". Upward, or clockwise movement of the adjustment (6) weakens the mixture, and downward movement richens the mixture.

8. Check the throttle synchronisation by listening at each carburettor inlet with a suitable length of rubber hose. Each carburettor should give a similar "hiss" when the engine is idling.

Throttle synchronisation can also be checked with a Crypton B.91 synchro test instrument provided that the instrument rubber sealing face does not obstruct the air ports (2) shown in Fig. 9. To do this the rubber sealing face can be cut away so that a seal is not made between the bottom of the port (2) and the instrument adjustable intake as all air passing into the port (2) must pass through the instrument intake.

If the throttle synchronisation (balance) setting is found to be incorrect by either of these tests the

clamping bolt (4) on the interconnection should be slackened off and the throttles adjusted individually so that equal "hiss" or synchro-test readings are obtained.

9. After ensuring that the throttles are correctly synchronised the jet adjustments (6) should be finally set. This can be done by connecting a multi-range tachometer to the engine, and using the 0—1000 r.p.m. scale adjust each carburettor slow running mixture just off the weak condition until the highest r.p.m. is reached, without moving the throttle.

10. Finally recheck, or tighten, the clamp bolt (4) on the connection and ensure that the correct idling speed and even running are obtained while the throttle stop screws (3) rest against the carburettor flange.

Choke control — See Fig. 10

The choke control securing set screw, on the cam (22) should be tightened when the choke control is about $\frac{1}{8}$ in. (3 mm.) from its normal fully back position. This ensures that the cam (22) rests against its stop when the control is moved fully back.

Fast idle speed for cold starting

This adjustment ensures that the engine runs up to a suitable speed, directly it fires, when the choke control is pulled out fully.

The correct fast idle throttle opening clearance is given in the General Data Section under "Fuel System", and has been obtained by actual cold room starting tests. This amount of opening must be obtained when making this adjustment to overcome a complaint of difficult cold starting under adverse operating conditions.

Two methods of adjustment are possible and either method is carried out on the front carburettor only, as the throttles and starter bars of both carburettors are interconnected.

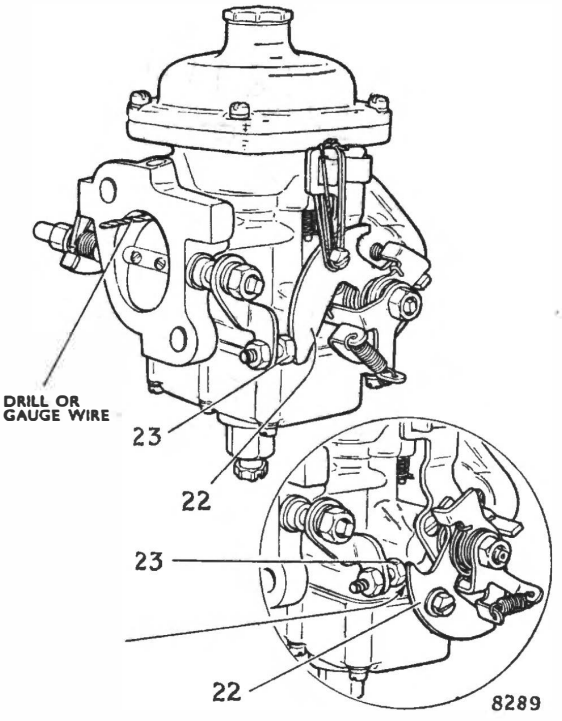

Fig. 10. *Setting throttle gap for cold starting*

Method 1 With carburettors on engine — See Fig. 10 inset

1. Remove air cleaners from the carburettors.

2. Ensure that the carburettors are properly synchronised and that the slow running is correctly set, with the choke control in its fully back position.

3. With the choke control in this position, adjust the bolt (23) so that there is a clearance of 02-·03 ins. (·5-·7 mm.) between the bolt head and cam (22) when the bolt lock nut is tightened.

4. Check, and, if necessary, adjust the interconnection between the starter bars so that each air valve piston is lifted an equal amount when the choke lever is pulled out as far as possible.

5. Refit air cleaners.

Method 2 With front carburettor removed from engine — See Fig. 10

1. Refer to "Fuel System" in Data Section to obtain the fast idle throttle setting. Insert a drill shank or a wire of this diameter, or flattened to this dimension, between the throttle edge and throttle bore at right angles to the centre of the throttle spindle. Hold the throttle closed against this gauge.

2. Tie the fast idle cam in the position shown in Fig. 10 and adjust the bolt head (23) to just contact the cam (22) and then tighten the bolt locknut.

Float level — See Fig. 11

This check or adjustment is only needed if flooding or excessive fuel consumption occur.

The highest points of the carburettor floats should be 19-20 mm. above the main body face when the carburettor is in an inverted position.

If the float level needs correction the float arm extension, that contacts the float needle, can be carefully bent. Small corrections can also be made by putting an extra washer under the needle seating.

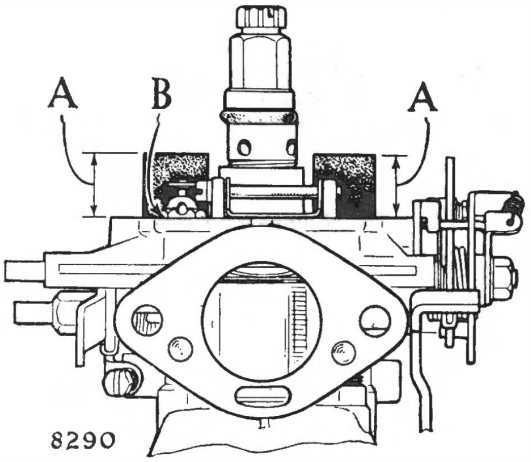

A 19—20 mm.

B FLOAT NEEDLE VALVE AND SEAT

Fig. 11. *Float setting dimension position*

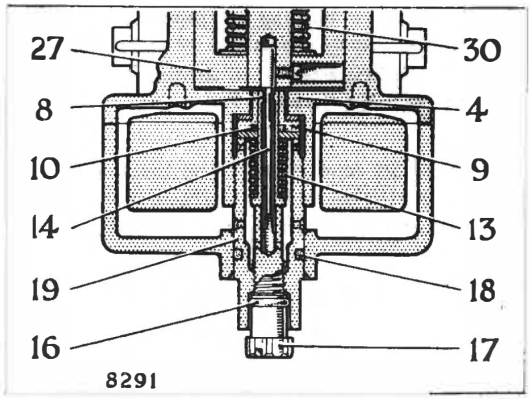

Fig. 12. *Jet centralisation details*

Needle position — See Fig. 12

As shown in Fig. 12 the needle (14) shoulder should be level with the air valve piston (27) lower face.

Centralising jet — See Fig. 12

The jet is correctly centralised to the needle if the air valve piston will fall freely with a distinct "tap" onto the carburettor body when the jet is flush with its brass bushing. The jet is correctly centralised during the production assembly of the carburettor and further adjustment is not required normally.

The jet (8) will require re-centralising if it is removed for any reason, and this should be done in the following manner with the carburettor in position.

1. Check that the needle shoulder is flush with the underside of the air valve piston.

2. Slacken the jet bushing retaining screw (19) three flats (half a turn) with a $\frac{3}{8}$ in. A.F. spanner.

3. Screw up the jet adjustment screw (17) as far as possible.

4. Give the retaining screw (19) a sharp tap, with the spanner head, on one of its hexagon sides. This assists

the jet and its bushing to centralise around the needle, and usually allows the air valve piston to fall freely at the first attempt to position the jet. Tighten the jet retaining screw (19).

5. Adjust the jet adjustment (17) so that the top of the jet (8) is level with its bushing (9). In this position the air valve piston (27) should fall with a distinct "tap" onto the carburettor body, when it is lifted and released.

Full throttle position and accelerator pedal position

An adjustment for setting the accelerator pedal is provided at the lever on the rear end of the throttle operating shaft above the carburettors, where a rod connects this lever to the lever on the end of the accelerator pedal shaft.

This adjustment set screw should be tightened when the throttles are fully open with the accelerator pedal 1 in. (25 mm.) from the floor covering.

SERVICING

The following information is given for general guidance. A fully exploded view is shown in Fig. 14.

Hydraulic damper — See Fig. 1

The air valve piston spindle bore (2) in which the damper (1) fits should be filled with clean engine oil. Very low viscosity oils such as 5W/20 must not be used for this purpose.

When acting correctly the hydraulic damper should cause the air valve piston to offer resistance to upward movement when lifted with a finger. On the downward movement the air valve piston should fall freely without any resistance.

If the hydraulic damper does not function correctly after cleaning out the air valve piston spindle bore, cleaning the damper and refilling with the correct grade of oil, it should be replaced.

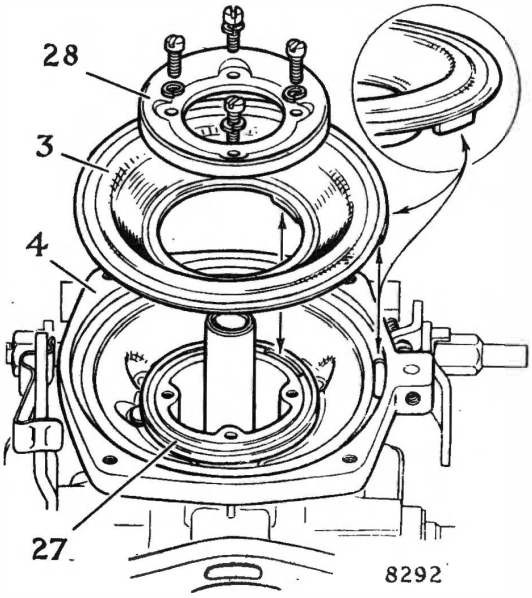

Fig. 13. *Diaphragm location*

Diaphragm — to renew — See Fig. 13

The diaphragm (3) can be renewed without removing the carburettor(s) from the engine by removing the depression chamber cover screws and cover, lifting out the air valve piston, and removing the screws holding the diaphragm retaining ring (28) to the air valve piston.

When fitting the new diaphragm its locating tabs must locate in the locating positions provided in the carburettor body and air valve piston upper end. These positions are shown by arrowheads in Fig. 13.

The diaphragm retaining ring requires very careful replacement because it is easy to misplace the diaphragm from its correct position on the air valve piston.

Air valve piston return spring — See Fig. 1

This spring (30) must not be stretched or shortened. Its details are given in the Data Section under "Fuel System". If replaced, an exactly similar spring must be fitted. No washer is fitted below the spring inside the piston (27).

Dismantling for cleaning — See Fig. 1

The following procedure can be carried out with the carburettor on or off the engine:

1. Remove the six screws holding the float chamber to the carburettor main body, and remove the float chamber by drawing it down the jet bushing retaining screw. Because of the "O" ring (18) fit this can be rather difficult.

2. Remove the jet adjusting screw (17).

3. Remove the hydraulic damper (1) and the depression chamber cover (31).

4. Lift out the air valve piston, needle and diaphragm assembly.

There is no need to remove the jet bush retaining screw (19) when cleaning only is required.

Cleaning

Fuel, or paraffin (kerosene), ONLY, should be used for cleaning the carburettor parts. NOTHING ELSE can be used. Certain cleaning and degreasing fluids will ruin the diaphragm and "O" rings.

The jet, and the space inside the jet bush retaining screw should be blown out with clean compressed air.

Reassembly after cleaning — See Figs. 13 and 14

This is a reversal of the dismantling procedure. If necessary the float chamber joint (23) and "O" ring (33) should be renewed.

When refitting the diaphragm and air valve piston the locating lip on the diaphragm must fit in the corresponding locating recess in the carburettor body.

As the jet adjusting screw was removed it will be necesasry to reset the slow running and check the synchronisation of the carburettors.

Removal

Remove the two air cleaners.

Disconnect fuel pipe from carburettors.

Disconnect choke control inner and outer cable and throttle operating rod from the front carburettor.

Loosen off the interconnecting shaft clamp bolts (4) and (7) shown in Fig. 9.

Remove two carburettor flange fixing nuts on each carburettor. Lift off carburettors together and then draw apart from the throttle and starter bar interconnecting shafts.

continued on page 62

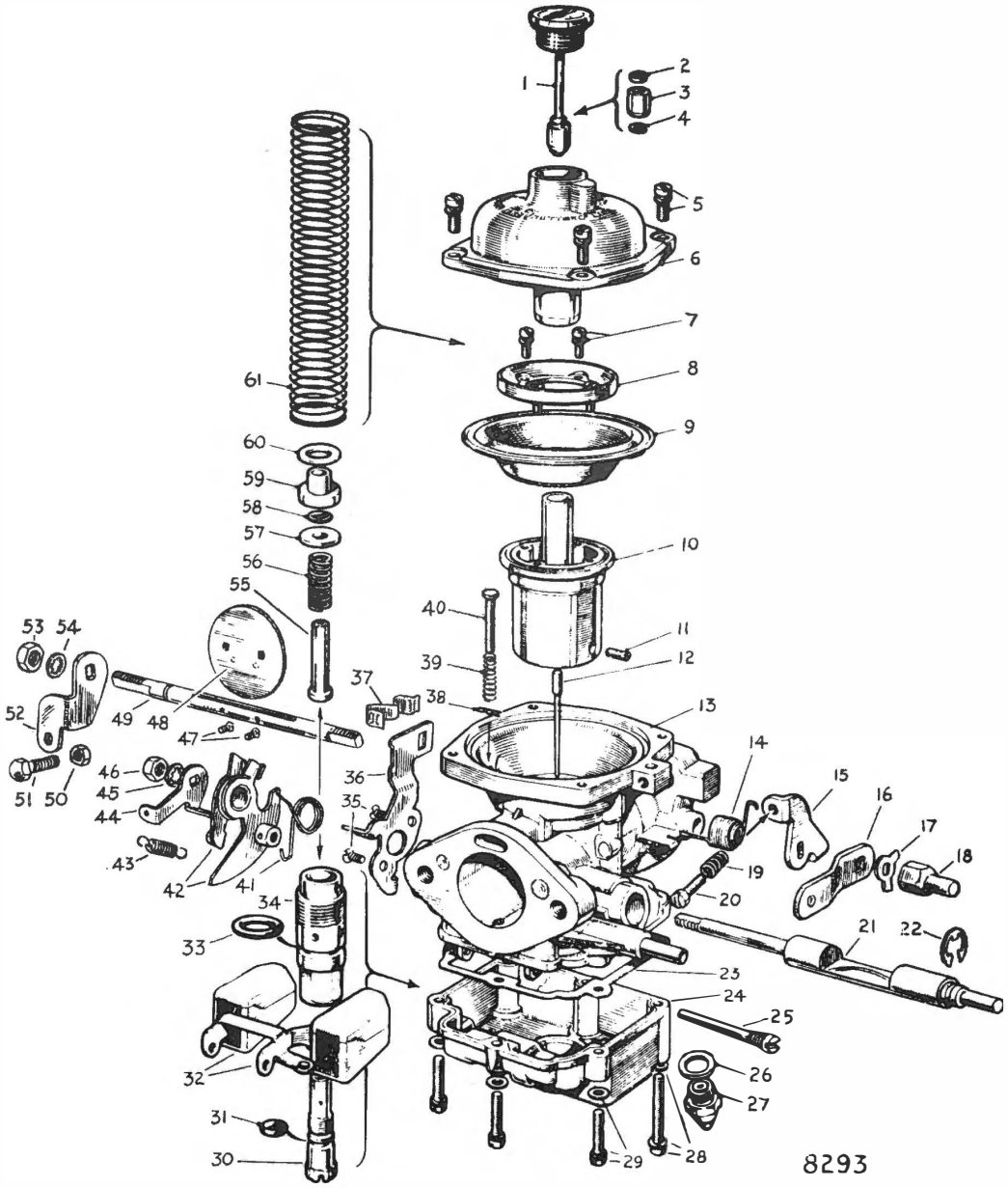

Fig. 14. *Stromberg 150 carburettor — exploded view*

CARBURETTOR PARTS — See Fig. 14

1. AIR VALVE PISTON DAMPER ASSEMBLY
2. WASHER FOR DAMPER
3. BUSHING FOR DAMPER
4. RETAINING RING FOR DAMPER
5. SCREW AND SPRING WASHER
6. SUCTION CHAMBER COVER
7. DIAPHRAGM RETAINING RING SCREWS AND SPRING WASHERS
8. DIAPHRAGM RETAINING RING
9. DIAPHRAGM
10. AIR VALVE PISTON AND SHAFT
11. LOCKING SCREW FOR METERING NEEDLE
12. METERING NEEDLE
13. CARBURETTOR MAIN BODY
14. THROTTLE RETURN SPRING
15. THROTTLE STOP LEVER
16. THROTTLE LEVER
17. LOCKING WASHER
18. NUT FOR THROTTLE LEVER
19. THROTTLE STOP SCREW SPRING
20. THROTTLE STOP SCREW
21. STARTER BAR
22. RETAINING RING FOR STARTER BAR
23. GASKET FOR FLOAT CHAMBER
24. FLOAT CHAMBER
25. FLOAT FULCRUM PIN
26. WASHER FOR NEEDLE SEATING
27. FLOAT NEEDLE VALVE AND SEATING
28. SCREW AND SPRING WASHER– LONG, THREE USED
29. SCREW AND SPRING WASHER– SHORT, THREE USED
30. JET ADJUSTMENT
31. "O" FOR JET ADJUSTMENT
32. FLOAT ASSEMBLY
33. "O" RING FOR BUSHING RETAINING SCREW
34. BUSHING RETAINING SCREW
35. COUNTERSINK SCREWS HOLDING CHOKE CABLE BRACKET
36. CHOKE CABLE BRACKET
37. CHOKE CABLE RETAINING CLIP
38. SPRING RETAINER FOR AIR VALVE LIFTING PIN
39. SPRING FOR AIR VALVE LIFTING PIN
40. AIR VALVE LIFTING PIN
41. FAST IDLE CAM RETURN SPRING
42. FAST IDLE CAM AND LEVER ASSEMBLY
43. SPRING
44. STARTER BAR OPERATING LEVER
45. LOCK WASHER
46. NUT
47. THROTTLE FIXING SCREWS
48. THROTTLE
49. THROTTLE SPINDLE
50. LOCK NUT FOR FAST IDLE SCREW
51. FAST IDLE ADJUSTMENT SCREW
52. FAST IDLE LEVER—ON THROTTLE SPINDLE
53. NUT
54. LOCK WASHER
55. JET
56. JET SPRING
57. WASHER BELOW JET "O" RING
58. "O" RING—JET
59. BUSHING FOR JET
60. BUSHING WASHER
61. AIR VALVE RETURN SPRING

Refitting

Refitting the carburettors is a reversal of the removal procedure.

After refitting, the starter bar coupling clamps should be set so that the air valve pistons are raised by an equal amount when the choke control is pulled out. Also the throttles should be synchronised and the slow running adjusted as described on page 54.

Check that the air valve spindle is full of clean engine oil to ensure correct action of damper. See "Hydraulic damper" under SERVICING.

AIR CLEANERS

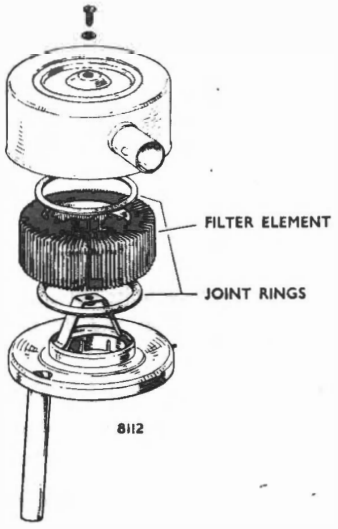

Fig. 1. *Air cleaner—circular element type*

AIR CLEANER USED WITH ZENITH IV CARBURETTOR — See Fig. 1

THE FILTER ELEMENT IS USED DRY. IT MUST NOT BE OILED OR WASHED IN ANY FLUID. It should be renewed at the recommended intervals given in the Owner's Handbook.

To remove filter element

1. Remove cover retaining screw and lift off top cover.
2. Lift off the filter element.

To fit new filter element

1. Clean out the top cover and bottom mounting plate making sure that no dirt enters the carburettor air intake.
2. Check that the joint rings used above and below the element are in good condition, and positioned correctly around their locations inside the filter cover and filter base.
3. Place the filter element in position on the filter base plate and refit the top cover and its retaining screw.

AIR CLEANER USED WITH SOLEX P.A.I.A.S. CARBURETTOR — See Fig. 2

The replaceable pad type element for this type of filter is supplied in an oil wetted condition, inside a sealed plastic bag. No attempt should be made to clean either a new or used element and they must not be further wetted with any kind of fluid.

The element should be renewed at the recommended intervals given in the Owner's Handbook.

To remove filter element

1. Release the six spring clips holding the upper and lower housing of the unit together.
2. Remove the four wing nuts, spring washers and flat washers holding the carburettor end of the upper body to the carburettor and lift off upper body.
3. Remove existing fibre element and discard.
4. Clean out the upper and lower housings ensuring that nothing enters the carburettor intake.

To fit new filter element

1. Remove new element from its plastic bag and place it in position, making certain that its sealing bead is located in the lip of the air cleaner base, and that the SMOOTH side of the element is facing upwards.
2. Refit the air cleaner cover so that it is correctly located over the element sealing band, and refasten the six spring clips.

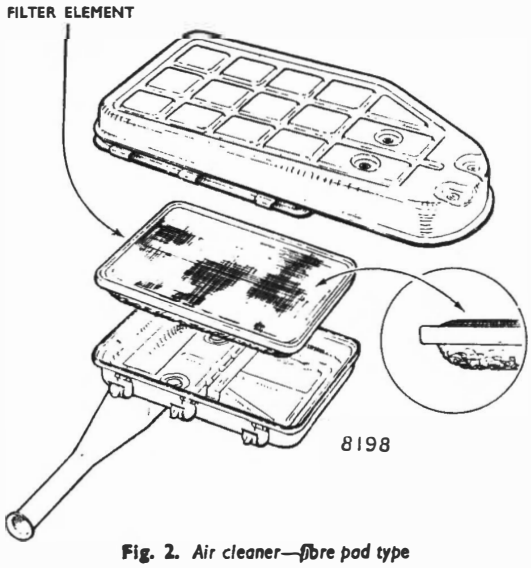

Fig. 2. *Air cleaner—fibre pad type*

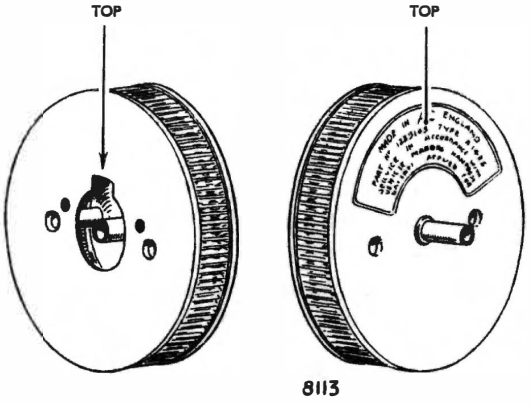

Fig. 3. *Air cleaner—disposable type*

3. Check that the rubber joint is in position on the carburettor top face.

4. Refit the four wing nuts, spring washers and flat washers holding the unit to the carburettor intake. Tighten the four wing nuts by hand only.

AIR CLEANERS USED WITH STROMBERG CD CARBURETTORS — See Fig. 3

These air cleaners are renewed as complete units at the recommended intervals given in the Owners Handbook. They are used in a DRY condition and no attempt should be made to clean them.

To remove

1. Pull off the rubber pipe connected to both air cleaner centres.

2. Remove the four bolts holding the air cleaners to the carburettor flanges and lift off the air cleaners.

To replace

1. If necessary renew the gaskets used between the air cleaners and carburettor flanges.

2. When fitting the new air cleaners or gaskets, the cut-away MUST be fitted uppermost as shown in Fig. 3. Incorrect fitting will cut off the air feed to the underside of the carburettor air valve diaphragm and thus prevent the carburettor from operating correctly.

CLUTCH AND PROPELLER SHAFT

SECTION D

CONTENTS

Page

CLUTCH UNIT

—Description 2

—Operation 3

—Adjustment of pedal 3

—Clutch assembly and driven plate—To remove and refit 4

—Maintenance 4

—Cover assembly 4

—Driven plate 4

—Release bearing—To remove and refit 4

HYDRAULIC SYSTEM

—Master cylinder—Description 5

—To remove, dismantle and reassemble 6

—To refit 7

—Slave cylinder—Description 7

—To remove, dismantle, reassemble and refit 7

—Bleeding the system 8

PROPELLER SHAFT

—General 8

—To remove and refit 8

UNIVERSAL JOINTS

—To dismantle and reassemble 9

CLUTCH AND PROPELLER SHAFT

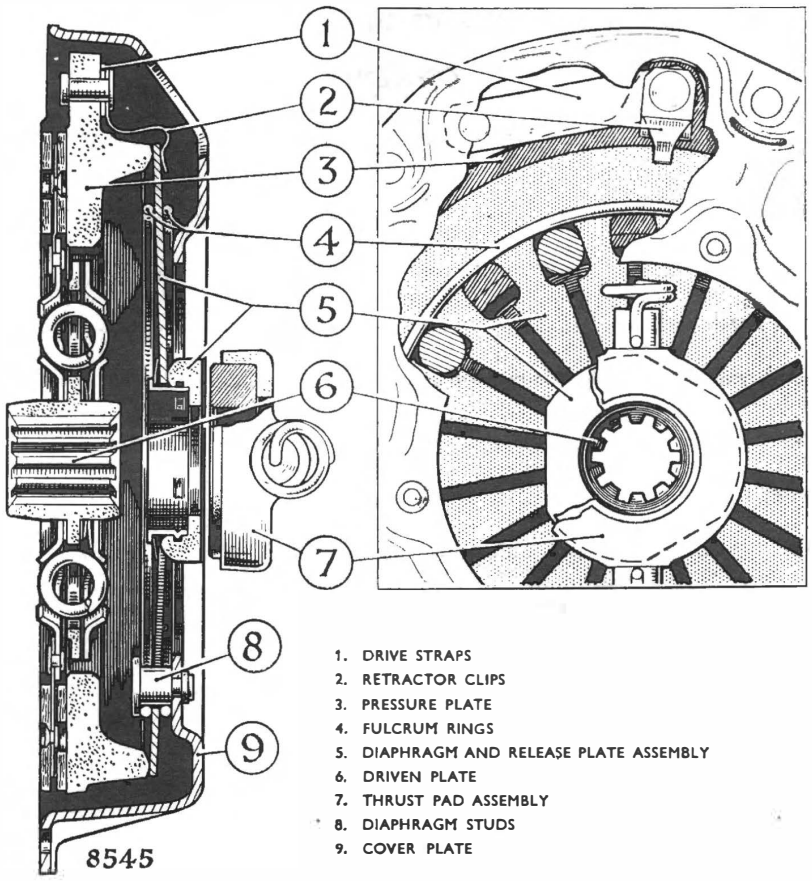

Fig. 1. *Sectional view of diaphragm clutch*

CLUTCH UNIT

DESCRIPTION (Figs. 1 and 2)

A single dry plate, diaphragm spring, strap drive clutch is fitted, incorporating a copper impregnated graphite release bearing, which is self-lubricating.

The assembly consists of a pressed steel cover (9) and a cast iron pressure plate (3) which are linked together by three steel straps (1). These are attached at one end to the cover, and at the other end to the pressure plate. The straps are arranged tangentially so that they can deflect during clutch operation, without disturbing the concentricity of the assembly, thus ensuring the maintenance of the initial correct balance.

The diaphragm spring is pinched between two fulcrum rings (4) which are secured to the cover by special rivets (8).

A release plate assembly (5) is attached to the diaphragm.

Finally, three retractor clips (2) riveted to the pressure plate, clip over the rim of the diaphragm spring, to ensure that the pressure plate retracts during clutch disengagement.

No servicing should be attempted on this assembly

The unit must be replaced, when necessary, by a complete assembly.

Do not lift or pull the clutch unit by means of the release plate.

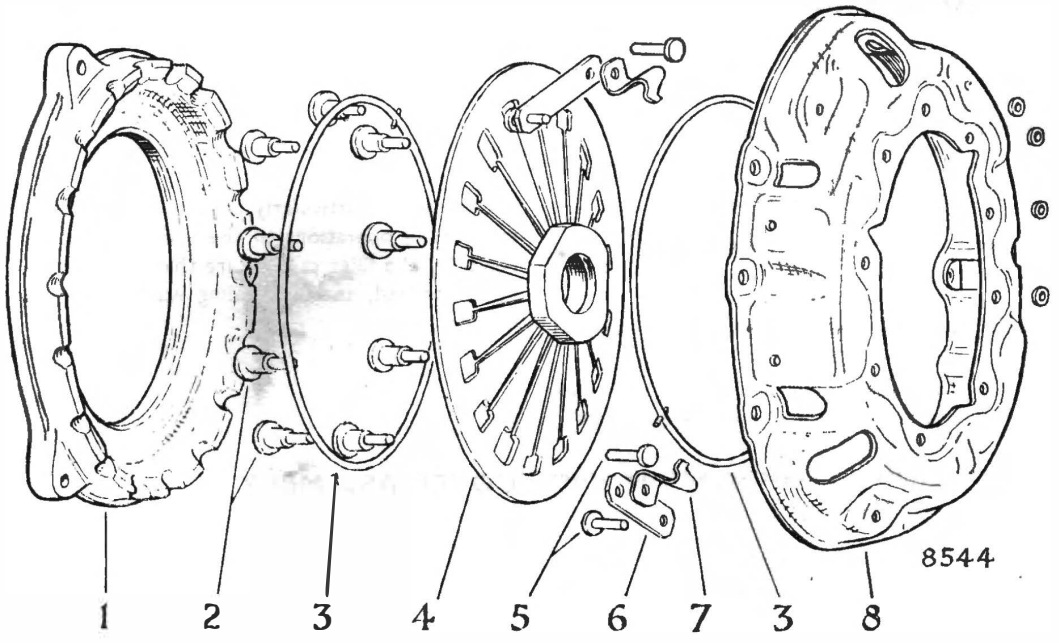

Fig. 2. *Exploded view of clutch assembly*

1. PRESSURE PLATE
2. DIAPHRAGM STUDS
3. FULCRUM RINGS
4. DIAPHRAGM AND RELEASE PLATE ASSEMBLY
5. RIVETS
6. DRIVE STRAPS
7. RETRACTOR CLIP
8. COVER PLATE

OPERATION

When the cover assembly and driven plate are bolted to the flywheel, the diaphragm spring comes under installation load, and is deflected from its free shallow coned profile to an approximately flattened condition. This deflection, via the fulcrum ring, provides the load on the pressure plate. Pressure on the release plate will further deflect the diaphragm spring, retracting the periphery due to the leverage about the inner fulcrum ring.

This action results in the diaphragm spring load being relieved from the pressure plate, thus disengaging the clutch.

The clutch is operated hydraulically by a hydrostatic slave cylinder. No adjustment is necessary or provided for at the slave cylinder.

The operating mechanism consists of a master cylinder, connected directly to the pedal, and a hydraulic fluid pipe running to the slave cylinder, which in turn is attached by a push rod to the withdrawal lever.

Provision for bleeding the system is made on the slave cylinder.

Adjustment of pedal free play

Measure the clutch pedal free play, using feeler gauges between the pedal stem and the pedal stop, located behind the parcel tray. This should be ·045 in. (1·15mm).

Adjust as follows:—

Push back the pedal return spring and cap and loosen the master cylinder push rod lock nut, holding the push rod by the two flats provided. (See Fig. 3). Turn the push rod until the correct clearance has been obtained.

Turning clockwise will reduce the clearance, anti-clockwise will increase the clearance. When correct re-tighten the locknut.

Any alteration to the setting of the pedal stop will affect both the clutch and brake pedal clearances, and should be left undisturbed as far as possible. If it is necessary to remove the stop, mark the position and re-check the pedal clearances after re-fitting.

CLUTCH ASSEMBLY AND DRIVEN PLATE

To remove

Drain the fluid from the slave cylinder bleed screw.

Disconnect the pipe to the slave cylinder.

Remove gearbox complete with bell-housing. (See Section E).

Remove setscrews securing the clutch cover to flywheel.

It is important that these should be slackened off evenly to prevent undue strain on the cover at any one point.

Remove the clutch assembly together with the driven plate.

To refit

When refitting, the clutch driven plate is marked "this side to flywheel". Lubricate the splines with waterproof grease, such as Shell SB.2498.

Place the driven plate in position using Tool No. RG.41 or a spare primary shaft, thus centralising the plate when the clutch is fitted.

This instruction must be strictly adhered to, otherwise it will be impossible to enter the gearbox primary shaft when fitting the gearbox.

Locate the clutch cover on the dowels, and tighten the securing screws evenly and diagonally.

Remove the tool or primary shaft, and refit the gearbox, complete with bell-housing (See Section E).

Refit the pipe to the slave cylinder, refill the master cylinder with fluid (see Section P), and bleed the system (see "Bleeding the system").

MAINTENANCE

The only maintenance required is to ensure that the hydraulic system has an adequate supply of fluid, and should the pedal become spongy, the system must be bled. (See "Bleeding the system").

The master cylinder reservoir level should be maintained to within $\frac{1}{2}$ in. (12 mm.) from the top of the container.

Only the fluid specified in Section P should be used.

Before removing the filler cap, see that it is wiped clean.

Cleanliness is particularly important when carrying out any service operations to the hydraulic system. When replacing the filler cap, ensure that the breather hole is not restricted, and that the sealing washer is in good condition.

COVER ASSEMBLY

No servicing should be attempted on this assembly. The unit is built and balanced during manufacture and must be replaced, when necessary, by a complete assembly.

CLUTCH DRIVEN PLATE

Examine the driven plate for wear or damage as follows:—

1. The internal splines of the hub for wear, by placing the driven plate on a new gearbox primary shaft, and checking for backlash. If excessive, renew the plate.
2. Check for ridging of the friction linings, oil on the linings, or worn down to the rivets.
3. Check the pressure plate face and the flywheel for ridges. If ridged, the flywheel may be removed and refaced, but the clutch-driven plate and cover assembly must be renewed.

RELEASE BEARING

The release bearing assembly is retained to the clutch fork by two spring steel clips located into the end of the thrust pad spigots.

MASTER CYLINDER

DESCRIPTION

This unit (Fig. 3) incorporates a fluid reservoir and a master cylinder. Directly in front of the main cup (8), when the system is at rest, is a by-pass port (X) which ensures that the system is full of fluid at all times and compensates for the expansion and contraction of fluid due to changes of temperature. It also serves to release additional fluid drawn into the cylinder from the annular space formed by the reduced skirt of the piston (10) through the holes in the piston head, after each clutch application.

If this additional fluid is not released to the reservoir through the by-pass port, due either to the hole being covered by the main cup, as a result of incorrect pedal adjustment, or to the hole being choked by foreign matter, pressure will build up in the system.

In order that the rubber cup shall not be drawn into the holes in the piston head, a piston washer (9) is interposed between the two parts. *It is important that this washer be assembled as shown in Fig. 3.*

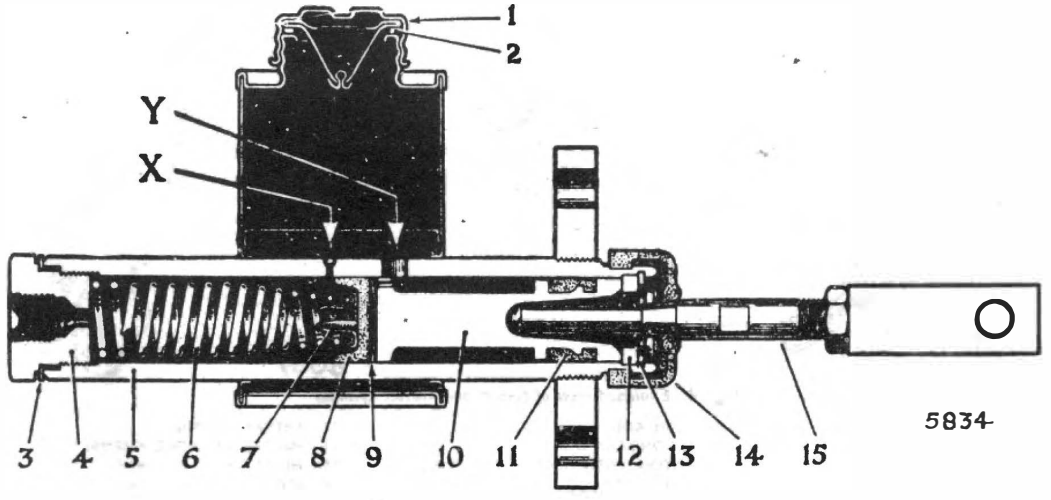

Fig. 3. *Sectional view of master cylinder*

1. FILLER CAP
2. WASHER
3. GASKET
4. OUTLET PLUG
5. BODY
6. SPRING
7. SPRING RETAINER
8. MAIN CUP
9. PISTON WASHER
10. PISTON
11. PISTON COLLAR
12. SECONDARY CUP
13. CIRCLIP
14. RUBBER BOOT
15. PUSH ROD ASSEMBLY

Y. MAIN PORT

X. BY-PASS PORT

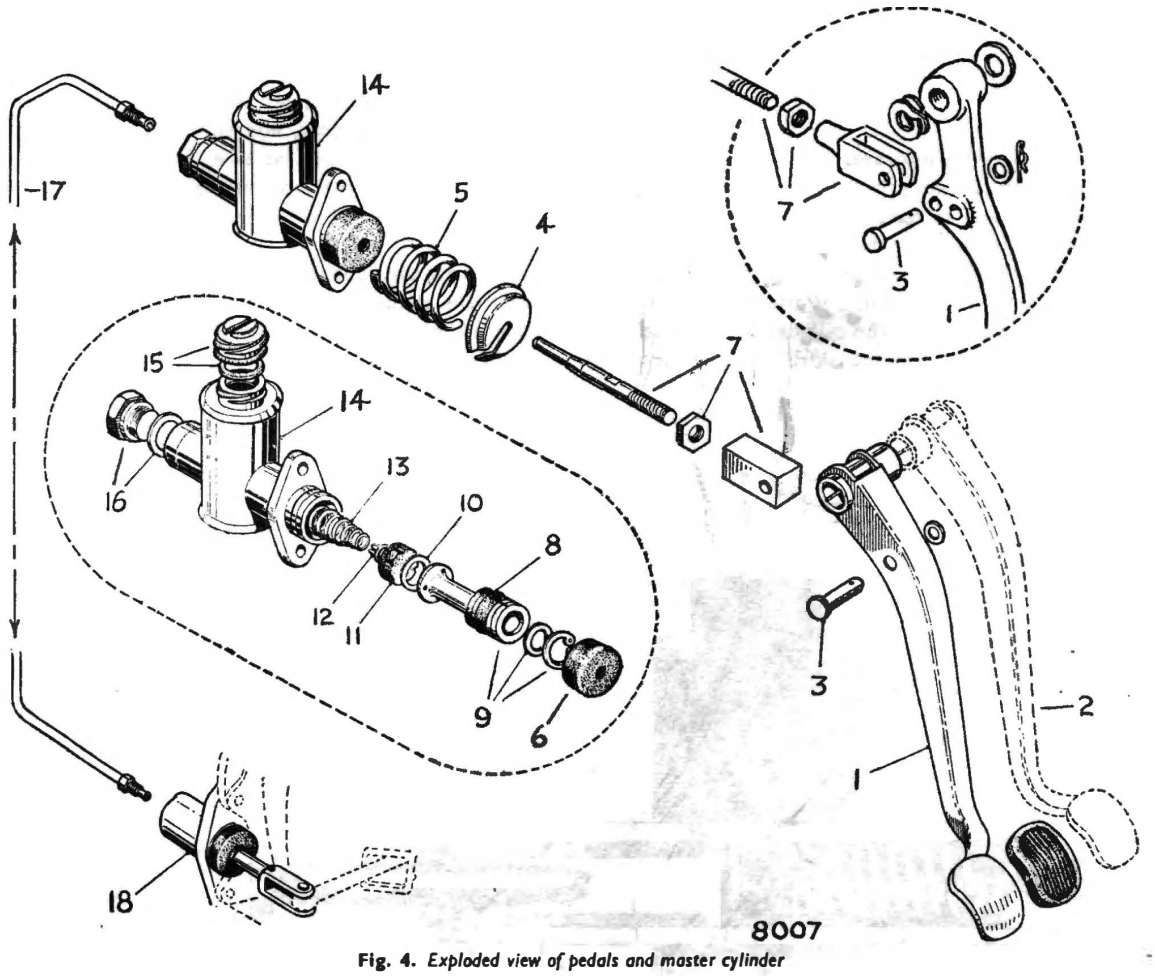

Fig. 4. *Exploded view of pedals and master cylinder*

1. CLUTCH PEDAL
2. BRAKE PEDAL
3. PIN, PUSH-ROD TO PEDAL
4. SPRING CAP } CLUTCH PEDAL
5. RETURN SPRING } CLUTCH PEDAL
6. RUBBER BOOT
7. PUSH ROD
8. SECONDARY CUP
9. PISTON WITH COLLAR AND CIRCLIP
10. PISTON WASHER
11. MAIN CUP
12. SPRING RETAINER
13. RETURN SPRING
14. MASTER CYLINDER ASSEMBLY
15. FILLER CAP AND WASHER
16. END PLUG AND GASKET
17. PIPE, MASTER CYLINDER TO SLAVE CYLINDER
18. SLAVE CYLINDER

To remove (Fig. 4)

Drain the fluid from the bleed screw on the slave cylinder (5, Fig. 6).

Disconnect the pressure pipe (17) from the cylinder barrel, and remove the rubber boot (6).

Remove the fixing bolts. The push rod (7) can be left attached to the clutch pedal.

To dismantle (Fig. 6)

Remove the circlip (9), piston collar (9), and withdraw the piston (9), washer (10), main cup (11), spring retainer (12) and return spring (3). Using only the fingers to prevent damage, remove the secondary cup (8) by stretching it over the end flange of the piston.

To assemble (Fig. 4)

Fit the secondary cup (8) to the piston (9) so that the lip of the cup faces the piston head, and gently work the cup round the groove with the fingers, to ensure that it is properly seated. Assemble the spring retainer (12) on the smaller end of the return spring (13) and insert the assembly into the cylinder. Insert the main cup (11) into the cylinder, lip foremost, taking care not to damage or turn back the lip of the cup; follow up with the piston washer (10), paying particular attention to the illustration showing the method of assembly (Fig. 5). Press the piston (9) into the cylinder, taking care not to damage or turn back the lip of the secondary cup (8). Fit the collar (9) and the circlip (9).

Fill the reservoir with clean fluid (see Section P), and test the master cylinder by pushing the piston inwards and allowing it to return unassisted; after a few applications fluid should flow from the outlet in the cylinder head.

Drain the fluid before refitting.

To refit (Fig. 5)

Fit the rubber boot (6) on to the cylinder (14) so that the vent hole in the boot is at the bottom with the cylinder fitted to the car.

Attach the master cylinder to the mounting bracket, making sure that the push rod is located in the piston, and refit the pressure pipe. Fill with fluid and bleed the system (see "Bleeding the system"). Check for leakage by applying firm pressure to the pedal, and inspecting the pipe run and connections.

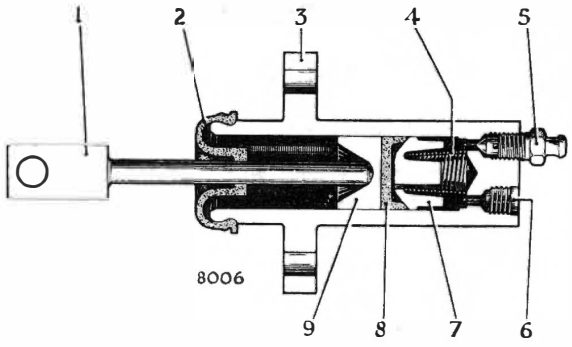

Fig. 6. *Sectional view of slave cylinder*

1. PUSH ROD
2. RUBBER BOOT
3. BODY MOUNTING FLANGE
4. RETURN SPRING
5. BLEEDER SCREW
6. FLUID OUTLET BORE
7. CUP FILLER
8. PISTON CUP
9. PISTON

SLAVE CYLINDER

DESCRIPTION (Fig. 6)

The slave or operating cylinder works on a similar principle to the hydraulic brake wheel cylinder and consists of the following parts:—

A main body or cylinder assembly, inside which operates a piston (9), rubber cup (8), cup filler (7), return spring (4), operating push rod (1) and a rubber boot (2).

A bleed screw (5) provides the only means of bleeding the system.

The operating push rod (1) is connected directly to the withdrawal lever by a clevis pin. No adjustment is necessary or provided for, between the release bearing and the release plate, as the design of the slave cylinder maintains the clutch release bearing in light contact with the release plate when the clutch is in the fully engaged position.

To remove

Drain the fluid at the bleed screw.

Disconnect the pipe (17, Fig. 5). Remove the retaining screws. The push rod may be left attached to the withdrawal lever.

To dismantle

Remove the rubber boot from the end of the cylinder.

Apply a LOW air pressure to the fluid connection to expel the internal parts.

To assemble

Fit the spring (4) in the cup filler (7) and insert these parts, spring first, into the body. Follow up with the cup (8), lip leading, making sure that the lip is not turned back or buckled, finally inserting the piston (9), flat face innermost.

Fit the rubber boot.

To refit

Offer up the slave cylinder to the mounting with the bleed screw uppermost, the push rod entering the body, and fit the fixing screws. Refit the fluid pipe, refill the master cylinder with fluid (see Section P), and bleed the system (see "Bleeding the system").

BLEEDING THE SYSTEM

As there is no check valve fitted to the clutch master cylinder, the normal bleeding procedure is not applicable—use the following recommended method:—

1. Fill the master cylinder with fluid (see Section P), and keep it at least one quarter full throughout the operation. If this is not done, air will be drawn in, necessitating a fresh start. Always top up with a new supply of fluid. (See Section P).
2. Attach a rubber tube to the bleed screw (5, Fig. 6) in the slave cylinder, allowing the free end to be submerged in a little fluid in a clean glass jar.
3. Slacken the bleed screw and depress the clutch pedal slowly. Tighten the screw before the pedal reaches the end of the stroke and allow the pedal to turn unassisted.
4. Repeat operation 3 until air bubbles cease to appear from the end of the tube in the jar.
5. During the downstroke of the pedal, tighten the bleed screw sufficiently to seat it. DO NOT use excessive force.

   Remove the bleed tube and replace the dust cap on the bleed screw.

PROPELLER SHAFT

GENERAL

A needle roller bearing propeller shaft is fitted to the car.

All bearings are sealed and do not require lubrication during the life of the component.

The sliding spline portion is enclosed within the rear end of the gearbox, and is thus lubricated by the gearbox system.

To remove and refit

Remove the nuts from the rear axle coupling.

Place a drip tray under the rear of the gearbox to catch any oil which may run out.

Pull the shaft forward to clear the rear axle coupling, then lower, and withdraw the shaft rearwards.

Before refitting, which is the reverse of the above procedure, ensure that the splines, and the outer portion of the sliding spline are free from grit or sharp edges, and lightly lubricated.

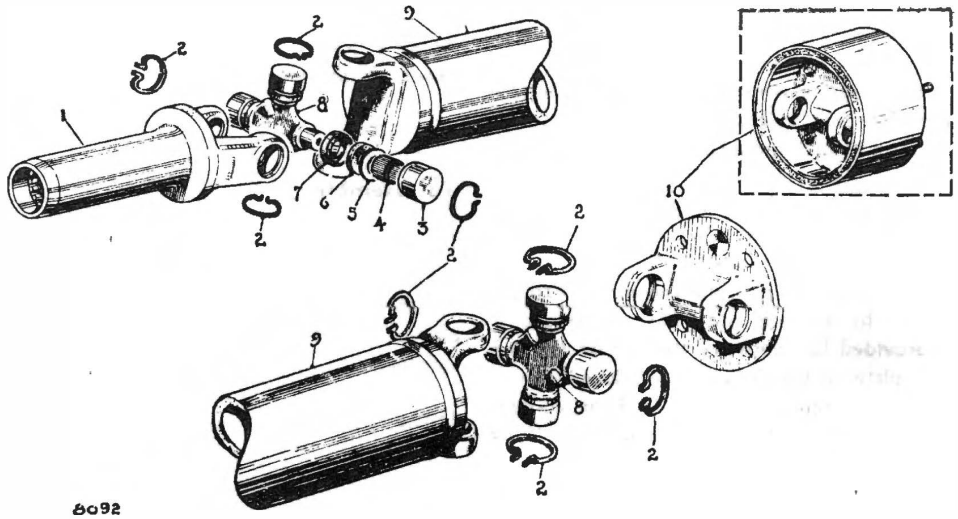

Fig. 7. *Exploded view of propeller shaft*

1. SLEEVE YOKE
2. SNAP RING
3. BEARING CAP
4. NEEDLE ROLLERS
5. GREASE RETAINER
6. GASKET
7. GASKET RETAINER
8. JOURNAL
9. PROPELLER SHAFT
10. COUPLING FLANGE (ALTERNATIVES)

UNIVERSAL JOINTS

The needle bearing universal joints are so designed that correct assembly is a very simple matter, no hand fitting or special tools being required.

Individual parts of any needle roller bearing assembly should not be renewed singly. If replacement is necessary a complete journal pack should be fitted. In certain territories where journal packs are not available, overhaul procedure will have to be carried out. The complete dismantling and reassembly procedure is given below:—

To dismantle

Mark the couplings, and reassemble to the marks.

Remove snap rings by pinching together with pliers. If the ring is stiff to remove, clean out any surplus enamel, and tap the end of the bearing assembly lightly, which will relieve pressure on the ring.

Holding the joint in one hand, tap gently with a soft hammer on the radius of the ear of the yoke.

The needle bearing assembly will gradually emerge, and can be removed with the fingers. Be sure to hold the assembly vertical and remove the roller bearing from the bottom, to avoid dropping the needle rollers.

Repeat this operation for the opposite bearing.

Support the exposed journal pegs on lead blocks (to protect the ground face), and tap the ears of the flange yoke to remove the needle roller assembly.

Reverse the propeller shaft assembly and repeat the operation.

Wash all parts in petrol or paraffin.

It is essential that no play exists between the roller races and the bores of the yokes. If the yoke cross-holes have worn oval, the yokes must be replaced.

In the case of the inner yokes, renewal can only be effected by renewing the propeller shaft, since the yokes are welded to, and balanced with, the tubular shaft.

If parts are not worn, repack with Retinax "A". With the rollers in position fill the race about one third full.

Install all new gaskets and seals on the journal assembly.

The journal shoulders should be coated with jointing compound to ensure a good seal.

To reassemble

Insert journal in flange yoke holes. Using a soft round drift, about $\frac{1}{32}$ in. (·8 mm.) smaller in diameter than the hole in the yoke, tap the bearing assembly into position.

Repeat this operation for the other three assemblies.

Fit new snap rings, and make sure they are seated in the grooves.

When assembled, tap lightly all round to relieve any pressure on the bearing assemblies.

OVERDRIVE

SECTION E.1

CONTENTS

	Page
FAULT FINDING CHART ...	14
GEARBOX AND OVERDRIVE UNITS	
—To remove ...	7
GENERAL DESCRIPTION	
—Control of overdrive	4
—Hydraulic system ...	2
—Lubrication and maintenance	4
—To release hydraulic pressure	4
—Working principles	2
OPERATING VALVE ...	6
OPERATION AND ADJUSTMENT OF CONTROLS	
—To check operation of non-cancelling overdrive switch	4
—To check operation of self-cancelling overdrive switch	5
—Isolator switch adjustment	6
—Solenoid adjustment	5
OVERDRIVE UNIT	
—Dimensions and tolerances	15
—To remove from car	8
—To refit	10
—To dismantle	10
—Inspection	11
—Reassembling unit	12
PUMP VALVE	7
RELIEF VALVE	7
TESTING OIL PRESSURE	6

OVERDRIVE

GENERAL DESCRIPTION

Working principles

The Laycock-de-Normanville D type Overdrive gives an increase in propeller shaft speed of 24·67%, that is, it has a ratio of ·802 : 1.

At the top of Fig. 1 the unit is shown in direct drive. The cone clutch which is fixed to an extension of the sun-wheel, is held to the rear by spring pressure so that the inner friction band contacts the outside of the annulus. This locks the gear train and the drive is transmitted directly through the uni-directional clutch. Any over-run or reverse torque is taken by the cone clutch.

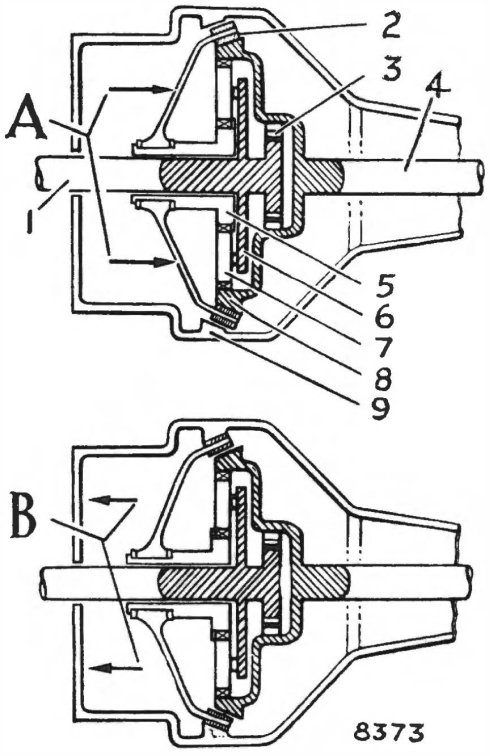

A. SPRING PRESSURE
1. INPUT SHAFT
2. CONE CLUTCH
3. UNI-DIRECTIONAL CLUTCH
4. OUTPUT SHAFT
5. SUN WHEEL
6. PLANET CARRIER
7. PLANET WHEEL
8. ANNULUS
9. BRAKE RING
B. HYDRAULIC PRESSURE

Fig. 1. *Diagrammatic sections*

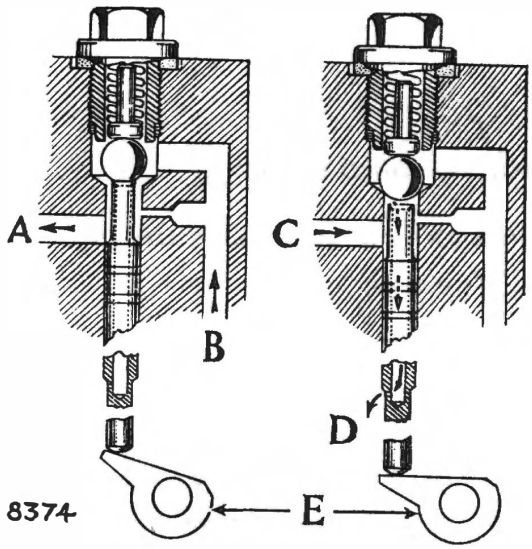

A. TO CYLINDERS
B. FROM PUMP
C. FROM CYLINDERS
D. TO SUMP
E. OPERATING LEVER

Fig. 2. *Operating valve*

The hydraulic system (Fig. 2)

A cam, keyed to the gearbox mainshaft operates the plunger of a pump which forces oil via its discharge valve into the relief valve. This relief valve is used to keep the line pressure constant. Oil from the relief valve is also directed via drillings in the casing and input (gearbox) shaft, to the planet wheels.

From the pump, oil under pressure is passed to the operating cylinders via the operating valve, shown diagrammatically in Fig. 2.

The lower illustration in Fig. 1 shows the unit in over-drive. The cone clutch is held forward by hydraulic pressure, so that the outer friction band of the clutch is locked to the stationary brake ring. As the cone clutch is splined to the sun wheel, the sunwheel is also held stationary.

The planet carrier is driven by, and splined to, the input shaft. The planet wheels are thus driven round the stationary sunwheel, and in so doing rotate the annulus and tail shaft at a speed greater than that of the input shaft.

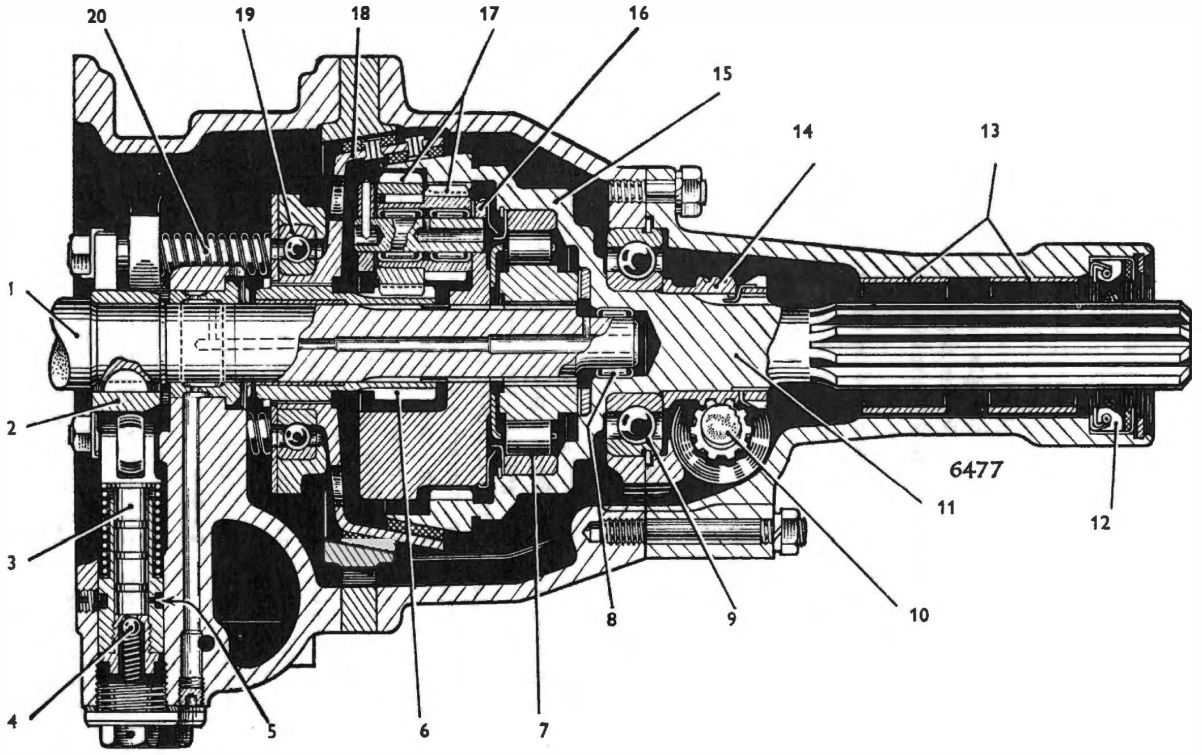

1. INPUT SHAFT
2. PUMP CAM
3. OIL PUMP
4. PUMP VALVE
5. PUMP INLET
6. SUNWHEEL
7. UNI-DIRECTIONAL CLUTCH (SPLINED TO INPUT SHAFT)
8. SPIGOT BEARING
9. REAR BEARING
10. SPEEDOMETER PINION
11. OUTPUT SHAFT (INTEGRAL WITH ANNULUS)
12. OIL SEAL
13. SUPPORT BUSHES
14. SPEEDOMETER WHEEL
15. ANNULUS
16. PLANET CARRIER
17. PLANET WHEEL
18. CONE CLUTCH
19. CLUTCH THRUST BEARING
20. CLUTCH SPRING

Fig. 3. *Sectional view of overdrive*

When the overdrive control is operated the valve is lifted, holding the ball off its seat against the plunger spring. Oil then passes to the operating cylinders, forcing the pistons forward.

When the overdrive control is moved to the disengaged position, the spring-loaded plunger pushes the ball on to the seat, and the valve falls away from the ball. Oil from the cylinders then returns through the centre of the valve to the sump.

Near the bottom of the valve is a small orifice, which slows down the emptying of the cylinders, and provides smooth re-engagement of direct drive.

Control of overdrive

The overdrive is actuated by a solenoid controlled by a switch on the steering column. An isolator switch situated in the top cover of the gearbox ensures that overdrive can only be obtained in third or top gear. Both these switches are connected to the operating coil of a relay, and the solenoid is energised through the relay contacts.

Lubrication and maintenance

The oil in the overdrive unit is common with that in the synchromesh gearbox, and the level should be checked at the gearbox. To drain the gearbox and overdrive units, the gearbox and overdrive drain plugs must be removed.

The overdrive drain plug is the one nearest the left side of the unit. The pump valve plug in the centre, and the relief valve plug on the right, are wired together, and are not to be removed, unless attention to the valves is required.

It is essential that only the approved lubricant be used when refilling. Proprietary additives must not be used. Trouble may be experienced if some types of extreme pressure lubricants are used, because the planets act as a centrifuge and separate the additives from the oil.

The combined capacity of synchromesh gearbox and overdrive is 4½ pints (5·4 U.S. pints; 2·5 litres). If the units have been drained, and refilled, the oil level must be checked after the car has been run, since a certain amount of oil will be retained in the hydraulic system.

It must be emphasised that any hydraulically controlled transmission must have clean oil at all times, and great care must be taken to avoid entry of dirt if any part of the case is opened. This applies to adding oil to the gearbox, and servicing the unit. Any dirt, even lint from a cloth that finds its way into a valve, may cause serious difficulty.

When the unit is dismantled for any service work the parts must be thoroughly cleaned, and kept covered with an oily lintless cloth until reassembled. Similar care must be taken when handling the hydraulic pistons, valves, etc., since scratches, nicks or bruises can cause leakage and consequent failure on reassembly.

When positioning the vehicle for the removal of the overdrive, care must be taken that the vehicle is NOT brought to a halt by stalling in gear.

When transmitting torque in forward direct drive, the rollers of the uni-directional clutch are forced towards the crest of the facets on the inner member. If the vehicle is brought to a halt by stalling in gear, these rollers can lock in the drive position, thereby preventing the removal of the overdrive unit.

To release hydraulic pressure

Before commencing any dismantling operations, it is imperative that, with the engine stopped, ignition on, and top gear engaged, the overdrive switch is operated ten or twelve times to release the hydraulic pressure from the system.

OPERATION AND ADJUSTMENT OF CONTROLS

Reference to Figs. 4A and B shows that the relay can only be energised from A3 when the isolator switch on the gearbox top cover is closed and the overdrive switch is moved to the overdrive position. From then on, operation varies due to different circuit design, but in both cases the isolator switch must permit selection and maintenance of overdrive in third and top gears and positively prevent selection in 1st, 2nd and reverse gears. If at anytime overdrive does not disengage the car must not be "reversed", the penalty would be serious damage to the overdrive unit.

To check operation of non-cancelling overdrive switch

Switch on ignition, do not start engine.
Select 3rd or top gear.

Move overdrive selector switch to overdrive. As the switch closes a distinct "click" should be heard as the relay is energised.

Leaving overdrive selected, move the gear lever to first or second gear. As the lever enters the neutral gate the isolator switch should open. This will be indicated by another "click" from the relay as it is de-energised.

The isolator switch MUST be fully open when the gear lever is in the 1st/2nd gear plane. With 1st or 2nd gear

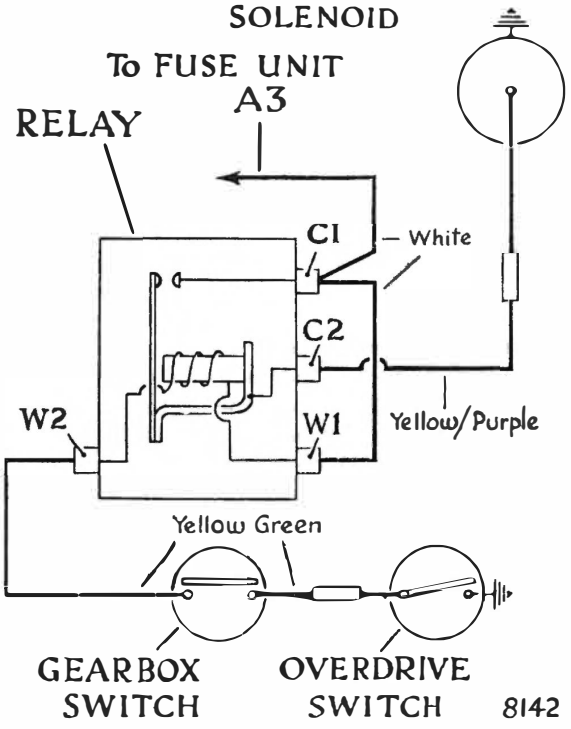

Fig. 4A. *Overdrive circuit diagram Non-cancelling switch*

and overdrive still selected, put a bias on gear lever towards 3rd and top gear plane. The circuit MUST remain dead. (NO "click").

Road test to confirm that overdrive will engage and remain engaged in 3rd and top gear when selected. Also that overdrive cannot be selected in 1st or 2nd gear.

To check operation of self-cancelling overdrive switch

Switch on ignition, do not start engine.

Select third or top gear.

Move overdrive selector switch to overdrive position As the switch closes a distinct "click" should be heard as the relay is energised. The selector lever will spring back to the central position when released, but the relay will remain energised via the second pair of contacts within the relay, the circuit being C2 *to* contacts *to* C4 *to* W2 *to* relay coil *to* resistance *to* earth. (See Fig. 4B).

Move the gear lever to 1st or 2nd gear, as the gear lever enters the neutral gate the isolator switch should open. This will be indicated by another "click" from the relay as it is de-energised.

The isolator switch must be fully open when the gear lever is in the 1st/2nd plane. With the lever in 1st and

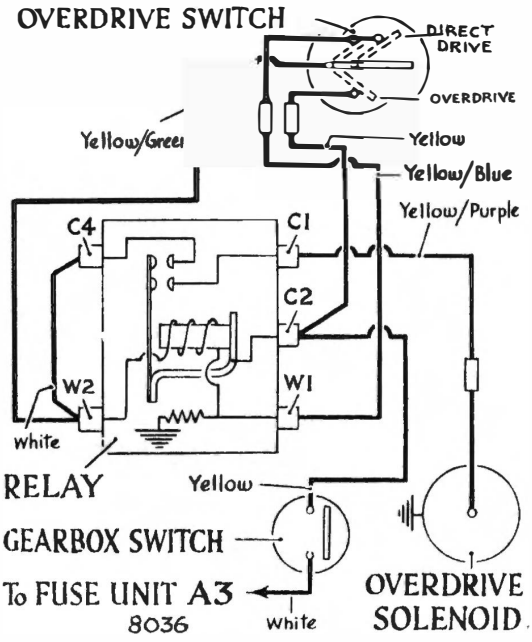

Fig. 4B. *Overdrive circuit diagram Self-cancelling switch*

then 2nd gear, in each case biased towards the 3rd/4th plane, try and select overdrive. The circuit MUST remain dead. (NO "click").

Road test to confirm that overdrive will engage and remain engaged in 3rd and top gear, when selected. Also that overdrive cannot be selected in 1st or 2nd gear.

When direct drive is selected, with the unit in overdrive, the circuit operates as follows. (See Fig. 4B).

The overdrive switch (direct drive position) short circuits the relay coil, so the contacts open and the solenoid is de-energised.

Solenoid adjustment

Remove the cover plate over the operating lever, this is situated on the right-hand side of the unit and is accessible from under the car. Switch the ignition on, engage top gear, and select overdrive on the switch. If the control is operating correctly, a $\frac{3}{16}$ in. (4·7 mm.) diameter rod can be passed through the hole in the lever into the hole in the overdrive casing. If the solenoid operates, but does not move the setting lever far enough for the rod to be inserted, the solenoid plunger must be adjusted. Adjustment is effected by first switching off the ignition, push the plunger into the solenoid as far as it will go, hold the plunger with a spanner by the flats provided, and with the $\frac{3}{16}$ in. (4·7 mm.) diameter rod in position, the adjusting nut must just contact the fork.

Ensure that when the control is operated by the switch, the rod can be inserted.

Check that the solenoid current does not exceed 2 amperes. If the current is maintained in the order 15 to 17 amperes, it is an indication that the solenoid plunger is not moving far enough to change from the operating to the holding coil, and the plunger must be adjusted. This is important as continued high amperage will cause solenoid failure.

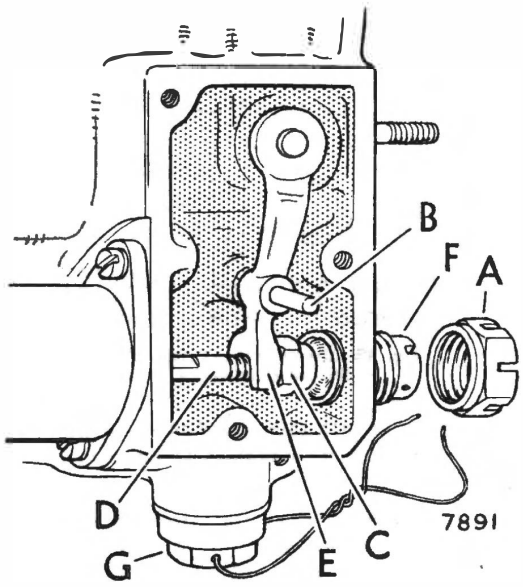

Fig. 5. *Stop pad adjustment*

If the solenoid does not operate, check the electrical circuits, circuit diagrams are given in Figs. 4A and 4B. If, after checking, the solenoid still fails to operate, replace the solenoid, reset the controls and re-test.

When the control is operating satisfactorily, release the locknut (A), Fig. 5.

With the $\frac{3}{16}$ in. (4·7 mm.) diameter rod (B) in position, and the adjusting nut (C) on the solenoid plunger (D) touching the fork (E), screw in the stop pad (F) until the inner face of the recess in the pad (F) makes contact with the end of the solenoid plunger (D).

Then screw the stop pad (F) back three full turns.

When correctly set, the clearance between the end of the solenoid plunger (D) and the inner face of the recess in the stop pad (F) should be ·150 in. (3·8 mm.).

By following the method given here, the clearance is correct, without the need to take measurements.

Finally, tighten the locknut (A) and secure by wire locking to the relief valve plug (G), and replace the cover plate.

Isolator switch adjustment

Remove rubber cover from isolator switch and disconnect leads.

Unscrew switch from gearbox top cover and remove shims. Screw switch in and out of top cover to obtain the desired setting. When the correct position is obtained, measure with feelers, the gap between the switch lead and the top cover face.

Insert shims to the thickness required and tighten the switch.

The required shims are obtainable under Part No. P.112542. To check the setting, carry out the test given under the heading "To check operation of non-cancelling self-cancelling overdrive switch"

TESTING OIL PRESSURE

Release the hydraulic pressure as previously described.

Remove the operating valve plug, and fit in its place the special adaptor V.L.C. L.188, comprising the adaptor, hose and pressure gauge.

Jack up the rear wheels of the car, start the engine and engage overdrive top gear, with the engine ticking over.

The pressure recorded on the gauge should be 480—500 lbs. in^2 (33·75—35·15 kg.cm^2).

THE OPERATING VALVE (Fig. 2)

To gain access to the operating valve remove the rear cover plate from the floor centre.

Release the hydraulic pressure as previously described.

Remove valve plug, take out plunger and spring, and remove the ball with a magnet.

The valve can be removed with a tapered piece of wood, but care must be exercised to avoid damage to the seating at the top of the valve.

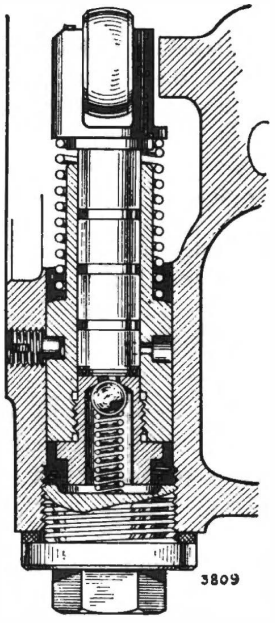

Fig. 6. *Oil pump and valve*

Near the bottom of the valve will be seen a small hole breaking through to the centre drilling. This is the jet for restricting the exhaust of oil from the operating cylinders. Make sure this jet is not blocked.

If the operating valve is satisfactory and the unit fails to operate, check that the pump is functioning correctly.

Jack up the rear wheels of the car, then with the engine ticking over, and the valve plug removed, engage top gear. Watch for oil being pumped into the chamber. If the oil level is correct but none appears in the chamber, then the pump is not functioning.

Check the relief valve and the pump valve.

THE RELIEF VALVE

Access to the relief valve is gained through a plug in the bottom of the main casing (see Fig. 7).

To dismantle

Release the hydraulic pressure as previously described. Remove the drain plug and drain off oil.

Remove the valve plug. This will release the valve spring and plunger.

Remove the valve body.

Inspect the "O" ring spring and plunger, etc., for damage. The plunger should be a sliding fit in the valve body.

THE PUMP VALVE (Fig 6)

Access to the pump valve is obtained through the centre plug in the bottom of the main casing. (Fig. 7).

To dismantle

Release hydraulic pressure as previously described.

Remove the drain plug and drain off oil.

Unscrew the valve cap and take out the spring and ball. Ensure that the soft copper washer between the valve cap and pump housing is nipped tightly to prevent oil leakage.

Always renew the washer.

DO NOT FORGET TO REFILL GEARBOX WITH OIL AND CHECK THE LEVEL AFTER RUNNING THE CAR.

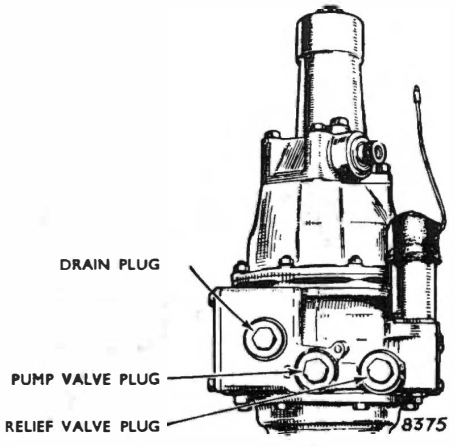

Fig. 7. *Drain and valve plugs*

GEARBOX AND OVERDRIVE UNITS

To remove

To remove gearbox and overdrive units as an assembly, proceed as detailed in "GEARBOX—To remove, Section E (Gearbox)."

The unit is split at the adaptor plate, which is attached to the gearbox by eight $\frac{5}{16}$ in. (7·9 mm.) studs. The overdrive unit can be drawn off the mainshaft, leaving the adaptor plate in position on the gearbox.

OVERDRIVE UNIT

To remove

The overdrive unit can be removed from the car as a separate assembly.

If it is necessary to remove the overdrive unit only from the car, proceed as follows:—

Place the car on a lift or over a pit.

Release the hydraulic pressure as previously described. Drain the oil from the unit.

Remove the propeller shaft rear coupling nuts, push the shaft forward slightly to clear the differential flange, and remove the shaft rearwards and downwards.

Remove the speedometer drive.

Disconnect the wire to the solenoid (snap connector at solenoid).

Remove rear cover from gearbox tunnel.

For cars fitted with console

Unscrew the gear lever knob. Remove screw securing the console panel at the rear and lift the panel, disengaging the two locating pegs at the front.

Disconnect the wires at the Lucar connections behind the switches. (Note the wire colour and position).

Remove the four nuts securing the console body and disconnect the two heater hoses.

Remove the console body.

All models

Remove the eight nuts securing the overdrive to the adaptor plate.

The unit can be withdrawn rearwards off the mainshaft.

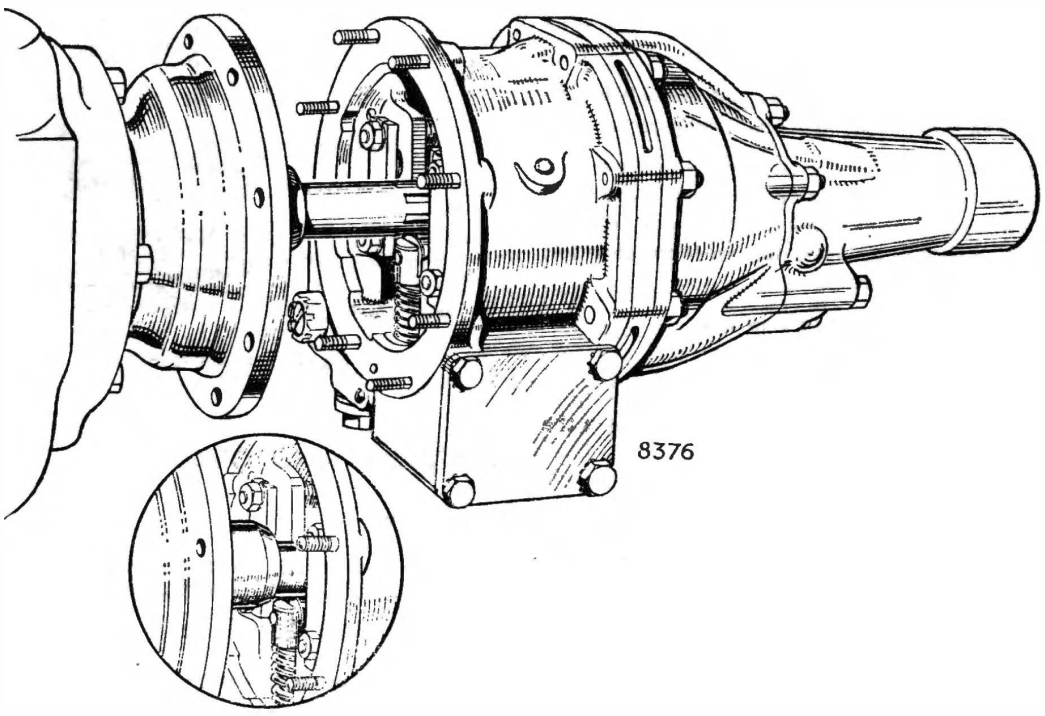

Fig. 8. *Overdrive ready for fitting to gearbox*

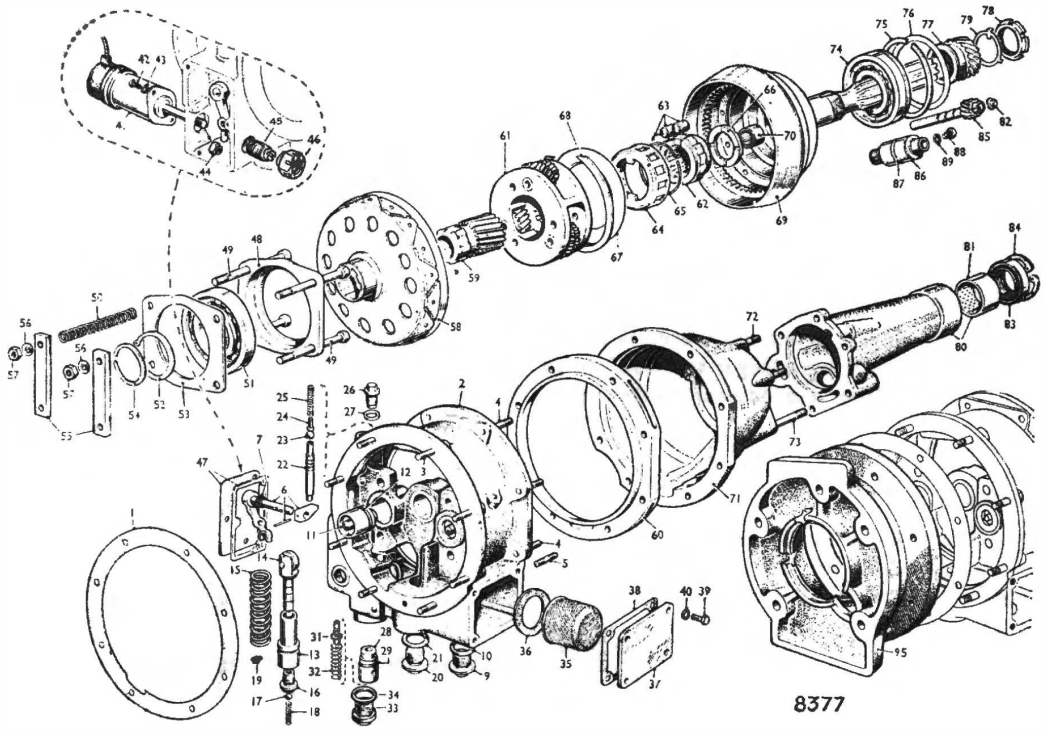

Fig. 9. *Exploded view of overdrive*

1. JOINT—OVERDRIVE TO GEARBOX ADAPTOR
2. FRONT CASING
3. STUD—OVERDRIVE TO GEARBOX ADAPTOR
4. STUD—FRONT CASING TO BRAKE RING AND REAR CASING
5. STUD—FRONT CASING TO BRAKE RING AND REAR CASING
6. OPERATING LEVER ASSEMBLY
7. SEATING RING—OPERATING SHAFT
8. PLUG
9. DRAIN PLUG
10. DRAIN PLUG WASHER
11. OPERATING PISTON
12. PISTON RING (RUBBER)
13. PUMP BODY
14. PLUNGER
15. PLUNGER SPRING
16. VALVE BODY
17. BALL } PUMP OPERATING
18. SPRING }
19. PUMP BODY RETAINING SCREW
20. COVER PLUG } PUMP
21. COVER PLUG WASHER }
22. OPERATING VALVE
23. BALL
24. PLUNGER
25. SPRING } OPERATING VALVE
26. PLUG
27. WASHER
28. RELIEF VALVE BODY
29. RUBBER RING
31. PLUNGER
32. SPRING } RELIEF VALVE
33. PLUG
34. WASHER
35. FILTER
36. RUBBER JOINT—FILTER
37. FILTER COVER PLATE
38. FILTER COVER PLATE GASKET
39. SET-SCREW SECURING FILTER COVER PLATE
40. WASHER
41. SOLENOID AND JOINT TO CASING
42. SET-SCREW—SOLENOID TO CASING
43. WASHER
44. NUT—SOLENOID TO VALVE LEVER
45. STOP PAD } SOLENOID AND VALVE
46. LOCKNUT } LEVER ADJUSTMENT
47. VALVE LEVER COVER
48. BEARING HOUSING
49. PIN
50. SPRING
51. BEARING } CLUTCH RELEASE
52. CIRCLIP
53. RETAINER PLATE
54. SNAP RING
55. BRIDGE PLATE } CLUTCH RELEASE
56. TAB WASHER
57. NUT
58. CLUTCH CONE
59. SUN WHEEL
60. BRAKE RING
61. PLANET CARRIER WITH WHEELS
62. RATCHET
63. ROLLERS } FREE WHEEL
64. ROLLER CAGE
65. CIRCLIP
66. THRUST WASHER
67. RETAINING PLATE
68. CIRCLIP
69. ANNULUS
70. MAINSHAFT BEARING
71. REAR CASING
72. STUD—REAR CASING TO REAR COVER
73. STUD—REAR CASING TO REAR COVER
74. REAR BEARING
75. CIRCLIP
76. SHIM
77. SPEEDOMETER WHEEL
78. LOCKNUT
79. TABWASHER
80. REAR COVER
81. BUSH
82. THRUST BUTTON, SPEEDOMETER PINION
83. REAR OIL SEAL
84. CIRCLIP
85. SPEEDOMETER PINION
86. BEARING
87. OIL SEAL
88. LOCKING SCREW
89. WASHER
95. GEARBOX ADAPTOR

To refit

Before the overdrive is fitted to the gearbox, the splines of the planet carrier and uni-directional clutch must be in line.

Turn the bottom set of splines anti-clockwise into alignment using a long screwdriver.

Turn the gearbox mainshaft until the highest point on the lobe of the pump cam faces upwards. The lowest point will then coincide with the overdrive pump plunger (Fig. 8, inset).

The two splines and the pump cam will now be lined up correctly, and it is most important that neither the gearbox mainshaft, nor the overdrive coupling driver is turned until the unit is fitted to the gearbox.

The edge of the pump cam, facing the overdrive unit is chamfered to enable the pump plunger to "ride" on to the cam as the overdrive and adaptor flanges come together.

To dismantle

Assuming that the adaptor plate has been retained on the gearbox as previously described, dismantle the overdrive in the following order, front end uppermost:—

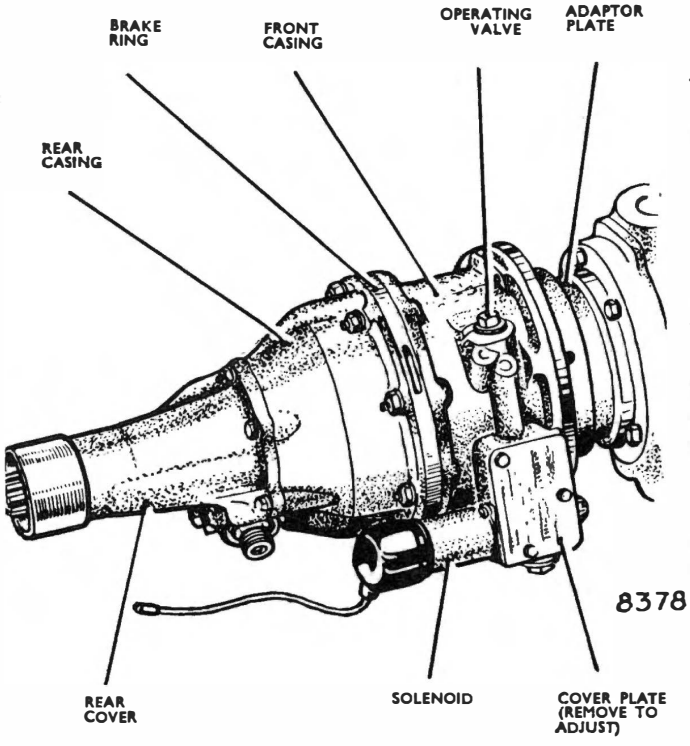

Fig. 10. *Side view of unit*

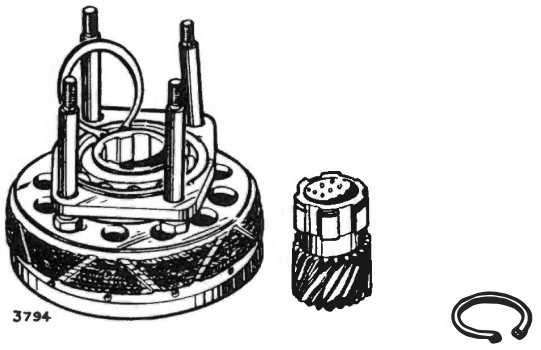

Fig. 11. *Cone clutch and sunwheel details*

Remove the operating valve as described under the heading "The Operating Valve".

This will allow air to enter the cylinders of the operating pistons and facilitate removal of these pistons.

To remove the oil pump (rarely necessary) unscrew the valve seat in the valve orifice using V.L.C. key L.213A.

Remove the body retaining screw. Screw V.L.C. Tool L183A and L183A-2 into the pump body and withdraw the body. This will release the plunger and spring.

Remove the cover over operating lever.

Remove the two screws securing solenoid to casing, ease plunger out of operating lever yoke and remove solenoid.

Release the lockwashers securing the four nuts retaining the operating piston bridge pieces.

Remove the nuts, lockwashers and bridge pieces and withdraw the operating pistons by gripping their spigots with pliers.

Loosen and remove progressively the eight nuts around the centre flange of the casing. This will gradually release the four clutch springs. Remove front half of casing complete with brake ring. Withdraw the four clutch springs from their pegs on the thrust plate.

The brake ring is spigoted into each half and will normally come away with the front half of the casing. A few light taps with a mallet around its flange will remove the ring from the rear casing.

Lift out the clutch sliding member complete with the thrust bearing and sunwheel. If the cone clutch sticks in the brake ring, a light tap with a mallet on the rear end of the casing will free it.

Remove the sunwheel from the sliding cone clutch member, by withdrawing the sunwheel circlip from the forward end of the sunwheel hub.

Remove the thrust bearing and the thrust plate by withdrawing the large circlip and pressing out the cone clutch hub from the thrust plate and bearing.

Remove bearing from thrust plate assembly.

Remove planet carrier assembly.

It may be necessary to remove the roller clutch:—

Remove circlip and brass locating ring from the recess in front of the clutch.

Place fitting ring V.L.C. Tool No. L.178 centrally over the front of the annulus and lift the inner member of the uni-directional clutch into it. This will ensure that the rollers are not displaced.

Remove the fitting ring and place the parts into a suitable container.

Remove the spring ring located between the hub and the cage.

Remove the bronze thrust washer fitted between the clutch inner member and the front face of the annulus.

A caged needle roller bearing is fitted in the annulus centre spigot. Remove hydraulically using V.L.C. Tool No. L.209 and thick grease.

Remove the speedo drive pinion and bush, located by one dowel screw.

Remove the rear oil seal (if necessary) using V.L.C. Tool No. 7657 and L.204B.

To remove the annulus, first remove tailshaft casing, remove the circlip around rear ball bearing and remove annulus and bearing by driving out forwards.

To remove rear bearing disengage lockwasher, remove ring nut securing speedo drive gear and rear bearing with V.L.C. Tool No. L211, and remove the gear.

Using V.L.C. Tool No. L.187 and RG.4221B, draw off the bearing.

Inspection

When the unit is dismantled, thoroughly clean every item and inspect.

New part dimensions are given at the end of this section, but are only provided as a guide. Check all casings for cracks or damage.

Examine the cylinder bores for scores or wear. Check for leaks at the plugged ends of passages. Examine the clutch sliding member assembly.

Check that the clutch linings are not burnt or worn.

Check the bolts locating the clutch springs and bridge pieces for distortion. Check all bearings for wear, pitting and flat spots on the balls.

Check all gear teeth for wear or damage.

Check the sunwheel bush. If worn, the complete gear will have to be replaced since it is not possible to replace the bush, as it has to be bored to the pitch line of the teeth.

Inspect the face of the sunwheel thrust ring. Replace only if deeply scored, as it is only subject to sunwheel rotation, while the overdrive is actually being engaged.

Examine the uni-directional clutch for chipped rollers and see that the inner and outer members are free from damage. Ensure that the spring is free from distortion.

Check the tailshaft splines for wear or damage.

See that all oil holes are open and clean.

Inspect the oil pump for wear on the pump plunger and roller pin. Ensure the plunger spring is not distorted.

Inspect the valve seat and ball for wear or damage.

Check the operating valve for distortion or damage and ensure that it slides easily in the bore in the front casing.

Inspect the relief valve body, "O" ring and plunger.

Reassembling the unit

Fit rear bearing, circlip groove uppermost, over the output shaft, driving the bearing into position against the locating shoulder behind the annulus, using V.L.C. Tool No. L.186.

Fit speedo gear, lockwasher and nut.

Fit the annulus assembly into the rear casing and fit the circlip into the bearing outer track.

Ensure that the rear bearing circlip is located against the rear face of the casing.

The rear bearing is located at the rear end by the tailshaft cover, and a shim is inserted into the recess of the cover to ensure that the bearing is trapped.

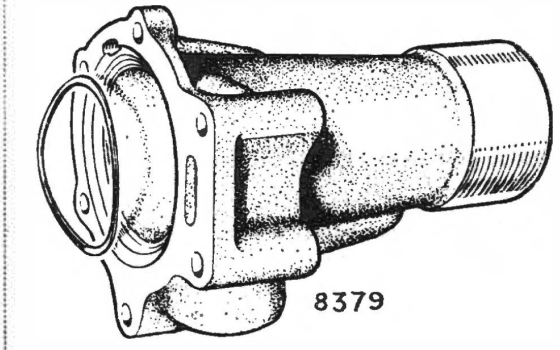

Fig. 12. *Rear cover and bearing shims*

If a new bearing is fitted, it will be necessary to assess the thickness of shims required.

Place two or more shims into the rear cover recess and offer up the rear cover to the casing, with the bearing and circlip installed.

Measure with feeler gauges the amount of gap between the cover and the casing.

Remove the cover, measure the thickness of shims inserted and subtract the width of the gap from the thickness of the shims. This will give the actual shimming required.

Fit the rear cover to the casing and insert the speedo drive bush and pinion.

If the spigot roller bearing in the centre of the annulus is to be replaced, use V.L.C. Tool No. L.209 to insert bearing.

Assemble the spring into the roller cage of the unidirectional clutch.

Fit the inner member into the cage and engage it on the other end of the spring.

Engage the slots in the inner member with the tongues on the roller cage and see that the spring rotates the cage to urge the rollers up the ramps of the inner member. The cage is spring-loaded anti-clockwise when viewed from the front.

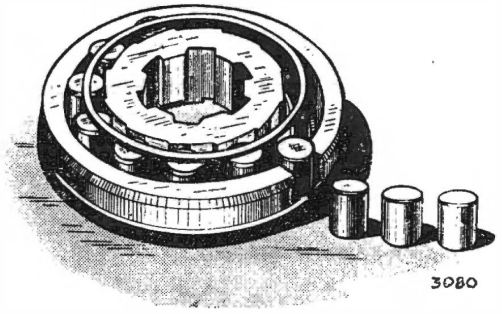

Fig. 13. *Assembling roller clutch*

Place this assembly front end downwards, into the fitting ring, V.L.C. L.178, and fit the rollers through the slots in the tool, turning the clutch clockwise.

Replace the thrust washer and uni-directional clutch inner member, complete with rollers, cage and spring into the outer member, using V.L.C. L.178, to enter the rollers into the outer member.

Fit the brass protector ring into the groove in front of the roller clutch assembly. Fit circlip into recess to hold the brass ring in position.

Position the gears in the planet carrier. *Rotate the planet gears until the etched lines on the gears and carrier coincide. It is imperative that this is done accurately.* The pop marks on the gears are datum marks and must be ignored for the purposes of assembly. Insert the sun wheel and re-check the etched lines for alignment. Position the assembly within the annulus and remove the sunwheel.

Pass the sunwheel splines into the open ends of the cone clutch member, and fit the smaller circlip at the forward end of the sunwheel.

Fit the clutch bearing into the thrust plate, and drive home using a brass drift, fit the four bolts of the thrust ring, and then fit the clutch bearing assembly into the forward end of the cone clutch hub, securing the assembly with the large circlip on the hub.

Fit the clutch assembly complete with sunwheel into the casing engaging the sun and planet wheels.

Fit the spacer plate over the bolts of the thrust ring bearing assembly and fit the four springs. Fit the front casing with the brake ring (large end of the taper towards the rear casing).

Coat the front and rear faces of the brake ring with jointing compound.

Carefully position the brake ring on the front casing studs, then position rear casing.

The clutch spring pressure will now be felt as the two halves of the casing go together and it will be necessary to push the front half towards the rear half in order to start the nuts on the studs.

When all the nuts are well started, tighten up evenly and diagonally.

Ensure that the two halves of the casing go together easily and check that the clutch spring bolts are not binding in the holes.

Fit the two operating pistons, carefully easing the "O" rings into the cylinder bores.

The centre spigots of the pistons face the front of the unit.

Fit the two bridge pieces, nuts and lockwashers.

Fit the solenoid plunger to the operating lever arm before installing the operating valve and spring; then fit the solenoid.

Fit the operating valve assembly, ensuring that the lower operating plunger engages with the cam on the operating shaft.

If the pump body has been removed, insert the small end into the middle plug orifice in the bottom of the casing, with the oil inlet port in the annulus groove of the body facing the matching port in the main casing. Insert the pump plunger and spring from above.

Gently tap the body into position, using the stem of V.L.C. Tool No. L.183A-2, until the groove lines up with the grub screw hole at the bottom of the casing front face. Fit the grub screw and tighten.

Fit pump valve seat, ball and spring. Fit cap and washer.

Fit the relief valve assembly and plug into the right-hand bottom position in the casing.

Fit and secure filter side cover plate.

Do not yet fit the operating lever cover plate, as it will be necessary to adjust the lever after fitting the unit to the car (see page 4).

Refit the unit to the gearbox.

FAULT FINDING CHART

Overdrive does not engage	Always check and test solenoid first. Control mechanism out of adjustment. Insufficient oil in gearbox. Insufficient hydraulic pressure due to leaks or faulty relief valve—Test pressure. Leaking operating valve due to foreign matter on ball valve seat or broken valve spring. Leaking pump non-return valve due to foreign matter on ball seat or broken valve spring. Pump not working due to choked filter, or broken pump spring. Damaged gears, bearings or moving parts within the unit, requiring removal and inspection of the assembly.
Overdrive does not release	THIS CALLS FOR IMMEDIATE ATTENTION. DO NOT REVERSE, AS SELECTION OF REVERSE IN OVERDRIVE CAN CAUSE EXTENSIVE DAMAGE. Fault in electrical circuit. Control mechanism out of adjustment. Blocked restrictor jet in valve. Sticking clutch. Incorrect adjustment of solenoid stop. Damaged parts within the unit requiring removal and inspection of the assembly.
Clutch slip in overdrive	Insufficient oil in gearbox. Control mechanism out of adjustment. Insufficient hydraulic pressure due to leaks, or foreign matter in valves. Worn or carbonised clutch linings.
Clutch slip in reverse or free-wheel condition on over-run	Control mechanism out of adjustment. Worn or carbonised clutch linings. Blocked restrictor jet in valve. Insufficient pressure on clutch due to broken clutch springs. Incorrect adjustment of solenoid stop.

OVERDRIVE UNIT—DIMENSIONS AND TOLERANCES

Parts and Description	*Dimensions New*		*Clearance New*
Pump			
Plunger diameter	$\frac{3}{8}$ in.—·0004 in. —·0008 in.	9·525—·010 mm. —·020 mm.	
Bore for plunger in pump body ...	$\frac{3}{8}$ in.+·0008 in. —·0002 in.	9·525+·020 mm. —·005 mm.	+·0016 in. (+·040 mm.) +·0002 in. (+·005 mm.)
Plunger spring fitted load at top of stroke	9 lbs. 7¼ ozs.	(4·287 kgs.)	
Valve spring load	3·15 lbs. at $\frac{9}{16}$ in. long	(1·428 kgs. at 14·29 mm.)	
Pin for roller	¼ in.± ·00025in.	(6·350± ·006 mm.)	
Bore for pin in bush	¼ in.+·002 in. +·001 in.	6·350—·050 mm. +·025 mm.	+·00225 in. (+·056 mm.) +·00075 in. (+·020 mm.)
Outside diameter of bush ...	$\frac{3}{8}$ in.—·0014 in. —·0005 in.	9·525—·035 mm. —·012 mm.	
Inside diameter of roller	$\frac{3}{8}$ in.+·0009 in. —·0000 in.	9·525+·023 mm. —·000 mm.	
Valve spring load	19 lbs. at ·70 in. long	(·086 kgs. at 17·78 mm.)	
Gearbox Mainshaft			
Shaft diameter at sunwheel bush ...	$\frac{7}{8}$ in.—·001 in. —·002 in.	22·225—·025 mm. —·050 mm.	
Sunwheel bush internal	·877 in. ·878 in.	(22·276 mm.) (22·301 mm.)	+·005 in. (+·127 mm.) +·003 in. (+·003 mm.)
Shaft diameter at rear steady ...	$\frac{9}{16}$ in.+·0000 in. —·0005 In.	14·288+·000 mm. —·013 mm.	
Torrington bearing	B.97		
Piston Bores			
Operating piston bore	$\frac{7}{8}$ in.± ·0005 in. dia.	(22·225± ·013 mm.)	
Miscellaneous			
Clutch movement, ·050 in. nominal (1·7 mm.) from direct to overdrive			
Clutch spring free length	1·667 in.	(42·342 mm.)	
Pump plunger spring free length ...	2 in.	(51 mm.)	
Relief valve spring free length ...	1·182 in.	(30·02 mm.)	

GEARBOX

SECTION E

CONTENTS

Page

General Description 3

Operation 3

GEARBOX ASSEMBLY

—To remove 6

—To refit 6

TOP COVER

—To remove and refit 6

—To dismantle and reassemble (Column change) 7

—To dismantle and reassemble (Floor change) 7

CLUTCH BELL HOUSING

—To remove and refit 8

REAR COVER

—To remove and refit 8

SELECTOR SHAFTS AND FORKS

—To remove 8

—Checking selector axial loading 8

—To refit 9

FRONT COVER AND PRIMARY SHAFT

—To remove and refit 9

—To dismantle 9

—To examine and reassemble 10

MAINSHAFT ASSEMBLY

—To remove 10

—To dismantle 11

—To reassemble 11

SYNCHRO HUBS Page

—To dismantle 12

—To examine and rebuild 12

LAYSHAFT ASSEMBLY

—To remove and refit 13

—To examine 13

REVERSE IDLER WHEEL

—To remove and refit 13

GEARBOX

—To rebuild 14

COLUMN CONTROLS

—To remove and refit 15

—To adjust 15

GEARBOX

GENERAL DESCRIPTION

A gearbox having four forward speeds and a reverse is fitted, having synchromesh on all forward gears.

Internally bushed helical gears in constant mesh are used for 1st, 2nd and 3rd gears, while the 4th speed is by direct drive through the primary and mainshafts.

Spur gears are employed for reverse, and these gears are of the sliding mesh type.

OPERATION

The drive from the engine is taken by the primary shaft, which is splined at its forward end to mate with the clutch driven plate.

The layshaft cluster gear is driven by helical gears in constant mesh with the primary shaft.

With the gears in the neutral position, the primary shaft, layshaft cluster and gears rotate freely, 1st, 2nd and 3rd gears also being free to rotate on the mainshaft.

Drive will be engaged by positively connecting the selected gear to the mainshaft.

This is achieved for all forward gears by means of the sliding sleeves and the synchro hubs splined to the mainshaft.

Reverse gear is obtained by sliding the reverse idler gear along the reverse shaft into mesh with both the layshaft cluster gear, and the reverse gear incorporated with the sliding sleeve on the 3rd/4th synchro hub.

ACTION (Synchromesh)

To ensure a smooth and quiet gear change, the synchromesh action operates on all the forward gears as follows:— Engaging gear from the neutral position, initial movement of the gear lever moves the sliding sleeve (F), pushing the shifting plate (E) and the baulk ring (B) in the direction of the gear (A), which is about to drive.

The baulk ring engages with the cone on the gear, and the difference in speeds between the gear and the baulk ring, causes the baulk ring to be dragged round until it is constrained by the shifting plates (E).

Due to the design width of the shifting plates recess (D) in the baulk ring, the teeth on the baulk ring are now out of register with those on the sliding sleeve by half a tooth width, so that the chamfered faces (C) of the teeth of the baulk ring and the sliding sleeve bear upon each other.

As the baulk ring is in contact with the gear cone and the sliding sleeve, the force exerted by the driver on the gear lever is pressing the baulk ring against the gear cone. Friction between the two mating surfaces will eventually cause them to rotate at the same speed.

The baulk ring is then free of frictional drag, and the chamfered teeth on the sliding sleeve acting on the chamfered teeth of the baulk ring move it out of the way, thus allowing unrestricted movement of the sliding sleeve into engagement with the selected gear dog teeth, and locking the drive positively into the selected gear.

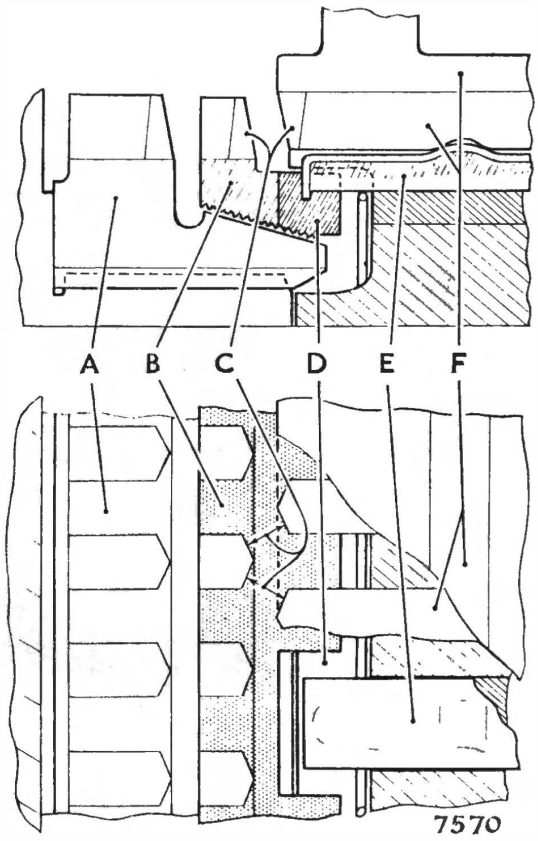

Fig. 1. *Synchromesh action*

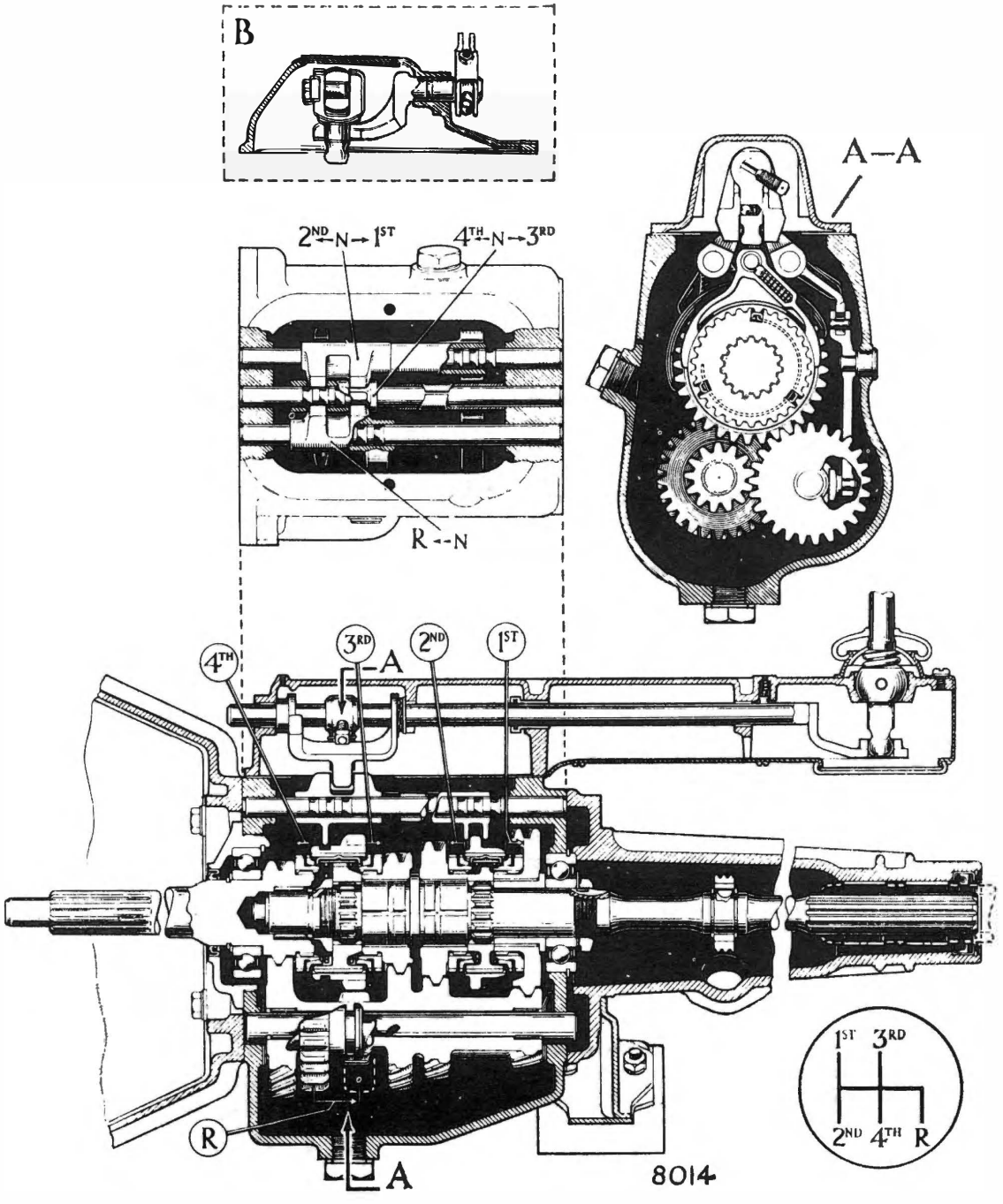

Fig. 2. Sectional view of gearbox (Inset B: Top cover for column control)

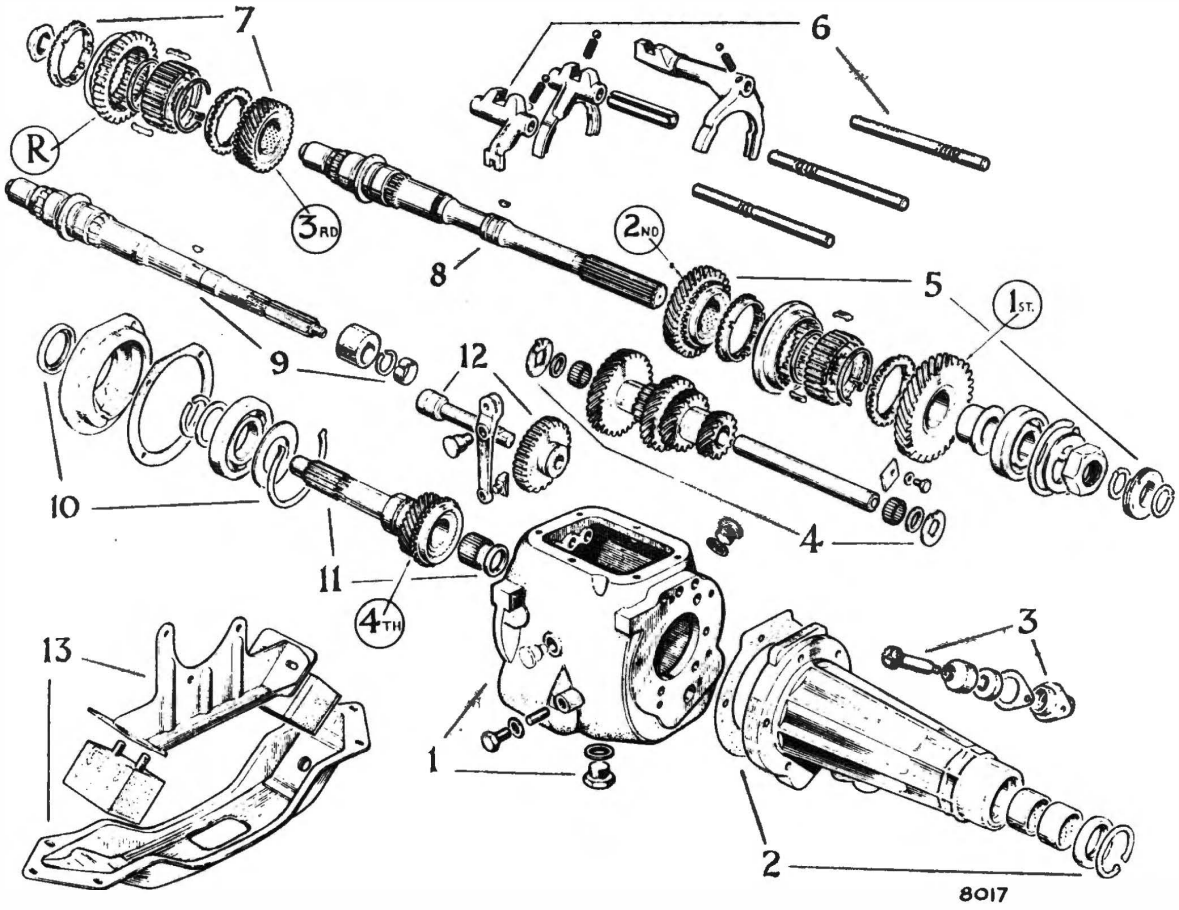

Fig. 3. *Exploded view of gearbox*

1. GEARBOX CASING
2. REAR COVER ASSEMBLY
3. SPEEDO DRIVE GEAR
4. LAYSHAFT CLUSTER ASSEMBLY
5. 1st/2nd GEAR MAINSHAFT ASSEMBLIES
6. SELECTOR SHAFTS AND FORKS
7. 3rd/4th AND REVERSE MAINSHAFT ASSEMBLIES
8. MAINSHAFT (STANDARD)
9. MAINSHAFT (OVERDRIVE)
10. FRONT COVER ASSEMBLY
11. PRIMARY SHAFT (STEMWHEEL)
12. REVERSE IDLER ASSEMBLY
13. REAR MOUNTING ASSEMBLY

GEARBOX ASSEMBLY

To remove

For cars fitted with Automatic Gearbox see *Rootes Workshop Manual WSM.139.*

For cars fitted with Overdrive, see *Overdrive section.*

Place the car on a lift or pit, and drain the radiator and gearbox.

Unfasten the clip securing the top hose to the radiator and disconnect the hose.

Disconnect battery.

Disconnect petrol pipe at the pump inlet union.

Remove air cleaner(s) and coil.

Disconnect oil gauge pipe at the engine.

Disconnect accelerator control and choke linkage.

Disconnect exhaust flange from manifold.

Remove clamp and bracket from exhaust downpipe.

Remove propeller shaft rear coupling nuts, disconnect and remove shaft rearwards off gearbox spline.

Place a jack with suitable wood packing under the rear of the sump, jack up the rear of the engine sufficiently to remove the bolts retaining the engine rear mounting bracket to the frame.

Remove the bolts from the rubber mountings.

Disconnect the speedometer cable.

For cars with console

Unscrew gearlever knob, remove screw securing the console panel at the rear and lift the panel, disengaging the two locating pegs at the front.

Disconnect the wires at the connections behind the switches, and take note of the wire colours and positions.

Cars with column change

Disconnect rod from external change speed lever on gearbox.

Remove centre floor cover plate and disconnect selector cable trunnion.

Remove selector cable complete to avoid kinking.

Other models

Slide the grommet up the gear lever.

Remove the four setscrews securing the spring retaining cap to the top cover casing.

Withdraw gear lever through the hole in the transmission tunnel.

All models

Unbolt the hydraulic clutch slave cylinder and move to one side; it is not necessary to disconnect the pipe.

Disconnect starter cable and remove the starter motor.

Lower the rear of the engine with jack.

Remove the nuts and bolts securing the bell-housing, and remove gearbox and bell-housing unit rearwards and downwards.

To refit

Reverse the preceding instructions.

Refill gearbox and check oil level.

For cars fitted with Overdrive, see *Overdrive section*

Check operation of the gearbox and associated linkage.

Check operation of overdrive if fitted.

Do not tilt the gearbox when removing or refitting, as a great strain is imposed on the driven plate.

TOP COVER

To remove

Remove gearbox cover bolts and lift off top cover and oil shield.

To refit

See "Gearbox—To rebuild".

To dismantle (Column change) (Fig. 4)

Unscrew nut and remove cotter and washer securing external change speed lever (7). Unscrew nut and remove clamp securing safety latch (11). Release lockwasher and remove setscrew (9) securing internal change speed lever (8).

Drive out locating pin (5).

Push out change speed lever shaft (4). This will release the ball and spring (6) into the bore in the cover.

Ensure that these are not lost.

Do not dismantle the screwed thimble (6) and the locknut; these are preset during manufacture and require no adjustment.

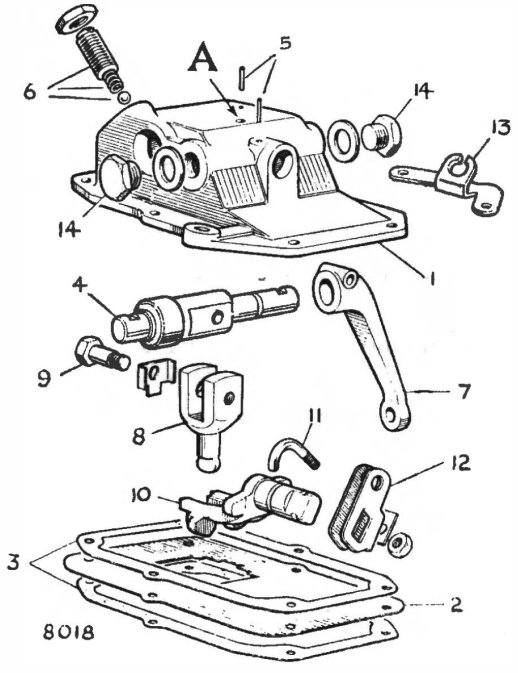

Fig. 4. *Top cover: Column change*

1. TOP COVER
2. SPLASH PLATE
3. GASKETS
4. CHANGE SPEED LEVER SHAFT
5. LOCATING PINS
6. DETENT BALL HOLDER ASSEMBLY
7. CHANGE SPEED LEVER (EXTERNAL)
8. CHANGE SPEED LEVER (INTERNAL)
9. BOLT AND LOCKWASHER (LEVER TO SHAFT)
10. SELECTOR SAFETY LATCH
11. HOOK BOLT
12. LEVER, SAFETY LATCH
13. ABUTMENT, SELECTOR CABLE
14. PLUG, REVERSE LIGHT AND OVERDRIVE SWITCH HOLES

Tap out pin (5).

Push out safety latch (10) and lever into the cover.

To reassemble (Column change) (Fig. 4)

Reassembling is a reversal of the procedure given previously, but care must be taken tightening the bolt (9) securing the internal change speed lever, to ensure that the bolt is not overtightened, and the change speed lever is free on the shaft.

The lockwasher must be securely fixed round the flats of the bolt head.

Reassembly of the detent ball and spring (6) must be made through the shaft bore in the cover.

After replacing the locating pins (5), peen over both ends of the holes, using a suitable punch.

To dismantle (Floor change)

Remove the two screws securing the reverse bias spring retainer and remove the retainer, bias spring and plunger.

Remove the screws securing the closing plate and remove the plate.

Detach the lock wire and remove the selector lever locking screw.

Slide the shaft out through the rear of the casing, this will release the damper pad and spring. Make sure these are not lost.

The safety latch, selector lever and washers will have become detached and may be removed.

The change speed shaft bushes may be renewed if necessary. New bushes must be pressed into the cover in the same position as the original.

To reassemble (Floor change)

Reassembly is a reversal of the above. Ensure that all washers are assembled in their correct positions.

Depress the damper pad and spring in the bore in the casing, and insert the shaft from the rear.

The selector lever locking screw must be secured by wire, which must be looped round the lever.

CLUTCH BELL-HOUSING

To remove and refit

Remove gearbox and bell-housing from the car as previously described.

Remove the two clips securing the clutch release bearing, and remove the bearing assembly. (See Section D, Fig. 3).

Remove the bolts and washers securing the withdrawal lever assembly and extract from the bell-housing.

Remove bolts and washers securing the bell-housing to the gearbox and remove.

Refitting is a reversal of the above instructions.

For cars fitted with Automatic Gearboxes. See Rootes Workshop Manual WSM.139.

REAR COVER

To remove

Remove the two setscrews securing the speedometer pinion adaptor, and withdraw the adaptor.

Remove speedometer pinion and housing.

Remove the bolts and washers securing the rear cover and support bracket to the casing and remove the cover. Remove paper joint and clean up faces.

Refitting is a reversal of the above procedure.

Use jointing compound on all mating faces.

SELECTOR SHAFTS AND FORKS

To remove

It is *imperative* that the selector shafts are removed rearwards only.

Remove top cover, overdrive if fitted, or rear cover.

Using one of the dummy shafts, tap out the reverse selector shaft.

Allow the dummy shafts to remain in the bores of the selector forks to retain the detent balls and springs.

Using the remainder of the dummy shafts, tap out the 1st/2nd, and 3rd/4th selector shafts, taking care not to damage the distance piece fitted to the 3rd/4th selector shaft.

Lift out the three selector forks.

The dummy shafts referred to have the following dimensions:—

One shaft: 4·95 in. long × $\frac{7}{16}$ in. diameter (12·57 cm. × 11·11 mm.)

Two shafts: 2·90 in. long × $\frac{7}{16}$ in. diameter (7·36 cm. × 11·11 mm.)

The longer shaft is for use on the 1st/2nd selector shaft.

Checking selector axial loading

The checking of the axial load necessary to move the selector groove across the ball in the 1st/2nd, 3rd/4th and reverse selector forks must be carried out as follows:—

Secure the selector fork in a vice, using soft metal jaws. Insert the original shims, selector spring and ball. Insert the selector shaft into the fork, depressing the ball with a suitable punch.

Attach a spring balance to the end of the selector shaft by means of a hand vice, or Churchill Tool RG.62.

Pull the selector shaft groove across the ball, by pulling on the spring balance, and take a reading of the load required to achieve this.

The correct loading figures are as follows:—

1st/2nd and 3rd/4th selectors:	25/35 lbs. (11·3/15·8 kgs.)
Reverse selector:	40/45 lbs. (18·0/20·4 kgs.)

These loadings are critical and must be set within the given limits.

Adjust the axial load to the correct figure by the addition or removal of shims.

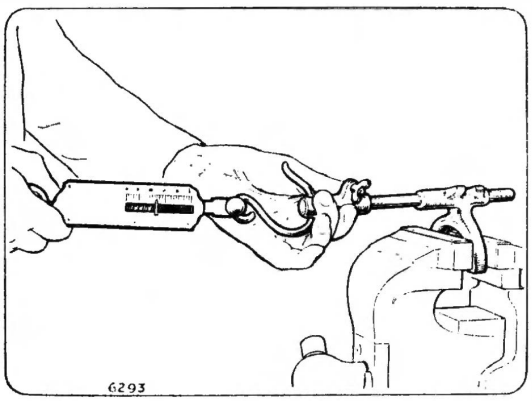

Fig. 5. *Checking axial loading of selector shaft and fork*

As it will be necessary to separate the selector shaft from the fork for reassembly to the gearbox, retain the adjusted ball and spring with the dummy selector shafts as used in dismantling.

Inspect the selector shafts for wear, particularly at the ball indent grooves.

Check the selector forks for wear on the prongs, also the engagement slot for the gearchange lever.

Inspect the steel balls for pitting, wear or flat spots.

To refit (See "Gearbox—To rebuild")

FRONT COVER AND PRIMARY SHAFT

The front cover assembly can only be withdrawn after the layshaft cluster has been lowered to the bottom of the casing.

To remove

Remove top and rear covers, or overdrive, and selectors as previously described.

Remove the four setscrews from the front cover.

Remove setscrew securing lockplate and remove lockplate.

Displace layshaft spindle by entering the dummy layshaft spindle from the front, pushing the layshaft spindle rearwards.

Remove the layshaft spindle, and allow the layshaft cluster to be lowered to the bottom of the box with the dummy spindle.

Withdraw the front cover and primary shaft from the casing.

Do not lose any of the 23 needle rollers in the spigot shaft bearing, or the spacer washer.

Mark the 4th speed baulk ring and hub, to enable the baulk ring to be replaced in the same position, then remove the ring to avoid damage.

To refit (See "Gearbox—To rebuild")

To dismantle

Remove the circlip securing the bearing to the front cover, using V.L.C. circlip pliers 7066.

Press the stemwheel assembly complete with bearing, out of the front cover. (See Fig. 6).

Remove the circlip securing the bearing and abutment washer to the stemwheel, using V.L.C. pliers 7066 ("C" points).

Press the bearing off the stemwheel. (See Fig. 7).

Remove the bearing shield.

Remove the oil seal which is a press fit in the cover.

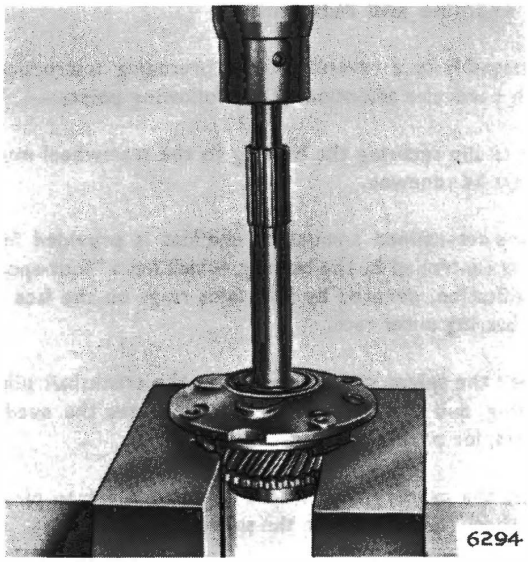

Fig. 6. *Pressing stemwheel out of cover*

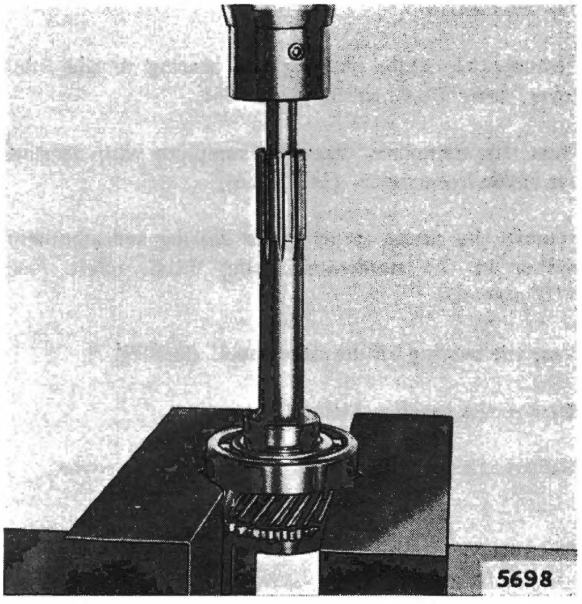

Fig. 7. *Pressing bearing off stemwheel*

To examine and reassemble

Reassembly is a reversal of the preceding instructions with particular attention to the following points:—

The circlip securing the bearing to the stemwheel must always be renewed.

A pre-determined amount of endfloat is provided for, and is controlled by the bearing, which has a "four-spot" classification, denoted by four faint rings on the face of the bearing outer race.

Check the spigot which registers in the crankshaft pilot bearing, and the counterbore which houses the needle rollers, for pitting or wear.

Insert the primary shaft into a new clutch driven plate, and check for backlash on the splines.

Examine the cover for damage or burrs on the mating face.

Renew the oil seal.

Examine the needle rollers for wear or pitting. If any one roller shows signs of either condition, the complete set of rollers must be renewed.

MAINSHAFT ASSEMBLY

To remove

Remove top cover, overdrive or rear cover, front cover assembly and selectors as previously described.

Remove circlips securing speedo drive wheel, and remove wheel and key (pump drive cam on overdrive models).

Lock mainshaft by engaging two gears at once.

Remove the nut on the mainshaft securing the rear bearing, and reselect neutral.

Support the mainshaft at its forward end, and using a mallet, drive it forward until free of the rear bearing (See Fig. 8).

Retain the 1st speed gear and bush in the casing by hand, and withdraw the rest of the assembly out through the front of the casing.

Be sure to mark all baulk rings to enable them to be replaced in their correct positions relative to their hubs and gears.

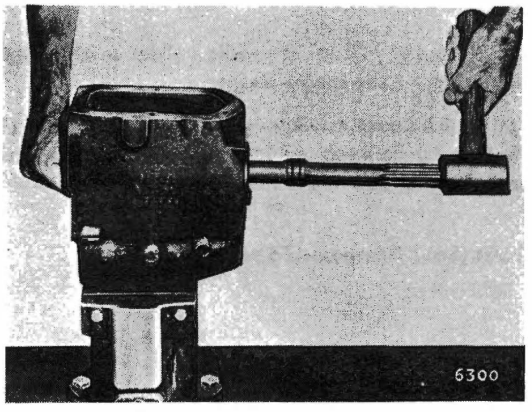

Fig. 8. *Driving out mainshaft*

To dismantle

Place mainshaft assembly on the base of a press tailshaft upwards, and fit suitable "V" blocks round the 3rd speed gear, under the 2nd speed gear to provide support for the withdrawal of the 1st/2nd synchro hub from the mainshaft (see Fig. 9).

It may be necessary to remove the sliding sleeve of the 3rd/4th synchro hub, in order to allow the blocks to obtain sufficient purchase on the 2nd speed gear.

Press the mainshaft out of the hub as shown in Fig. 9.

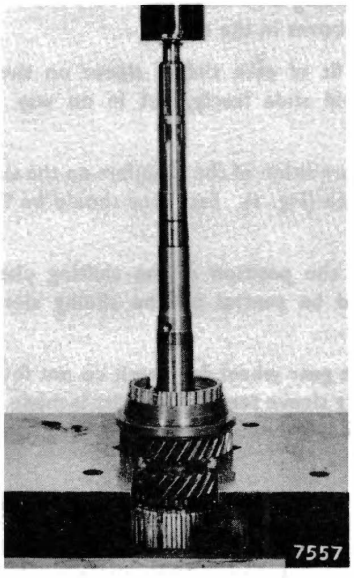

Fig. 9. *Removing 1st/2nd synchro hub*

Remove the mainshaft from the press, place in a vice protected by soft jaws, and remove the front nut.

Replace the mainshaft in the press tailshaft downwards, place a support beneath the 3rd speed gear, and press the mainshaft out of the 3rd/4th synchro hub as shown in Fig. 10.

Do not forget to mark all baulk rings for reassembly.

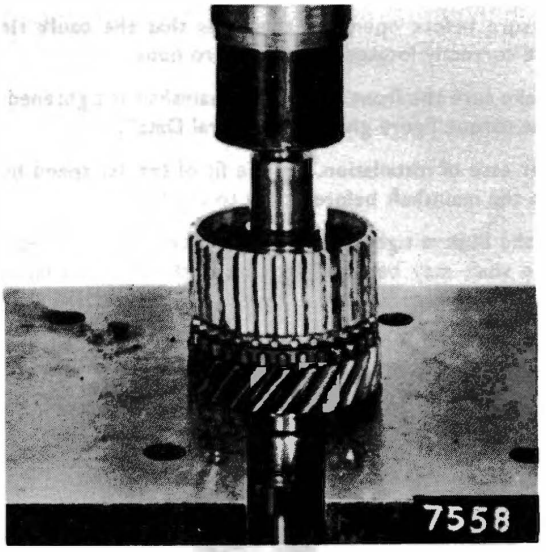

Fig. 10. *Removing 3rd/4th synchro hub*

To reassemble

Reassembly of the mainshaft is a reversal of the preceding instructions with particular attention to the following points:—

BOTH synchro hubs MUST be pressed on to the mainshaft (see Figs 11 and 12).

Fig. 11. *Pressing on 3rd/4th synchro hub*

Ensure before operating the press that the baulk rings are correctly located in the synchro hubs.

Make sure the front nut on the mainshaft is tightened to the torque figure given in "General Data".

For ease of installation, try the fit of the 1st speed bush on the mainshaft before fitting to the box.

If the bush is tighter than can be fitted with the fingers, the shaft may be eased by the careful use of Diamond tape on the surface of the shaft.

To refit (See "Gearbox—To rebuild")

Fig. 12. *Pressing on 1st/2nd synchro hub*

SYNCHRO HUBS

To dismantle

Remove the sliding sleeve, detach the shifting plates, and lift the two circlips out of the hub.

This procedure applies to both hubs.

To examine

Examine the baulk rings for symmetry of the dog teeth above the shifting plate slots. Renew if visibly offset.

Check the baulk rings for concentricity by "blueing" the corresponding gear cone and rotating the baulk ring on the cone.

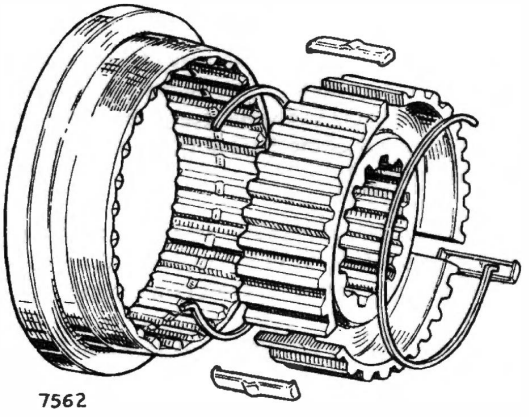

Fig. 13. *Synchro hub assembly*

A corresponding blue marking should show on the tops of all the grooves in the ring.

Check the fit of each sliding sleeve on the hub. The sleeve should slide freely, but in no way tilt on the splines.

Check the condition of the chamfers on the sliding sleeve internal teeth (Fig. 1). Each face should be flat and free from burrs.

Check also the position of the shifting plate grooves. They should be central on the sliding sleeve internal teeth.

See that the gear wheel dog teeth do not foul the roots of the sliding sleeve teeth. If contact is made, the tops of the teeth should be carefully stoned until a clearance is obtained.

Check that the surface of the synchro cone is free from glazing or ridging.

See that in each set of shifting plates, all three are the same length and have an identical top profile.

Replace any shifting plate circlips that are weak, or show signs of wear at the contact faces with the shifting plates.

Check the mainshaft for wear at the spigot, the splines, the collar integral with the shaft, and the ground surfaces on which the 2nd and 3rd gear bushes operate.

Fit the splines of the tailshaft into the front end of the propeller shaft, and check for backlash.

Test that the baulk ring will slide freely within the sliding sleeve and the hub recess. Carry out this test with the sleeve assembled to the hub, with circlips and shifting plates in position.

LAYSHAFT ASSEMBLY

To remove

Remove top cover, overdrive if fitted, or rear cover, front cover assembly and mainshaft, as previously described.

Extract the layshaft cluster complete with rollers, spacer rings and dummy spindle. (See page 9, "FRONT COVER AND PRIMARY SHAFT").

Remove the two thrust washers, two spacer washers situated on top of the needle rollers, and the needle rollers.

To refit (See "Gearbox—To rebuild")

To examine

Endfloat on the layshaft cluster should be ·006—·008 in. (·15—·20 mm.). This clearance should be checked with the assembly in a dry condition.

Adjustment for endfloat is provided by selective assembly of the front thrust washer.

Check the needle bearings for wear or pitting. If any one roller shows signs of either condition, renew the complete set.

REVERSE IDLER WHEEL

To remove

Remove top cover, overdrive if fitted, or rear cover, front cover assembly, mainshaft, and layshaft cluster.

Remove idler operating lever assembly.

Extract the reverse idler shaft through the front of the casing, using the following method:—

Make up a piece of steel to the dimensions given in Fig. 14, and insert between the reverse idler gear, and the head of the idler shaft. Push the gear into contact with the tool. Insert a long copper or brass drift through the back of the box, place the end on the base of the idler gear, as indicated, and drift the idler shaft out of the casing.

To refit (See "Gearbox—To rebuild")

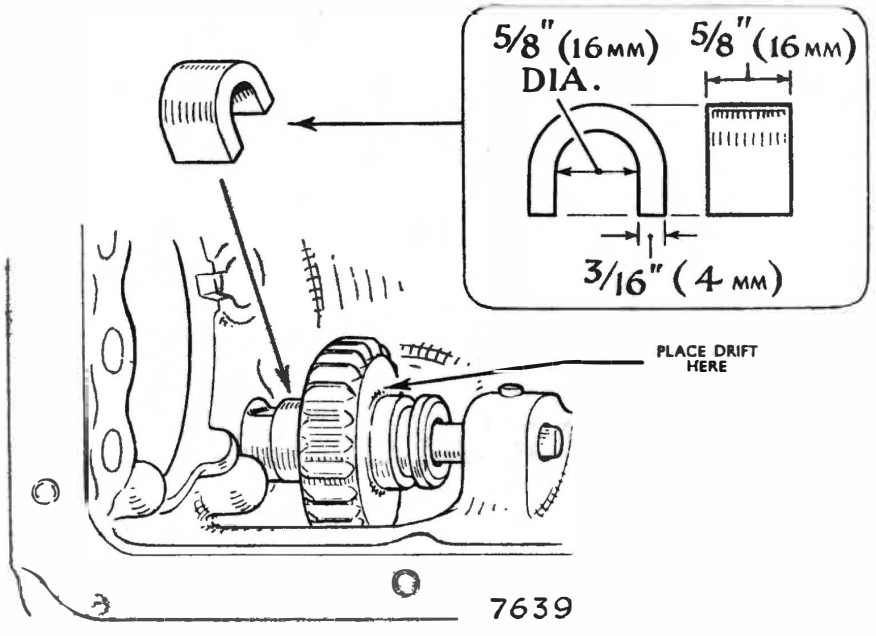

Fig. 14. *To remove reverse idler shaft*

GEARBOX

To rebuild

Check for wear at all bores and examine the casing for cracks.

Remove any burrs from the mating surfaces.

Use jointing compound on all mating faces.

1. Fit the reverse idler gear and shaft to the casing, fork groove to the rear. Locate the flat on the end of the shaft to the location pin in the casing, and push fully home.
2. Fit reverse idler operating lever.
3. Using thick grease, position the layshaft cluster thrust washers (large one to the front), in the casing.
4. Check that there are the correct number of needle rollers in the layshaft cluster at each end, and locate with grease.
5. Fit the spacer rings to both ends of the layshaft cluster, on top of the needle rollers. Locate the assembly with the dummy shaft and lower to the bottom of the box.
6. Enter the mainshaft assembly through the hole in the front of the box, tailshaft first.

   Hold the 1st speed gear, bush and baulk ring inside the box, pass the tailshaft through these and on through the rear bearing, which is already fitted to the casing.

   Push the shaft home in the rear bearing until the shoulder on the shaft contacts the bearing.

   Make sure the 1st speed baulk ring is correctly positioned, and that the slots line up with the shifting plates in the hub.
7. Place the casing on a press base with the bearing supported, and press the mainshaft fully home.
8. Fit a new nut and lockwasher, but do not tighten fully at this stage.
9. Ensure that the 4th speed baulk ring, the correct number of rollers, and the spacer washer, are all in position on the stemwheel assembly.

   Always fit the spacer washer with the chamfer to the mainshaft.

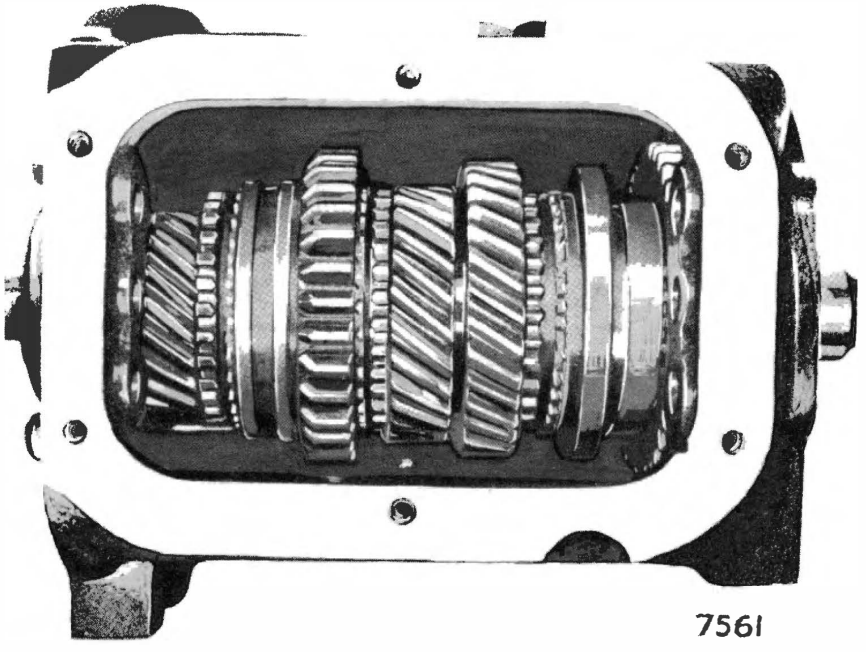

Fig. 15. *Mainshaft assembly installed*

10. Fit the front cover with the drain hole at the bottom. Always use a new joint when refitting and apply jointing compound to both faces of the joint.

11. Invert the gearbox, in order to allow the layshaft gears to fall into mesh with the mainshaft gears, and insert the layshaft spindle through the rear of the casing, positioning the thrust washers at each end.

12. Fit the layshaft lockplate and secure.

13. Place the gearbox upright and fit the 3rd/4th, 1st/2nd, and reverse selector forks, in that order.

    Fit 1st/2nd, 3rd/4th, and reverse selector shafts, in that order.

    The tubular distance piece is fitted to the rear of the 3rd/4th selector shaft.

14. Now select two gears at once to lock the box and using VLC mainshaft nut crowfoot wrench, RG.482, tighten the rear nut on the mainshaft to the correct torque figure. See "General Data" for the correct torque figure, and the setting to which the torque wrench must be adjusted.

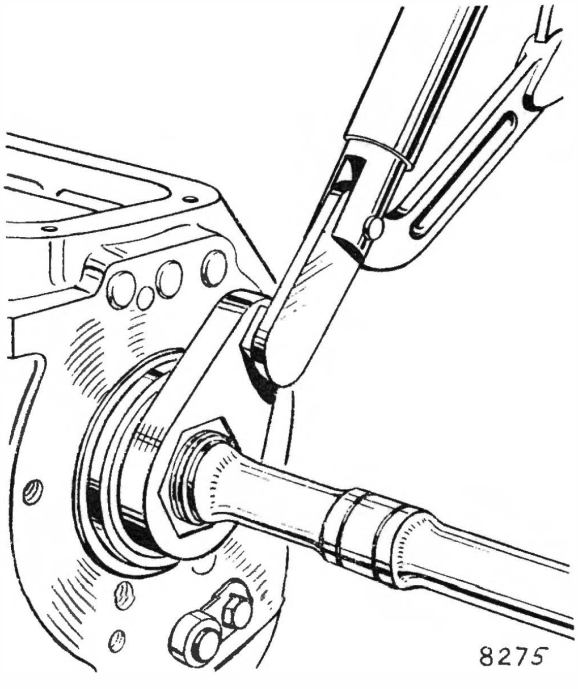

Fig. 16. *Mainshaft nut crowfoot wrench, RG.482*

Return gears to neutral.

Lock the nut by bending the flange of the lock-washer over a flat on the nut.

15. Fit the front speedo drive wheel circlip, the key, the speedo drive wheel, and the rear circlip.

    Where overdrive is fitted, fit the pump cam instead.

16. Fit rear cover and speedo drive pinion, or overdrive, if fitted. Check the selection of all gears.

17. Fit the top cover with splash plate and two joints, taking care that the selector lever moves freely across the slots in the forks. Check the operation of all gears.

COLUMN CONTROLS

To remove (See Fig. 17)

Remove the steering wheel and cowls as described in Section J.

Remove the selector lever pivot bolt (12).

Slacken the cable pinch nut and remove the selector lever (12).

Drive out the pin securing the operating boss to the control shaft (2).

Drive out the pin securing the control spring (11) to the control shaft.

Remove the two bolts securing the upper bracket (4).

The control shaft assembly may now be removed from the steering column by pulling upwards.

The operating boss and control spring (11) will become detached as the assembly is removed, and care must be taken to remove these as they become detached.

To refit

Refitting is a reversal of the preceding instructions, with particular attention to the following:—

To obtain bias of the control spring (11), turn the free end of the spring (winding on right-hand drive cars, unwinding on left-hand drive cars), so that it butts against the steering outer column (see Fig. 17).

The control shaft (2) must locate on the correct splines in the lower gearshift lever (14).

Re-pin the operating boss and control spring to the control shaft, using new pins.

The spigot in the upper bracket must be positioned in its locating hole in the steering outer column.

Now move the selector lever (21) on the gearbox sideways through its travel, and then to an approximate midway position.

Insert a $\frac{3}{16}$ in. (4·5 mm.) diameter pin through the hole in the gearbox cover (A, Fig. 4). Move the lever until the pin passes through the hole in the selector shaft. This will fix the selector lever in the neutral position between 3rd/4th gears.

The control rod (18) should now be adjusted for length until the clevis pin can be easily inserted.

Tighten the cable pinch nut and remove the locating pin. Always use two spanners when tightening the cable pinch nut, one spanner to hold the trunnion to avoid kinking the cable as the nut is tightened.

To adjust

Disconnect the control rod (18) from the end of the gearbox change speed lever (19), and slacken the cable pinch nut at the lower support bracket (7) on the steering column.

See that the gearshift lever is located in the neutral position between 3rd and 4th gears. (The action of the control spring (11) and the bias spring (6) will locate the lever in the 3rd and 4th gear position).

Place the lever centrally between the edges of the slot in the cowl to obtain neutral position.

See that the change speed lever (19) on the gearbox is in the neutral position.

A further fine adjustment is obtained by means of the threaded abutment at the end of the cable conduit.

This enables the length of the outer conduit to be altered in relation to the inner cable.

The fine adjustment should be used with care and it is not advisable to adjust more than $\frac{1}{16}$ in. (1·5 mm.) by this means, at any one time.

Operation of the gearshift should be tested before carrying out any further adjustment.

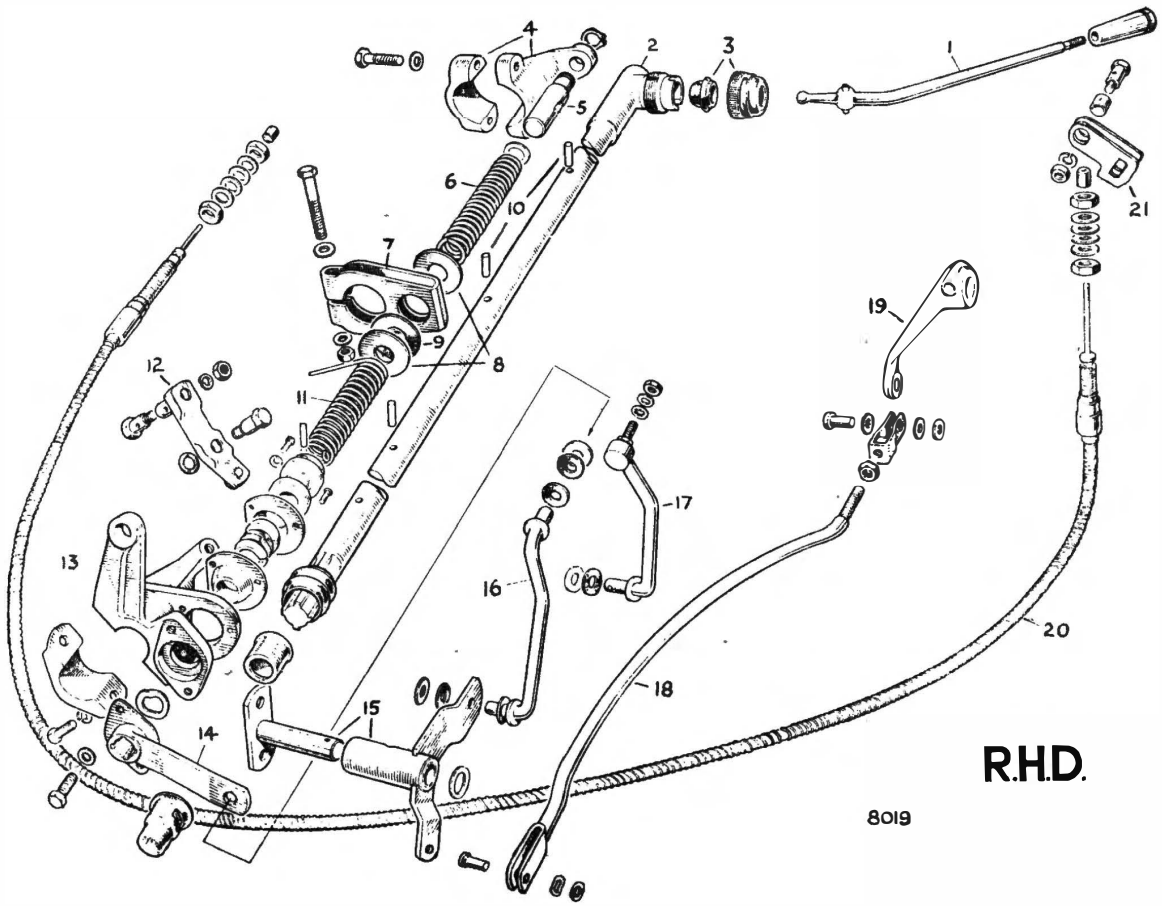

Fig. 17. *Column control assembly*

1. HAND LEVER ASSEMBLY
2. CONTROL SHAFT
3. CAP AND INSULATOR
4. SUPPORT BRACKET AND CAP
5. PIVOT GUIDE
6. BIAS SPRING
7. ABUTMENT BRACKET
8. WASHERS (STEEL)
9. WASHER (RUBBER)
10. SPRING PINS
11. CONTROL SPRING
12. SELECTOR LEVER ASSEMBLY
13. SUPPORT BRACKET ASSEMBLY
14. GEARSHIFT LEVER
15. RELAY LEVER
16. CONTROL ROD
17. CONTROL ROD
18. CONTROL ROD
19. CHANGE SPEED LEVER (EXTERNAL)
20. SELECTOR CABLE
21 SAFETY LATCH LEVER

Page 18 was blank

ADDITIONAL INFORMATION

For all models, the gearbox casing, Item 1, Fig. 3, page 5, and the rear cover, Item 2, Fig. 3, page 5, incorporate an extra hole in the joint faces, and the rear cover is fitted with a single bush instead of two.

The rear cover, Part No. 1235732, can only be fitted to gearbox casing, Part No. 1235712, and is not interchangeable with earlier gearboxes.

On no account must an attempt be made to fit the single bush, Part No. 1235731, to any twin bush type cover.

Models fitted with overdrive also have a new adaptor, Part No. 1235733, Item 95, Fig. 9, page 9, Section E1 (Overdrive), to suit the new gearbox casing.

This adaptor can be used with earlier type gearboxes, and will be supplied as a service replacement.

If fitting a single bush to the later type cover, the bush must be positioned as shown in Fig. 18.

This is essential in order to provide lubrication to the propeller shaft sleeve.

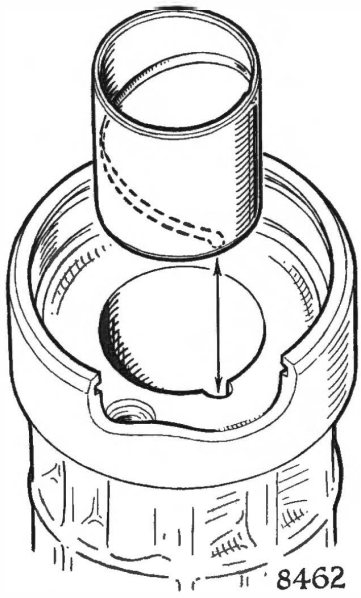

Fig. 18. *Fitting bush to rear cover*

FRONT SUSPENSION

SECTION F

CONTENTS

	Page
ACCIDENT DAMAGE	17
ANGLES	4
—Ackerman	9
—Camber	6
—Castor	8
—Included	8
—Steering axis inclination	8
—Wheel lock	11
BOTTOM LINK	17
—To remove and refit	17
BOTTOM SWIVEL BEARING	19
—To remove and refit	19
—Checking for wear	20
CASTOR CONTROL WEDGES	12
DICTIONARY OF TERMS	17
FRONT GAP GAUGE	23
FRONT HUB AND BEARINGS	12
—To remove and dismantle	12
—To reassemble and refit	13
—To adjust endfloat	13
FRONT ROAD SPRING	15
—To remove and refit	15
—Checking	17
FRONT SHOCK ABSORBER	13
—To remove and refit	13
—Testing by hand	14
FRONT SUSPENSION ANGLES AND STEERING ALIGNMENT	4
—Checking	6

Page

FRONT WHEEL ALIGNMENT ... 7
—To check ... 7
—To adjust ... 7

FULCRUM PIN NUTS ... 22

GAP GAUGES ... 23
—Front ... 23
—Rear—Minx, Gazelle, Rapier ... 24
—Rear—Alpine ... 25
—Rear—Super Minx, Vogue, Sceptre ... 26

GENERAL DESCRIPTION ... 3

LINK BUSHES ... 20
—To renew ... 20

MAINTENANCE ... 3

PREPARATION OF CAR ... 5

REMOVING AND REFITTING, SUSPENSION ... 11

SERVICE OPERATIONS ... 17
—Servicing front hubs ... 17
—Checking front road springs ... 17
—Accident damage ... 17

SHIMS ... 11

STABILISER BAR ... 14
—To remove and refit ... 14

STUB AXLE CARRIER ... 15
—To remove and refit ... 15

TOOLS AND APPLIANCES ... 6

TOP LINK ... 17
—To remove and refit ... 17

TOP SWIVEL BEARING ... 18
—To remove and refit ... 18
—Checking for wear ... 19

FRONT SUSPENSION

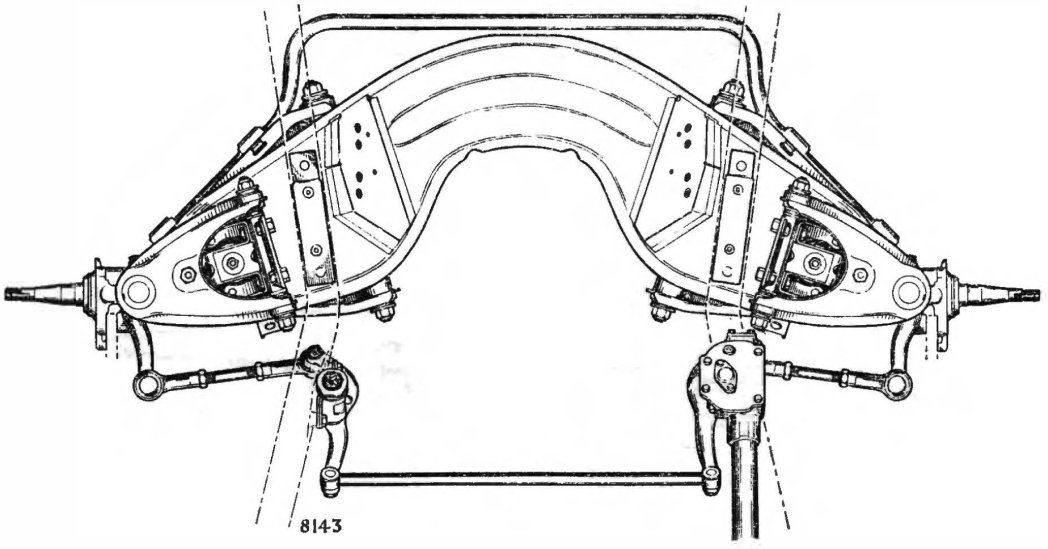

Fig. 1. *Plan view of front suspension assembly and steering linkage*

GENERAL DESCRIPTION

The front suspension is of the coil spring and wishbone type and consists of two independent units, each unit employing two links of unequal length. The links adopt a trailing attitude and are located on a pressed steel crossmember at their widest ends by means of long fulcrum pins and bonded rubber bushes.

Provision is made for camber angle adjustment by the insertion of shims between the top fulcrum pin and the crossmember.

The front edges of the two bottom links are connected by a single stabiliser bar.

Road shocks are absorbed by coil springs which are controlled by telescopic type shock absorbers situated inside the coil springs and located with rubber bushes at their top and bottom ends, between the crossmember and the bottom link respectively.

MAINTENANCE

Maintenance checks will be required at regular intervals as given in the "Owner's Service Book" and will include the following:—

(i) Checking the security of the top and bottom swivel bearings, top and bottom fulcrum pins, crossmember and stabiliser bar.

(ii) Checking the condition of the rubber covers on the top and bottom swivel bearings.

(iii) Checking camber angle and front wheel alignment.

(iv) Repacking hub bearings with grease and setting the endfloat.

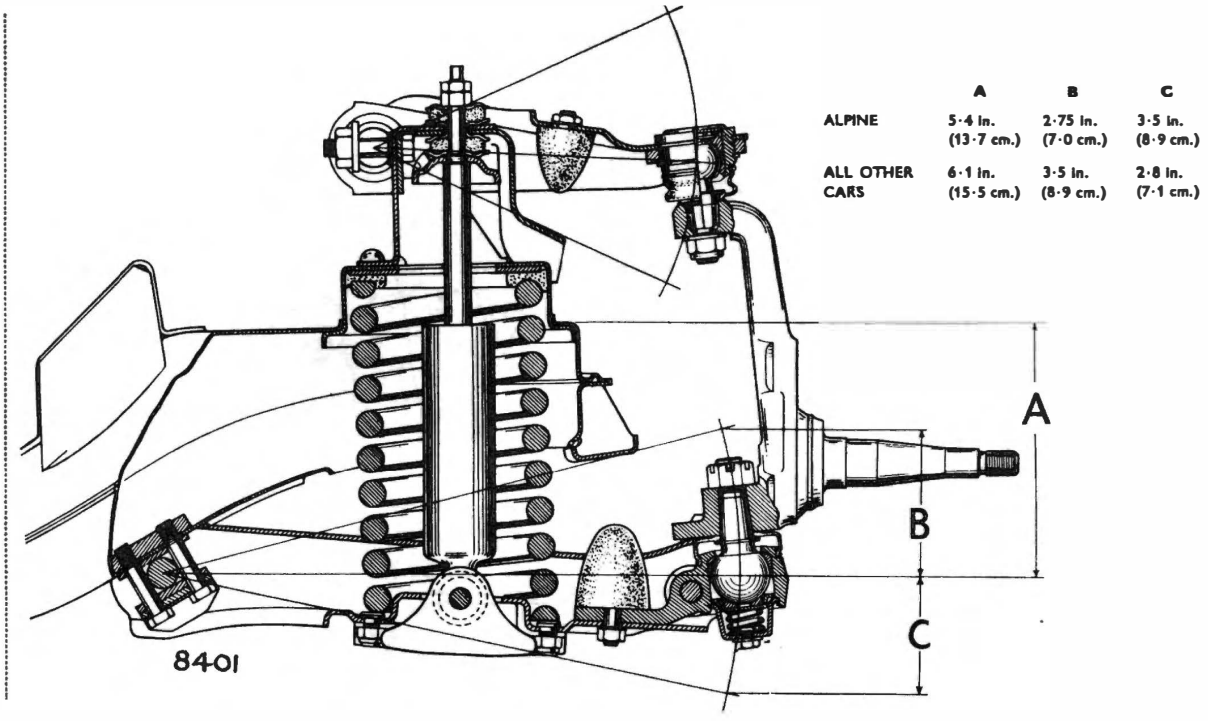

	A	B	C
ALPINE	5·4 in. (13·7 cm.)	2·75 in. (7·0 cm.)	3·5 in. (8·9 cm.)
ALL OTHER CARS	6·1 in. (15·5 cm.)	3·5 in. (8·9 cm.)	2·8 in. (7·1 cm.)

Fig. 2. *Part sectional view of front suspension unit*

FRONT SUSPENSION ANGLES AND STEERING ALIGNMENT

Detailed instructions are given in the following paragraphs for checking and adjusting camber angle, front wheel alignment and Ackerman angles, together with checking steering axis inclination and castor angles. The need for making a full front suspension angle and steering alignment check is only necessary after accident damage has been repaired, when excessive tyre wear is evident or steering difficulties are experienced.

At certain maintenance intervals only the camber angle and the front wheel alignment is checked. When any appreciable inaccuracy is discovered, it is advisable to make a full front suspension angle and steering alignment check before taking any corrective action because adjustment to camber angle and front wheel alignment will effect the steering axis inclination and Ackerman angles.

A considerable amount of weight is required making the work arduous and at times impracticable for some Service Repair Shops. To facilitate the loading of the car, it is loaded down only at the front end onto metal gap gauges inserted within the two front suspension units when only a reasonable amount of weight is required. Hardwood gap gauges are inserted on top of the rear axle to position the rear end of the car.

The two sets of gap gauges and the loading platform can be made in most Service Repair Shops. Dimensions and instructions for the gap gauges are given later in this Section.

To check the front suspension data as given in "General Data", the car must be loaded onto the front and rear gap gauges. When in this condition the quoted angles are equivalent to the angles obtained with the car in a fully and evenly loaded condition with the exception of the castor angle; this angle is calculated to take into account of the "nose down" attitude of the car.

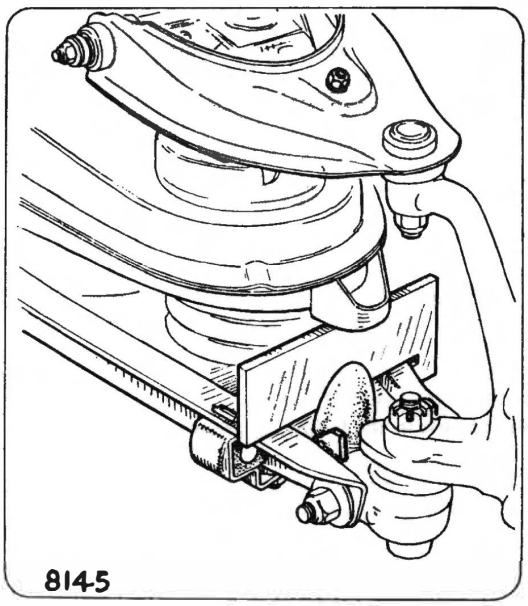

Fig. 3

Front gap gauge in position between the bottom link and the bump rubber stop. Churchill tool No. RG.403 for Alpine cars and RG.404 for all other cars

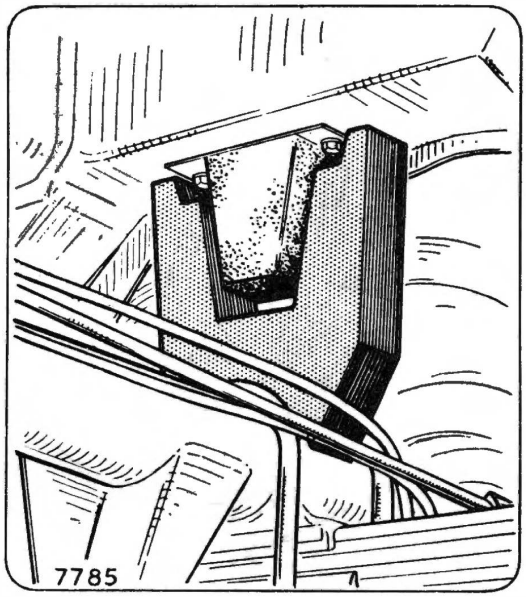

Fig. 4

Rear gap gauge in position; ensure that the gap gauge does not trap any hydraulic pressure pipes

PREPARATION OF CAR

When checking the front suspension angles and steering alignment, the following requirements must be met:—

1. The car must be standing on perfectly level ground or shop floor and in such a position to permit some forward movement as this is a necessity for some makes of front wheel alignment gauges.

2. The tyres must have the same amount of wear and be inflated to the normal running pressures, see under "Wheels and tyres—General Data Section".

3 The front hub bearings must have the correct amount of endfloat, see under "Front Suspension—General Data Section"

   The four track rod ball joints and the two top and two bottom swivel bearings must be in good condition, see under "Checking swivel bearings" in this Section and "Ball joints—To check for wear—Steering, Section J"

4. The front wheels must be checked for "run-out", see under "Checking wheel and tyre run-out—Wheels and tyres, Section L". Depending on the type of checking gauge in use, the points of maximum "run-out" are positioned so they are clear of the contact points of the checking gauge.

5. The front and rear suspension must be loaded down on to four gap gauges by placing weights on the front of the car. The approximate weight required is 300 lbs. (136 kg.) evenly distributed on a platform attached to the front of the car. The platform comprises a stout plank of wood supported by two suitably cranked steel bars $\frac{7}{8}$ in. (22 mm.) square inserted in the front jacking sockets.

   At the front, steel gap gauges are positioned between the bottom links and the underside of the bump rubber stop. At the rear, hardwood gap gauges are positioned between the top of the axle casing and the underframe; the hardwood gauges are shaped to clear the bump rubbers, fit on the axle casing and must avoid all hydraulic pressure pipes.

   Normally the rear end of the car has to be lifted by hand to enable the rear gap gauges to be positioned and subsequently gripped in position by the lowering of the car. When it is found that the gap gauges are a slack fit, a small weight can be placed on the rear end of the car to bring it down onto the gap gauges.

   Move the car backwards and forwards to settle the front wheels in the straight ahead and true running attitude; the camber angle and front wheel alignment can now be checked.

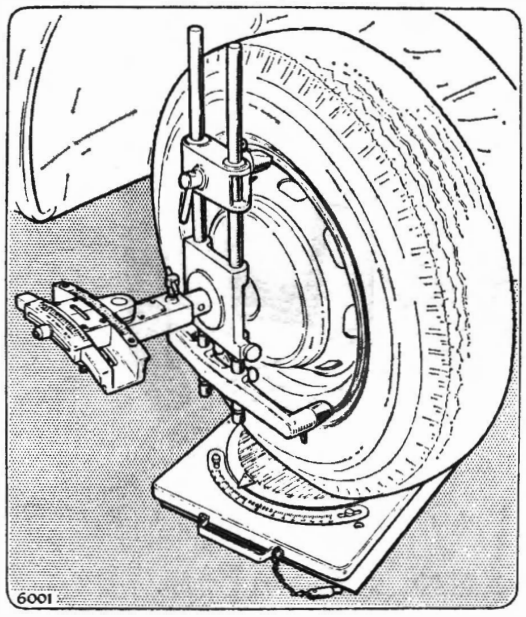

Fig. 5

Camber castor and steering axis inclination angle checking gauge in position with a turntable gauge beneath the front wheel

6. Keep the front wheels in the straight ahead position and slowly move the car forward until the front wheels are on the turntable gauges and the rear wheels on the wooden ramps, the latter will keep the car in a level plane, but these are unnecessary when the turntable gauges are sunk into the ground.

   Stop the car without applying the brakes so the free condition of the turntable gauges is not disturbed.

   Lock all four wheels by blocking the brake foot pedal in the down position; the castor, steering axis inclination and Ackerman angles can now be checked.

TOOLS AND APPLIANCES

There are many different types of tools and appliances available for checking the front suspension angles and steering alignment but in every instance the manufacturers instructions must be carefully observed and the car loaded onto the gap gauges.

Any reputable make may be used, the special tools shown in this Section are obtainable from Messrs. V. L. Churchill & Co. Ltd. and a full list will be found in Section "S" of this manual. The following tools will be required:—

Camber, castor and steering axis inclination gauges.

Front wheel turntable gauges and rear wheel ramps the same thickness as the turntable gauges; the rear wheel ramps will keep the car on a level plane but these will be unnecessary when the turntable gauges are sunk into the workshop floor.

Front wheel alignment gauge.

CHECKING FRONT SUSPENSION ANGLES AND STEERING ALIGNMENT

As the front suspension angles and steering alignment are all co-related it is important that all settings are checked first and best in the following order:—

(i) Camber angle

(ii) Front wheel alignment

(iii) Steering axis inclination angle

(iv) Castor angle

(v) Ackerman angles

and the findings analysed, see under "Included angle" before any corrective action is taken.

An exception to the foregoing order is made at certain maintenance intervals when only the camber angle and front wheel alignment is checked. However, it is advisable when any appreciable inaccuracy is discovered to make a full front suspension angle and steering alignment check before taking any corrective action because adjustment to camber angle and front wheel alignment will alter the steering axis inclination and Ackerman angles.

Camber angle

Camber angle is the angle of inclination of the front wheel from the vertical when viewed from the front. Outward inclination at the top of the wheel is termed "positive" while inward inclination is termed "negative".

The camber angle is adjusted by positioning shims between the top fulcrum pin and the crossmember.

The camber angle is given in the "General Data Section".

The relationship between camber angle, front wheel alignment and steering axis inclination angle is such that front wheel alignment and steering axis inclination will alter as the camber angle alters. It is advisable, therefore, to check the steering axis inclination angle before adjusting the camber angle, see under "Included angle" and after adjusting the camber angle check the front wheel alignment and adjust as necessary.

To check

1. Prepare the car, see under "Preparation of car".
2. Apply a suitable camber angle checking gauge to the front wheel and check the camber angle, exercising care to follow the gauge manufacturer's instructions and avoiding wheel run-out. Note the gauge reading.
3. Effect the same procedure with the opposite front wheel and note the gauge reading.
4. Check the steering axis inclination angle, see under "Steering axis inclination angle—To check".

To adjust (Fig 8)

Before making any adjustment to the camber angle, calculate the included angle, see under "Included angle". When adjustment is necessary proceed as follows:—

1. Remove the weights, gap gauges and jack up the front of the car using a wooden beam between the jack head and the crossmember. Remove the front wheel and jack up the bottom link to relieve the strain on the top fulcrum pin bolts.
2. Slacken, *but do not remove*, the top fulcrum pin bolts.
3. To increase the camber angle, move the required thickness of shims from between the crossmember and the outer face of the fulcrum pin (position A) to between the inner face of the fulcrum pin and the attachment plate (position B). Any short alignment shims must be left undisturbed.

   To decrease the camber angle, add the required thickness of new shims between the crossmember and the outer face of the fulcrum pin (position A). Any short alignment shims must be left undisturbed.
4. Tighten the two top fulcrum pin bolts.
5. Refit the front wheel and remove the jack from under the bottom link.
6. Adjust the camber angle of the opposite front wheel as necessary, in a similar manner.
7. Recheck the camber angle and readjust as necessary, check and adjust the front wheel alignment as necessary, see under "Front wheel alignment".

Front wheel alignment

The front wheel alignment is considered to "toe-in" when the setting of the front wheels is such that the distance between the front of the wheels is less than that at the rear of the wheels, when taken in the same plane.

Conversely, it is considered to "toe-out" when the distance at the front is greater.

Front wheel alignment is sensitive to the camber angle and will alter as camber angle alters. It is advisable, therefore, to adjust front wheel alignment only when the camber angle is known to be correct.

Front wheel alignment will effect the Ackerman angles and even when the front wheel alignment is correct, the Ackerman angles could be outside the specified limits and result in excessive and unaccountable tyre wear.

To guard against this eventuality, on completion of any front wheel alignment adjustment, ensure that the two track rods are both of the same length.

The front wheel alignment is given in the "General Data Section".

To check

1. Prepare the car, see under "Preparation of car", check and adjust the camber angle as necessary, see under "Camber angle—To check".
2. Apply a suitable front wheel alignment checking gauge to the front wheels, exercising care to follow the gauge manufacturer's instructions and avoiding any front wheel "run-out". Note the gauge reading.

To adjust

1. Slacken the two ball joint locknuts on both track rods; the outer locknuts have left-hand threads and the inner locknuts have right-hand threads.
2. Lengthen or shorten *both* track rods the required amount by rotating the cross tubes as necessary; on completion of the adjustment check that the length of the two track rods is equal, when the lengths are unequal the Ackerman angles can be incorrect, thus any unequal length must be eliminated, see under "Track rods, To remove and refit—Steering Gear, Section J".
3. Tighten the four ball joint locknuts ensuring that the tapered ball pins are centrally disposed within their sockets.

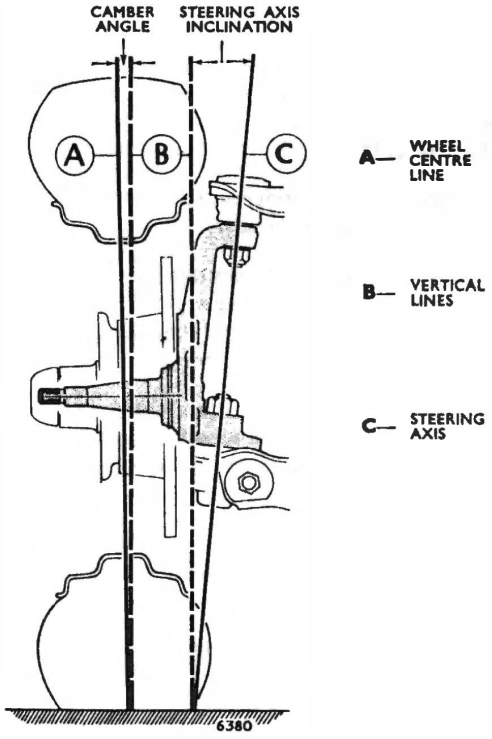

Fig. 6

Camber and steering axle inclination angles, the addition of these two angles form the "included angle"

Castor angle

Castor angle is the angle of inclination of the stub axle carrier axis from the vertical when viewed from the side. Rearward inclination at the top of the axis is termed "positive" while forward inclination is termed "negative".

The angle is built into the front suspension and cannot be adjusted but must be checked after accident damage has been repaired and when directional instability is experienced to ensure the angle is within the specified limits. A calculated castor angle is given in the "General Data Section".

Any inaccuracies discovered can be attributed to a damaged crossmember, top or bottom link.

To check

1. The car will have already been prepared for the camber angle and front wheel alignment checks.
2. Apply a suitable castor angle checking gauge to the front wheel and check the castor angle, exercising care to follow the gauge manufacturer's instructions and avoiding any front wheel "run-out". Note the gauge reading.
3. Effect the same procedure with the opposite front wheel and note the gauge reading.
4. When the castor angles are incorrect, the front suspension must be dismantled and each detail examined for wear and accident damage.

Steering axis inclination angle

The steering axis inclination angle is the angle at which the steering axis is inclined inwards from the vertical when viewed from the front of the car.

The angle is built into the front suspension and cannot be adjusted, and it will remain correct providing the camber angle is correct. The relationship between the steering axis inclination and camber angle is such that the latter will alter as the steering axis inclination angle alters.

The steering axis inclination angle is given in the "General Data Section".

To check

1. The car will have already been prepared for the camber angle, front wheel alignment and castor angle checks.
2. Apply a suitable steering axis inclination angle checking gauge to the front wheel and check the steering axis inclination angle, exercising care to follow the gauge manufacturer's instructions and avoiding any front wheel "run-out". Note the gauge reading.
3. Effect the same procedure with the opposite front wheel and note the gauge reading.
4. When the steering axis inclination angles are incorrect and the camber angle is known to be within the specified limits, the front suspension must be dismantled for each detail examined for wear and accidental damage.

Included angle

The included angle is the addition of the camber and steering axis inclination angles and can be utilised to determine whether adjustment of the camber angle will correct any inaccuracies in the front suspension angles or whether the front suspension must be dismantled and the components examined for wear and damage.

When the addition of the camber and steering axis inclination angles, determined by the checking gauges, is identical to the addition of the true angles given in the "General Data Section", it indicates that the camber angle can be corrected.

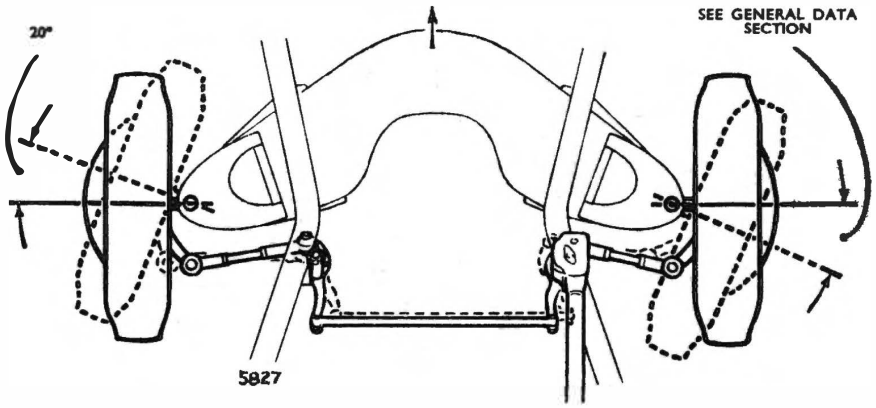

Fig. 7. *Ackerman angles showing front wheel "toe-out" in turns*

Conversely, when the addition of the two angles determined by the checking gauges differs from the addition of the true angles, it indicates that no useful purpose will be served by adjusting the camber angle as the steering axis inclination angle will always be incorrect.

Any inaccuracies discovered can be attributed to a damaged stub axle carrier.

Ackerman angles

The Ackerman angles, by producing a front wheel "toe-out" while cornering, permit the front wheels of the car to follow their respective arcs and provide a rolling action for both front wheels instead of a "scruffing" action.

The Ackerman angles are determined by the angular setting of the steering arms and the length of the two track rods, thus any inaccuracy can be attributed to damaged steering arm(s) or track rods of unequal length.

The Ackerman angles are given in the "General Data Section".

To check

1. Prepare the car, check the camber angle and the front wheel alignment, see under their respective headings.
2. Move the car forward onto the turntable gauges and rear wheel ramps; when the front wheels are in the straight ahead attitude, set both turntables gauges to "zero".
3. Turn the steering to the right until the left-hand turntable gauge reads 20°, note the gauge reading of the right-hand turntable.
4. Turn the steering to the left until the right-hand turntable gauge reads 20°, note the gauge reading of the left-hand turntable.
5. When the Ackerman angles are found to be incorrect it suggests that the length of the track rods are unequal or one of both steering arms are bent.

To adjust

1. Slacken off the four ball joint locknuts and detach the ball joints from the steering arms by discarding the split pins, removing the castellated nuts and withdrawing the tapered ball pins using a suitable extractor, Churchill tool No. RG.190.
2. Centralise the steering unit by counting the number of steering wheel turns from lock to lock and then turning the steering wheel back half this amount, from the full lock position. *The steering unit must remain in this position throughout the following operations.*

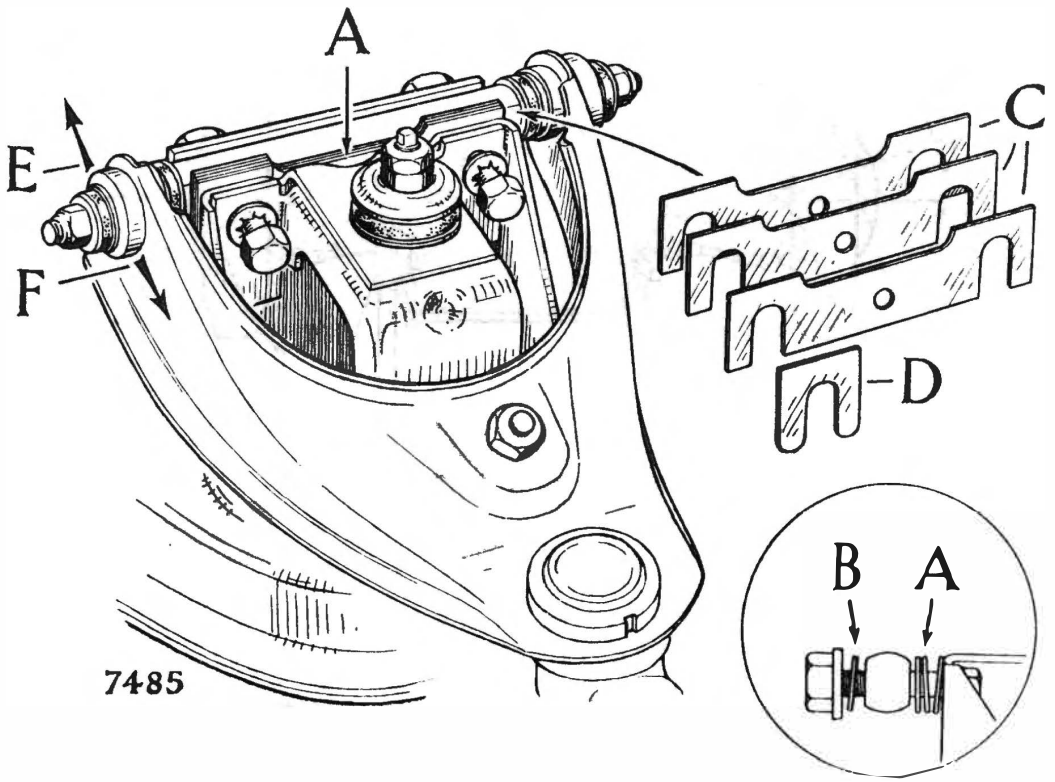

Fig. 8. *Top link showing shim locations*

A POSITION OF CAMBER SHIMS—OUTER
B POSITION OF CAMBER SHIMS—INNER
C CAMBER ADJUSTER SHIMS
D ALIGNMENT SHIMS
E TO DECREASE CAMBER ANGLE
F TO INCREASE CAMBER ANGLE

3. Set both front wheels in the straight ahead attitude by positioning them parallel to the rear wheels and measure the two distances between the centre of each tyre tread and the front centre hole of each bottom link fulcrum pin; *ensure that these distances are equal*, any front wheel misalignment that may be introduced here will be eliminated in a subsequent operation.

4. Adjust the length of both track rods so the two tapered ball pins will freely enter the two steering arms and fit the castellated nuts, do not disturb the position of the front wheels or steering unit.

5. Check and adjust the front wheel alignment only, see under "Front wheel alignment—To check and adjust".

6. Recheck the Ackerman angles as previously described and when they are still found to be incorrect it suggests that one or both steering arms are bent.

7. Fully tighten both ball joint nuts, the castellated nuts and fit new split pins.

8. As the steering wheel may become misaligned, check the horizontal position of the spokes and reset as necessary, see under "Steering wheel—To remove and refit—Steering Gear, Section J".

SHIMS

The shims used in the front suspension assembly are of the two types:—

1. Camber adjustment shims.

   The camber adjustment shims are positioned between the top fulcrum pin and the crossmember, by adding or subtracting the shims, the camber angle can be decreased or increased respectively.

   The shims are available in two thicknesses:—

   (i) ·104 in. (2·6 mm.) equals 30′ } variation in
   (ii) ·064 in. (1·6 mm.) equals 20′ } camber angle

2. Short alignment shims.

   These shims are positioned at either end of the camber adjustment shims only when the need arises to align the two swivel bearings in the outer ends of the links. They must be refitted to their original positions should they ever be removed.

WHEEL LOCK ANGLES

The wheel lock angles are set by a lug cast in the bottom of each stub axle carrier contacting a lever welded onto the top face of each bottom link. The wheel lock angles cannot be adjusted but can be made unequal when the length of the two track rods is unequal.

REMOVING AND REFITTING FRONT SUSPENSION

1. Ensure that the heater temperature control is in the "hot" position or red sector and drain the engine cooling system, salvaging any coolant when it is known to contain an anti-freeze or inhibitor additive; disconnect the top and bottom hoses from the radiator by releasing the hose clips, thus permitting some movement of the engine when it is detached from the crossmember.

2. Apply the handbrake and jack up the front of the car, position two stands one beneath each underframe sidemember, lower the car onto the stands and remove the jack.

3. Remove the two front wheels, detach the two track rods ball joints from the steering arms by discarding the split pins, removing the castellated nuts and withdrawing the tapered ball pins using a suitable extractor, Churchill tool No. RG.190.

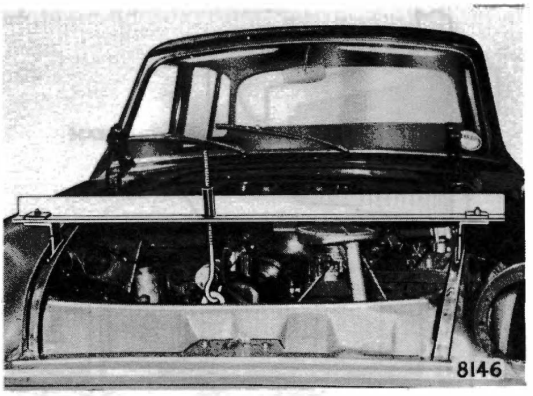

Fig. 9

Showing the special tool, RG.720, in position supporting the engine while the front suspension assembly has been removed, the bonnet has been removed for clarity

4. Disconnect the two front brake pressure pipes by releasing the union nuts and trapping any escaping brake fluid in a drip tray; the right-hand pressure pipe from the flexible hose in the support bracket on the crossmember and the left-hand pressure pipe from the five-way connector inside the engine compartment, the latter pipe is clipped to the rear edge of the crossmember and will be removed with it.

5. Support the engine with the Churchill tool RG.720, see Fig. 9 and detach the front engine mountings from the crossmember by withdrawing two bolts and washers, identify the tappings from which they were removed.

6. Support the crossmember with a trolley jack and wooden beam, withdraw the four crossmember to underframe sidemember bolts; access to these bolts is gained through the holes in the underside of the crossmember.

7. Refitting is the reverse of the removal sequence, but particular attention must be given to the following:—

   (i) When fitting a replacement crossmember cut off the engine tie rod bracket from the rear edge of the crossmember adjacent to the rear end of the right-hand bottom fulcrum pin, the flexible hose support bracket must not be confused with the tie-rod bracket; paint the bare metal.

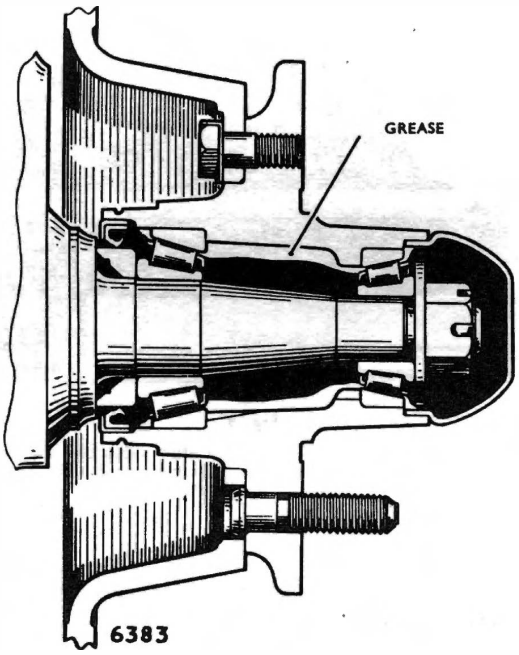

Fig. 10. *Sectional view showing grease level*

(ii) The absence or presence of the castor control wedges on the centre top face of the crossmember is apparent, see under "Castor control wedges".

(iii) Tighten the four crossmember to underframe sidemember bolts progressively to the torque given in the "General Data Section".

(iv) Refit the engine to the crossmember using the two sets of tappings as follows:—

Front tappings of each pair—Minx, Gazelle and Rapier.

Rear tappings of each pair—Super Minx, Vogue and Sceptre.

(v) The brake hydraulic system is bled of air, see under "Bleeding the hydraulic system of air—Brake Section K".

(vi) Refill the engine cooling system and top up with fluid containing the additives as necessary. As the cooling system is pressurised, leaks may not become apparent until after the engine has reached its full working temperature.

CASTOR CONTROL WEDGES

To obtain the necessary castor angle, castor control wedges are, in certain instances, fitted between the centre top face of the crossmember and are only removed when it is necessary to transfer them to a replacement crossmember.

Two types of castor control wedges are used and can be identified to certain cars as follows:—

(i) Longer, fitted thick end to the front of the crossmember on Minx, Gazelle and Rapier cars. The word "*front*" is cast into the thick end of its fitting face.

(ii) Shorter, fitted thick end to the rear of the crossmember on Alpine cars. The word "*rear*" is cast into the thick end of its fitting face.

In no circumstances whatsoever must these castor control wedges be fitted in any other manner.

DISMANTLING AND ASSEMBLING SUSPENSION

(Complete assembly attached to chassis)

To facilitate the servicing of a single component, the dismantling and reassembling of each item is fully described under the appropriate heading. . The dismantling and assembling sequences applies when servicing both sides of the suspension.

FRONT HUB AND BEARINGS

To remove and dismantle

1. Apply the handbrake, jack up the front of the car and remove the front wheel.
2. Remove the brake caliper from the rear face of the stub axle carrier, see under "Brake caliper—To remove and refit—Brakes Section K" and suspend nearby without straining the flexible hose.
3. Prise off the hub cap, discard the split pin, remove the castellated nut and plain washer.
4. Withdraw the hub by hand as an assembly complete with inner and outer bearings and grease seal, holding one hand under the outer end of the hub to trap the outer roller assembly.
5. The larger inner roller assembly can be removed after extracting the grease seal; when new bearings are to be fitted, the outer races of the worn bearings must be removed by ejecting them with a suitable drift.
6. The special distance piece for the wiping edge of the grease seal can now be removed from the stub axle carrier when not already withdrawn with the hub assembly.

To reassemble and refit

1. Check the security of the wheel studs which are a press fit in the hub flange; any wheel stud that is slack must be renewed but when the renewals are no tighter, a new hub must be obtained.
2. When new bearings are necessary press the outer races squarely into their respective ends of the hub, ensuring that the large internal diameters are outwards.
3. Pack the hub and roller assemblies with grease of the correct grade, see under "Recommended Lubricants—Section P". The amount required is one and a half hub capfuls, distributed evenly within the hub between the outer races. *Do not pack the hub cap with grease.*
4. Rest the hub on a clean surface with its inner end upwards and insert the larger inner roller assembly followed by a new grease seal lightly greased and with wiping edge towards the bearings; press into position flush with the end of the hub.
5. Press the special distance piece, bevelled edge upward, into the centre of the grease seal by hand.
6. The smaller roller assembly can now be fitted to the outer end of the hub.
7. Fit the complete hub assembly to the stub axle, holding it in position whilst fitting the washer and the castellated nut.
8. Adjust the end float, see under "To adjust end float", lock the castellated nut with a new split pin and fit the hub cap. *Do not fill the hub cap with grease.*
9. Fit the brake caliper to the rear face of the stub axle carrier, see under "Brake caliper—To remove and refit—Section K". Fit the front wheel and remove the jack.

To adjust end float

It is essential that the end float of the front hub bearings is correct, otherwise the front brake pads will be "knocked back" resulting in reduced brake efficiency.

To obtain the proper conditions the following procedure must be observed.

1. Jack up the front of the car until the front wheel is clear of the ground, remove the nave plate and prise off the hub cap.
2. Discard the split pin, apply a suitable torque wrench to the castellated nut until a torque reading of 15—20 lbs. ft. (2·07—2·76 kg.m.) is obtained, spinning the front wheel simultaneously.
3. Release the nut one to one and a half flats, spin the front wheel and check the end float by using a dial gauge.
4. When the end float is not within the figures given in the "General Data Section", the castellated nut must be further adjusted and the end float again checked with the dial gauge.
5. When the correct end float is obtained, lock the castellated nut with a new split pin and fit the hub cap. *Do not fill the hub cap with grease.* Fit the nave plate and remove the jack.

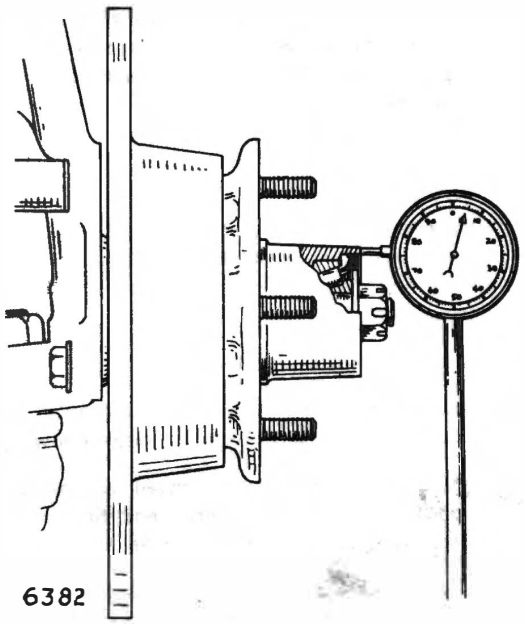

Fig. 11. *Application of dial test indicator to check front hub end float*

FRONT SHOCK ABSORBER

The shock absorbers are sealed units, requiring no maintenance other than checking the mountings and rubber bushes.

To remove and refit

1. Apply the handbrake, jack up the front of the car, remove the front wheel and jack up the bottom link to bring it to the horizontal position.
2. Detach the shock absorber at the top end by removing the two nuts, washers and rubber bush from above the crossmember.

3. Withdraw the shock absorber through the bottom link by removing two nuts and washers from the spring pan, the jack can now be removed from the bottom link.

4. Remove the rubber bush and washers from the top of shock absorber.

5. Remove the bottom mounting from the eye of the shock absorber by withdrawing the nut and bolt; remove the two rubber bushes by ejecting the distance piece.

6. Store in a vertical position.

7. Refitting is the reverse of the removal sequence, but particular attention must be given to the following:—

   (i) The rubber bushes are fitted to the shock absorber eye, long tapered end first and the mounting bracket set at an angle.

   (ii) The shock absorber is fed through the bottom link in its fully extended position so the mounting bracket is inclined downward and outward.

   (iii) The first top nut is tightened until it bottoms and the second nut, locks the first.

Testing by hand

When there is any question of the front suspension not being adequately damped, other factors together with the shock absorbers should be considered. These are:— road springs, tyre pressures, bump rubbers and bump rubber seats.

When a shock absorber does not appear to function satisfactorily, an indication of its condition can be obtained by carrying out the following check:—

1. Remove the shock absorber from the car, see under "Shock absorber—To remove and refit"; position the shock absorber vertically in a vice by gripping the eye between two pieces of wood.

2. Grip the upper end of the piston rod firmly with the hands and operate the shock absorber by moving the rod up and down.

   The presence of air is usually indicated by a lack of resistance or a springy "feel" at the beginning of each stroke. If this is suspected, the shock absorber should be left in a vertical position for a few minutes to allow bubbles of air to collect at the top of the pressure chamber.

3. With the shock absorber still vertical, a few short strokes from the fully compressed position followed by a few slow full strokes should remove all air from the pressure chamber.

   Moderate and even resistance throughout the upward and downward strokes should be felt after expelling the air. If, however, the resistance is slight or erratic and free movement cannot be eliminated then the shock absorber should be renewed.

   It is difficult to form an adequate opinion of the true operational condition of a shock absorber by hand testing. The slow hand speed only partially operates the "bleed" setting within the shock absorber and a large part of the road spring control depends on the high pressure or high speed setting which can only operate while the shock absorber is in service. A new shock absorber may appear to be weak when operated by hand, but this should not always be taken as evidence of a fault.

STABILISER BAR

To remove and refit

1. Do not remove the weight of the car off the front wheels.

2. Remove the stabiliser bar from the front edges of the two bottom links by removing four bolts, nuts, washers, retaining clips and two distance pieces.

3. Remove the four rubber bushes from the stabiliser bar when they are seen to be well worn.

4. Refitting is the reverse of the removal sequence but particular attention must be given to the following:—

   (i) Align the four rubber bushes symmetrically on the stabiliser bar with the four slots in the two bottom links.

   (ii) Compress each of the four retaining clips and rubber bushes with a "G" clamp to insert the bolts.

   (iii) Fit the two distance pieces, one between each outer retaining clip and the underside of the bottom link.

STUB AXLE CARRIER

To remove and refit

1. Apply the handbrake, jack up the front of the car and remove the front wheel.

2. Remove the brake caliper from the rear face of the stub axle carrier, see under "Brake caliper—To remove and refit—Brakes Section K" and suspend nearby without straining the flexible hose, remove the front hub and bearings, see under "Front hub and bearings", remove the brake disc splash guard from the stub axle carrier by withdrawing three bolts and washers.

3. Detach the steering arm from the axle carrier by withdrawing the front bolt and washer.

4. Remove the shock absorber, see under "Shock absorber—To remove and refit".

5. Fit the spring compressor RG.50D in place of the shock absorber and compress the spring until the bottom link is in a horizontal position. The use of a jack as a substitute for the spring compressor RG.50D is a dangerous alternative.

6. Remove the stub axle carrier from the top and bottom swivel bearings by discarding the split pin of the bottom swivel bearing, removing two nuts and withdrawing the tapered ball pins using a suitable extractor, Churchill tool No. RG.191.

7. Refitting is the reverse of the removal sequence, but particular attention must be given to the following:—

   (i) The rear steering arm bolt also attaches the top lug of the brake caliper.

   (ii) The swivel bearing nuts are tightened to the torque specified in "General Data" and a new split pin fitted to the bottom swivel bearing.

   (iii) When a new stub axle carrier has been fitted a full front suspension angle and steering alignment check must be made.

FRONT ROAD SPRING

To remove and refit

1. Apply the handbrake, jack up the front of the car, remove the front wheel and shock absorber, see under "Shock absorber—To remove and refit".

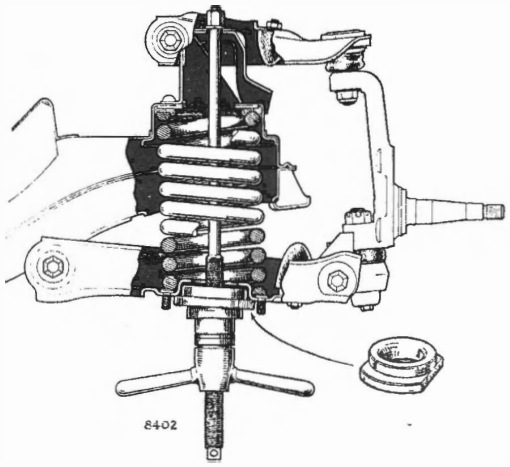

Fig. 12

Front suspension unit in static laden condition with spring compressor RG.50D replacing the shock absorber

2. Fit the spring compressor RG.50D in place of the shock absorber and compress the spring until the bottom link is in the horizontal position. The use of a jack as a substitute for the spring compressor RG.50D is a dangerous alternative.

3. Detach the bottom swivel bearing from the stub axle carrier by discarding the split pin, removing the castellated nut and withdrawing the tapered ball pin using a suitable extractor, Churchill tool No. RG.191.

4. Support the top link and front hub assembly by positioning a small block of wood between the rebound rubber and the crossmember.

5. Detach the bottom link from the crossmember by withdrawing two bolts and washers from each fulcrum pin clamp.

6. Release the spring compressor gradually until the road spring is fully extended, remove the spring compressor, bottom link, spring and insulator.

7. Refitting is the reverse of the removal sequence, but particular attention must be given to the following:—

   (i) The four grooves in the sides of the fulcrum pin accommodate the shanks of the four fulcrum pin attachment bolts.

   (ii) The nut of the swivel bearing and four fulcrum pin bolts are tightened to the torque given in "General Data" and a new split pin is fitted.

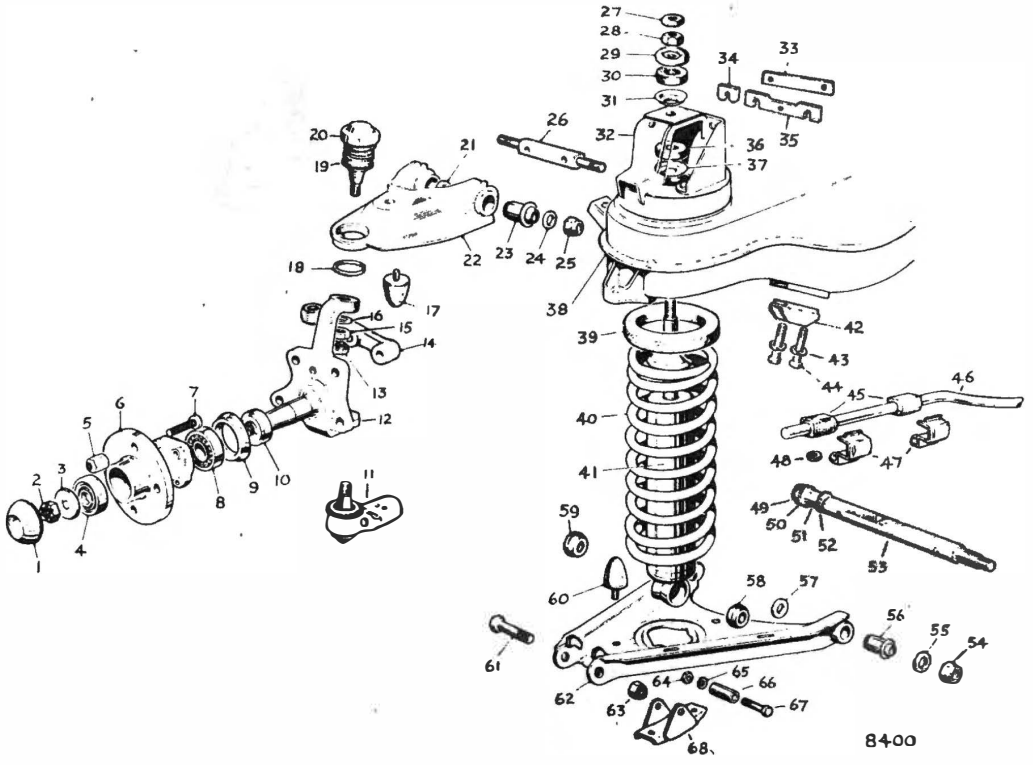

1. HUB CAP
2. CASTELLATED NUT
3. WASHER
4. SMALL ROLLER RACE
5. WHEEL NUT
6. HUB
7. WHEEL STUD
8. LARGE ROLLER RACE
9. GREASE SEAL
10. DISTANCE PIECE
11. BOTTOM SWIVEL BEARING
12. STUB AXLE CARRIER
13. CASTELLATED NUT
14. STEERING ARM
15. NUT
16. WASHER
17. REBOUND RUBBER
18. CIRCLIP
19. DUST COVER
20. TOP SWIVEL BEARING
21. SPECIAL WASHER
22. TOP LINK
23. RUBBER BUSH
24. WASHER
25. FULCRUM PIN NUT
26. TOP FULCRUM PIN
27. LOCKNUT
28. TOP NUT
29. CUP WASHER
30. RUBBER BUSH
31. CUP WASHER
32. SPRING TURRET
33. ATTACHMENT PLATE
34. ALIGNMENT SHIM
35. CAMBER SHIM
36. RUBBER BUSH
37. CUP WASHER
38. CROSSMEMBER
39. INSULATOR
40. SPRING
41. SHOCK ABSORBER
42. CLAMP
43. SPRING WASHER
44. BOLT
45. RUBBER BUSHES
46. STABILISER BAR
47. CLAMPS
48. DISTANCE PIECE
49. FULCRUM PIN NUT
50. WASHER
51. RUBBER BUSH
52. SPECIAL WASHER
53. BOTTOM FULCRUM PIN
54. FULCRUM PIN NUT
55. WASHER
56. RUBBER BUSH
57. SPECIAL WASHER
58. RUBBER BUSH
59. RUBBER BUSH
60. BUMP RUBBER
61. BOLT
62. BOTTOM LINK
63. NUT
64. NUT
65. SPRING WASHER
66. DISTANCE PIECE
67. BOLT
68. MOUNTING BRACKET

Fig. 13. *Exploded view of suspension unit*

Insulators

Insulators, fabricated from hard rubber, are fitted between the top of each spring and the inside of the crossmember. They were introduced at the following chassis numbers:

Minx VI	006002601	Gazelle VI	706000781
Super Minx IV	034002466	Vogue IV	774000747
Rapier V	325000114	Alpine V	395000781
Sceptre II	132000235		

BOTTOM LINK

To remove and refit

The bottom link is removed and refitted in a similar manner to that described under "Front road spring—To remove and refit". When a replacement bottom link is being fitted, the two nuts on the ends of the fulcrum pin must only be tightened when the weight of the car is on the road wheels, see under "Fulcrum pin nuts" and a full front suspension and steering alignment check must be made.

TOP LINK

To remove and refit

1. Apply the handbrake, jack up the front of the car remove the front wheel and shock absorber, see under "Shock absorber—To remove and refit".
2. Fit the spring compressor RG.50D in place of the shock absorber and compress the spring until the bottom link is in the horizontal position. The use of a jack as a substitute for the spring compressor RG.50D is a dangerous alternative.
3. Detach the top swivel bearing from the stub axle carrier by removing the nut and withdrawing the tapered ball pin using a suitable extractor, Churchill tool No. RG.191.
4. Support the stub axle and hub assembly so the flexible hose of the front brake is under no strain.
5. Remove the top link and camber adjustment shims, identifying the position of any short alignment shims, by withdrawing two bolts and washers from the attachment plate.
6. Refitting is the reverse of the removal sequence but particular attention must be given to the following:—
   (i) Ensure that all shims are returned to their original positions.
   (ii) The nut on the swivel bearing and the two fulcrum pin bolts are tightened to the torque given in the "General Data Section".
   (iii) When a replacement top link is being fitted, the two nuts on the ends of the fulcrum pin must only be tightened when the weight of the car is on the road wheels, see under "Fulcrum pin nuts", and a full front suspension and steering check must be made.

DICTIONARY OF TERMS

Top link	= Upper control arm
Bottom link	= Lower control arm
Stub axle carrier	= Steering knuckle
Track rod	= Tie rod
Fulcrum pin	= Control arm pivot shaft
Steering wheel	= Handwheel

SERVICE OPERATIONS

In the following paragraphs service operations covering the front suspension are described in detail.

The special tools necessary in carrying out each operation are listed under the appropriate operational heading.

The removal and refitting of the various components requiring servicing has been dealt with under their respective headings earlier in this Section.

SERVICING FRONT HUBS

The servicing of the front hubs has been described under "Dismantling and assembling suspension", the sequence covers the removing and refitting of the hubs, the fitting of new bearings and end float adjustment.

CHECKING FRONT ROAD SPRINGS

The free lengths and diameters of the front road springs are given in the "General Data Section".

While it is possible to check the front spring heights by taking the height of the car and comparing it with one known to be in excellent condition, the possibility of incorrect spring(s) or packing piece(s) that may be fitted, particularly to unknown second-hand cars, makes the method of checking very unreliable.

ACCIDENTAL DAMAGE

When serious accident damage has occurred to the front suspension, not only must it be removed from the car for examination, the underframe alignment must also be checked; see illustration "Principal underframe dimension—Body Section O".

All damaged and suspected parts must be removed from the crossmember, cleaned and measurements cross checked on a surface table with new parts.

Parts found to be damaged must be discarded and renewed, no attempt must be made to salvage damaged parts by heating and resetting.

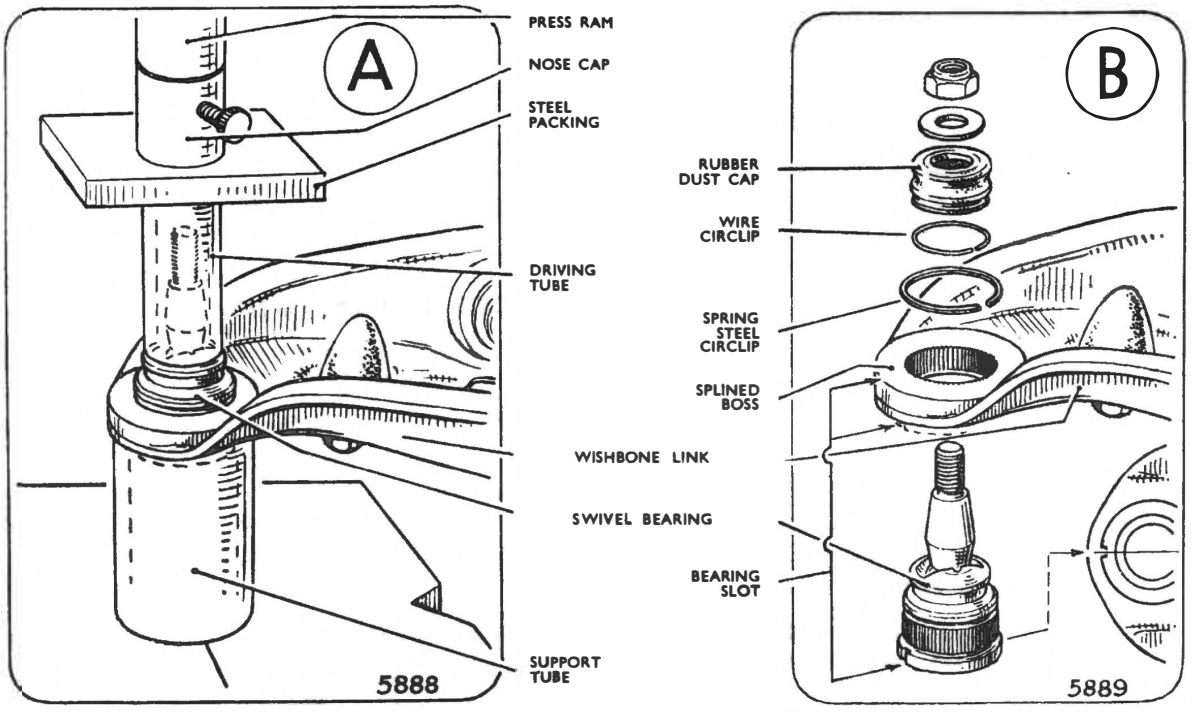

Fig. 14. "A", pressing out top swivel bearing using special tool, RG.319 and "B", showing correct position of alignment slot when refitting

TOP SWIVEL BEARING

To remove and refit

The top swivel bearing cannot be removed and refitted without first removing the top link from the stub axle and crossmember. The head of the swivel bearing body carries a slot which indicates the maximum angular travel of the tapered ball pin and this must always be positioned towards the outside of the link boss furthest from the fulcrum pin.

A workshop press is used in conjunction with the special tool RG.319 and consists of:—

(i) Drive tool

(ii) Support tool

(iii) Replacing tool

1. The top link and camber adjustment shims are removed from the crossmember, see under "Top link—To remove and refit"; support the stub axle and hub assembly so the flexible hose of the front brake is under no strain.

2. Remove the rubber dust cover and washer from the swivel bearing body and tapered pin respectively by releasing the circlip or endless spring.

3. Release the circlip from the swivel bearing body adjacent to the boss in the outer end of the top link.

4. Position the support tool on the press bed and mount the top link above so the tapered ball pin points upwards and the support tool locates the boss on the top face of the link around the swivel bearing body.

5. Position the driving tool over the tapered ball pin so it locates the swivel bearing body; check the vertical alignment of all components beneath the press ram, eject the swivel bearing by applying steady pressure and remove it from the press bed.

6. Refitting is the reverse of the removal sequence, but particular attention must be given to the following:—

   (i) The swivel bearing is fed through the top face of the top link, tapered ball pin first, so the slot in its head is towards the outer edge of the top link opposite to the fulcrum pin.

   (ii) The tapered ball pin is fed into the support tool so the latter locates the boss on the underside face of the link and position the replacing tool on the head of the swivel bearing; check the vertical alignment of all components beneath the press ram, press the swivel bearing into the link boss by applying steady pressure and remove from the press bed.

   (iii) Ensure that the circlip locates the groove in the swivel body adjacent to the boss in the underside of the top link.

   (iv) Locate the washer on the tapered ball pin followed by the rubber dust cover and secure with the wire circlip or endless spring.

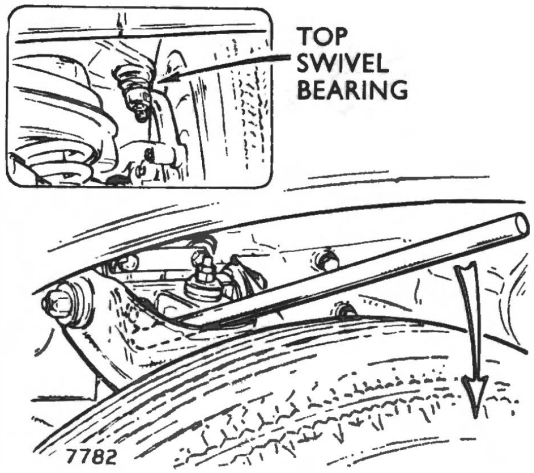

Fig. 15

Showing the bar over the top link and under the attachment bolt and the direction of leverage

BOTTOM SWIVEL BEARING

To remove and refit

1. Apply the handbrake, jack up the front of the car, remove the front wheel and shock absorber, see under "Shock absorber—To remove and refit".

2. Fit the spring compressor RG.50D in place of the shock absorber and compress the spring until the bottom link is in the horizontal position. The use of a jack as a substitute for the spring compressor RG.50D is a dangerous alternative.

3. Detach the bottom swivel bearing from the stub axle carrier by discarding the split pin, removing the castellated nut and withdrawing the tapered ball pin using a suitable extractor; support the top link and hub assembly by positioning a small block of wood between the rebound rubber and its abutment face.

4. Remove the bump rubber from the top face of the bottom link by detaching a nut and washer.

5. Withdraw the bottom swivel bearing from the outer end of the bottom link by removing the horizontal bolt, nut and washer.

6. Refitting is the reverse of the removal sequence, but particular attention must be given to the following:—

   (i) The horizontal bolt through the swivel bearing body is fully tightened after the bump rubber nut has been fully tightened to the torque given in the "General Data Section".

   (ii) The nut on the tapered ball pin of the swivel bearing is tightened to the torque given in the "General Data Section" and a new split pin fitted.

   (iii) A full front suspension and steering check is carried out.

Checking swivel bearings for wear

Top

1. Insert a bar into the top link from above the front wheel so the bar rests under the head of a fulcrum pin bolt and bears again the link pressing.

2. Lever downwards; when any free movement will indicate wear in the top swivel bearing which must be renewed.

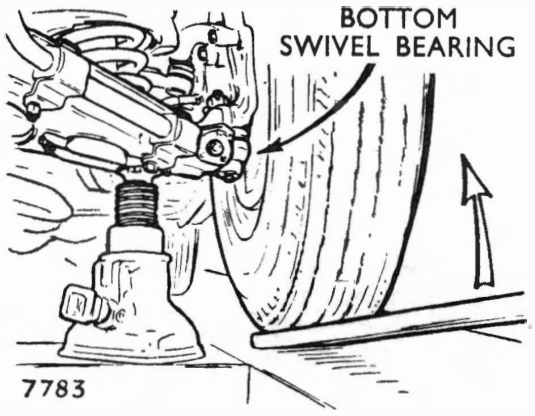

Fig. 16

Showing the jack beneath the bottom link, the bar between the front wheel and the ground

Bottom

1. Apply the front brakes by blocking the brake pedal in the down position, jack up the bottom link until the front wheel is clear of the ground and insert a bar between the ground and the tyre.

2. Lever upwards, when any free movement will indicate wear in the bottom swivel bearing which must be renewed.

LINK BUSHES

To renew the link bushes a workshop press is required to eject and fit the link bushes and no attempt must be made to remove or refit the link bushes without supporting the arms of the top or bottom links. A special tool, RG.318, is available for this purpose and consists of:—

(i) Plain support tool

(ii) Slotted support tool

(iii) Driving tool

(iv) Mushroom driver

Two of the tools are plain and one is slotted. The slot allows the fitting of the tool around the fulcrum pin when fitting the link bushes. The sequences are the same for both top and bottom links.

To renew

1. Remove the link from the crossmember as described under the appropriate heading; in the instance of the bottom link identify one end of the fulcrum pin to the link arm.

2. Remove the self-locking nuts and plain washers from both ends of the fulcrum pin.

3. Position the plain support tool on the press bed and mount the link above with the fulcrum pin vertical and with the plain support tool locating the outer face of the link arm boss around the link bush.

4. Position the mushroom driver between the press ram and the threaded end of the fulcrum pin, as illustrated at "A"; check the vertical alignment of all components, eject the link bush and fulcrum pin from the link arm by applying steady pressure and remove the link from the press bed.

5. Remove the link bush and special washer from the protruding end of the fulcrum pin, return the fulcrum pin and one special washer into the remaining link bush and invert the link.

6. Eject the remaining link bush from the opposite link arm as previously described in paragrah 3 onwards as illustrated at "B"; discard the used link bushes and special washers.

7. Using packing blocks to form a bridge below the press ram, set up the link so the slotted support tool locates the inner face of one link arm boss, the opposite link arm boss will be below the bridge of packing blocks and position the link bush squarely above; position the driving tool between the press ram and the link bush, as illustrated at "C", check the vertical alignment of all components, press the link bush into the link arm boss by applying steady pressure and remove the link from the press bed.

8. Fit the two special washers to the fulcrum pin, chamfered face first and when dealing with the bottom link instal the fulcrum pin into the bush and link according to the identification markings, i.e., so that the greater dimension between the special washer and the side grooves in the fulcrum pin is nearer the link arm without the elongated holes for the stabiliser clamps.

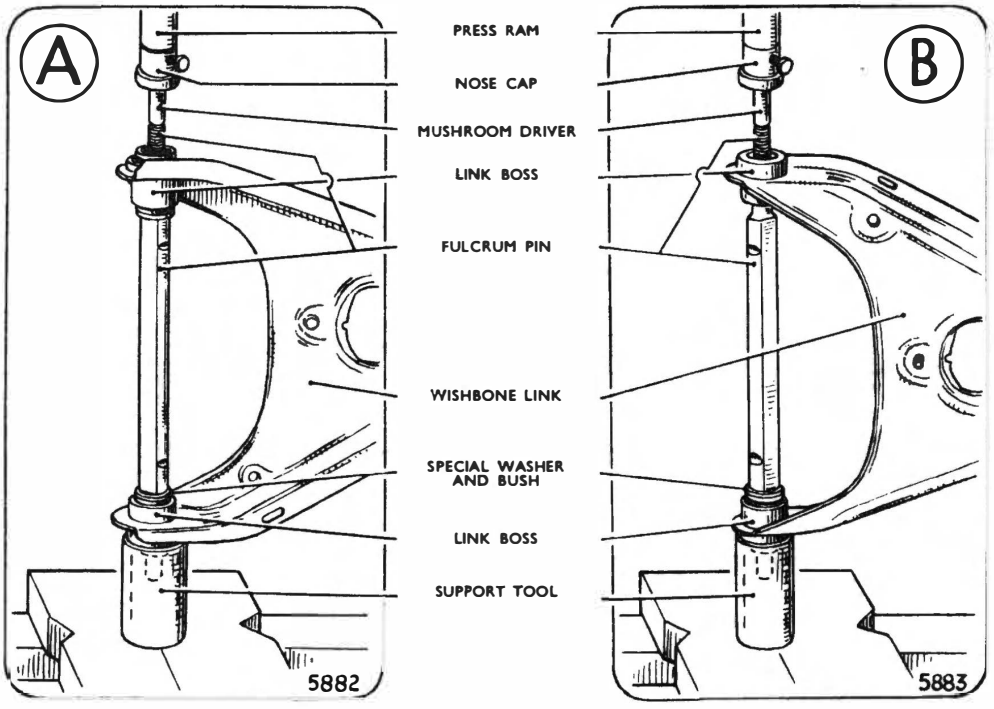

Fig. 17. *"A", pressing out one link bush; "B", pressing out the opposite link bush using a workshop press and special tool, RG.318*

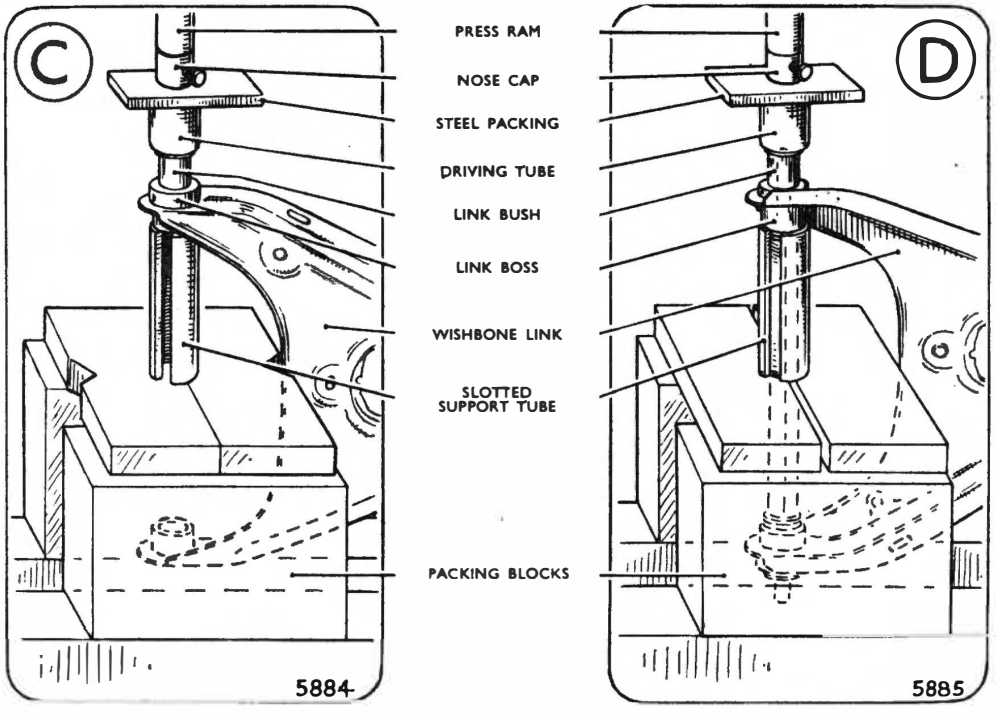

Fig. 18. *"C", pressing in one link bush, note the bridge of packing blocks to provide clearance for the opposite link arm; "D", pressing the link bush into the opposite link arm, note the position of the slotted support tube around the fulcrum pin*

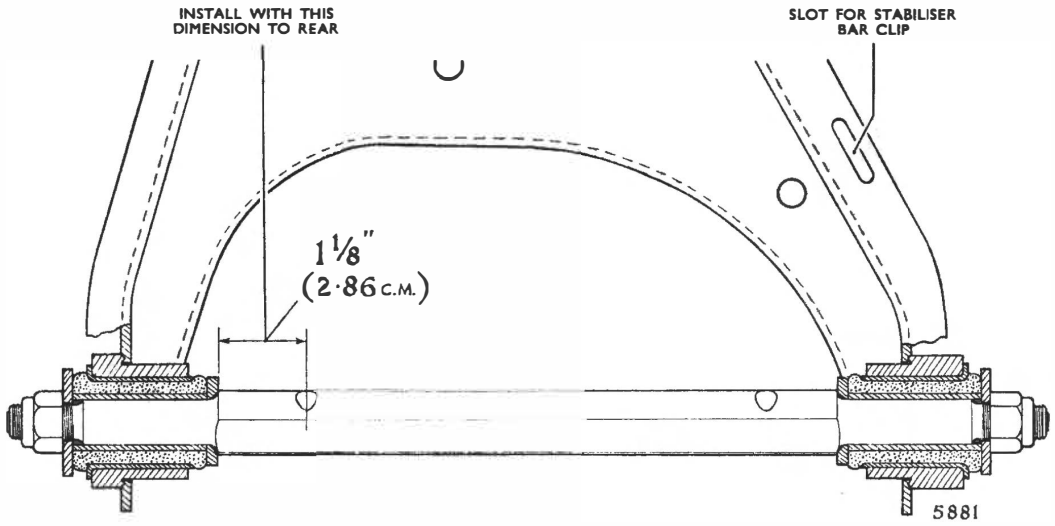

Fig. 19. *Part sectional view of the bottom link and bushes showing the correct position of the special washers, and fulcrum pin relative to the trailing edge of the bottom link*

9. Press the second link bush into the opposite link arm as previously described in paragraph 7 onwards, but in this instance it will be necessary to re-arrange the packing blocks as illustrated at "D".

10. Fit the plain washers and self-locking nuts to the fulcrum pins but do not fully tighten at this juncture, see under "Fulcrum pin nuts".

Fulcrum pin nuts

The fulcrum pin nuts must be left slack while fitting new fulcrum pins or link bushes to the top or bottom links and tightened only when the top or bottom link is fitted to the car and with the weight of the car on the road wheels.

Failure to observe this instruction will cause the premature failure of the metal and rubber-bonded link bushes as they will be subjected to torsional stresses for which they were not designed to accommodate.

GAP GAUGES

FRONT

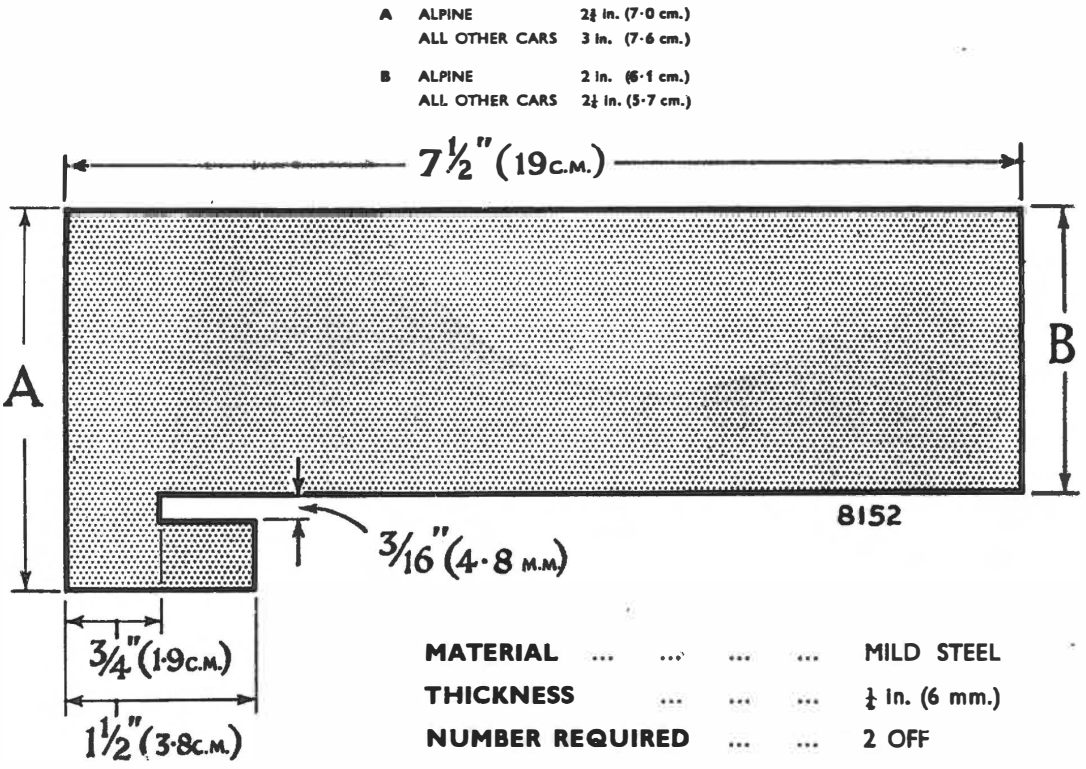

Fig. 20. *Details of metal front gap gauges. Churchill tool No. RG.403 for Alpine cars, and RG.404 for all other cars*

REAR

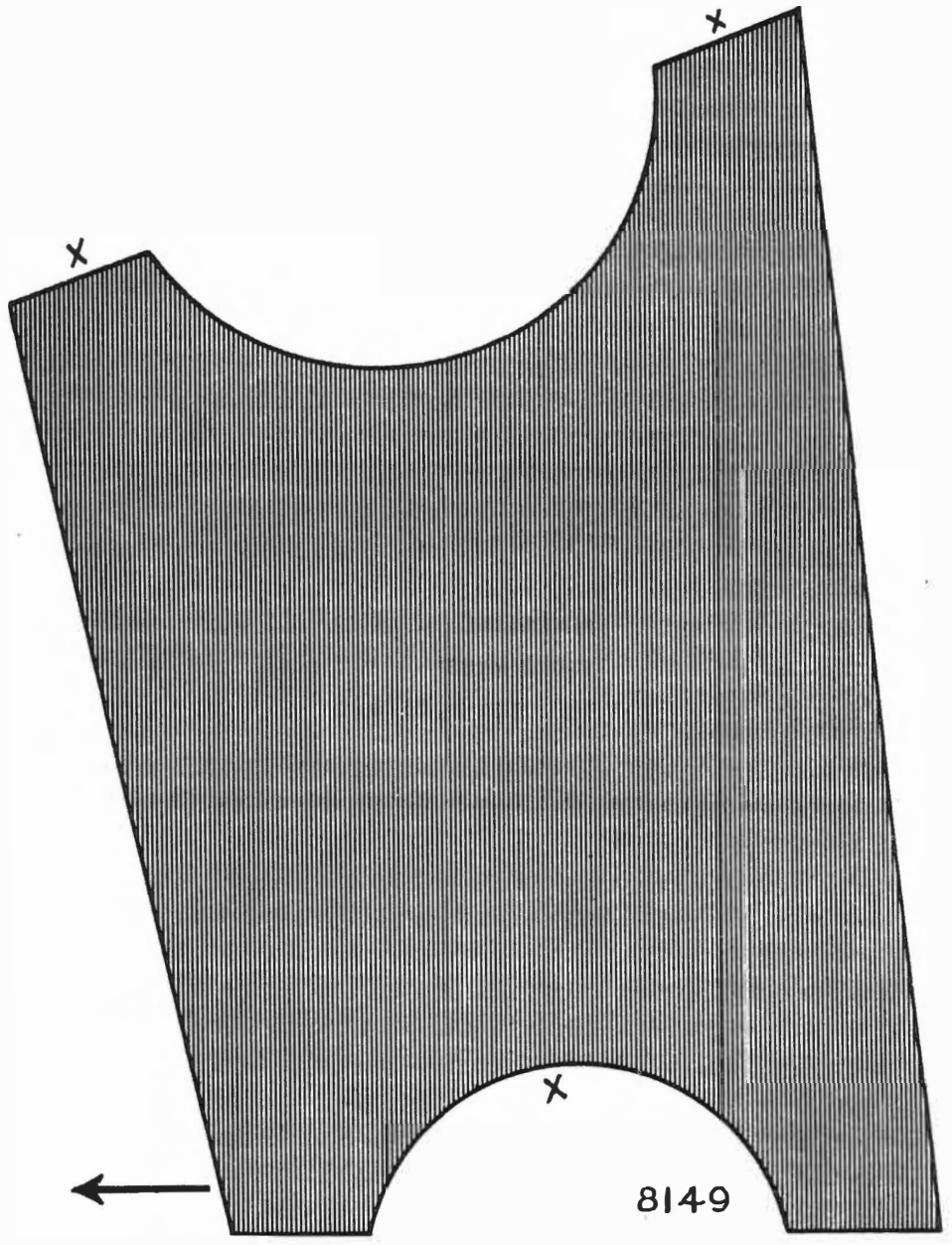

Fig. 21. *Wooden rear gap gauge for Minx, Gazelle and Rapier cars, fabricated from 1 in. (2·5 cm.) thick hardwood by glueing a carefully drawn tracing of this illustration to the wood and then cutting out with a suitable saw, the critical faces are marked with an "X"*

REAR

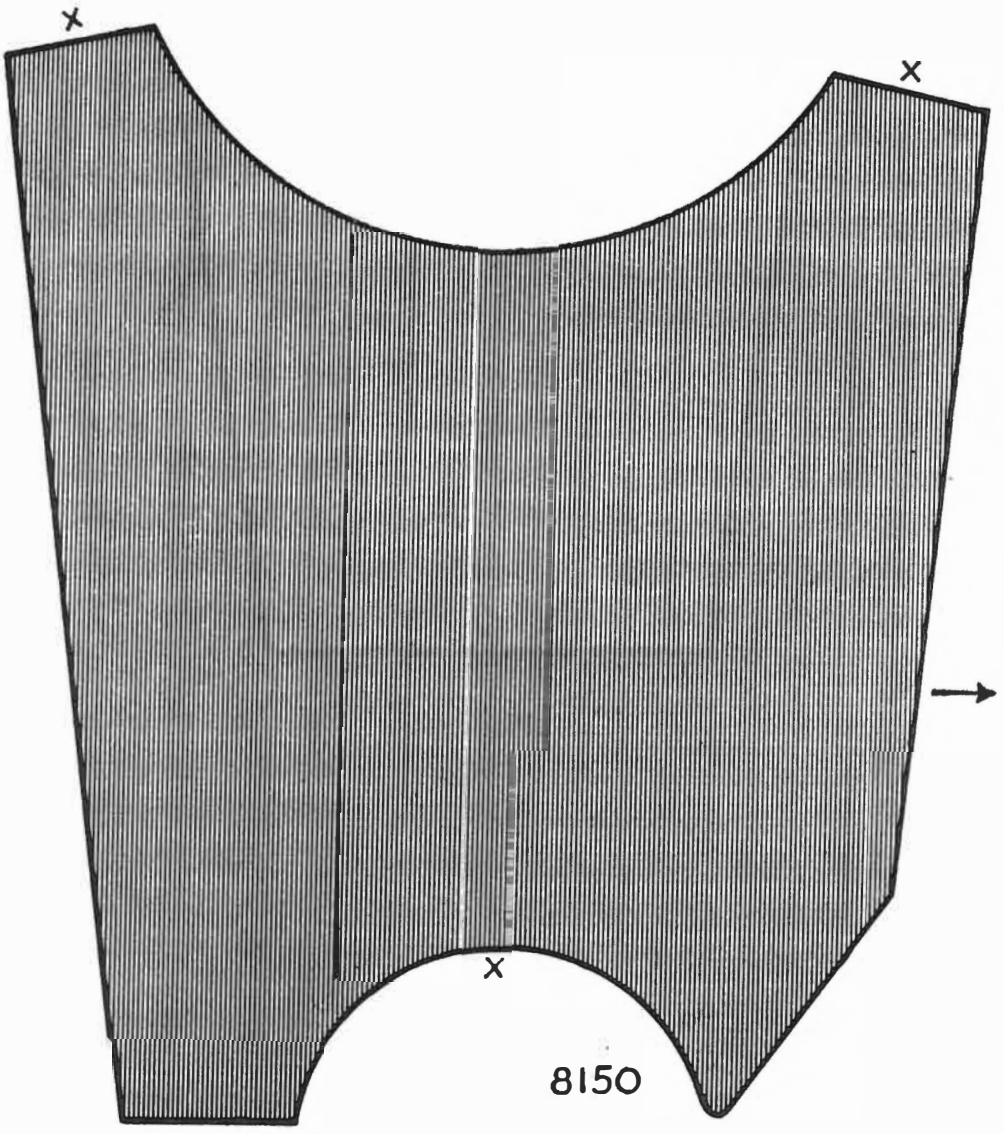

Fig. 22. *Wooden rear gap gauge for Alpine cars, fabricated from 1 in. (2·5 cm.) thick hardwood by glueing a carefully drawn tracing of this illustration to the wood and then cutting out with a suitable saw, the critical faces are marked with an "X"*

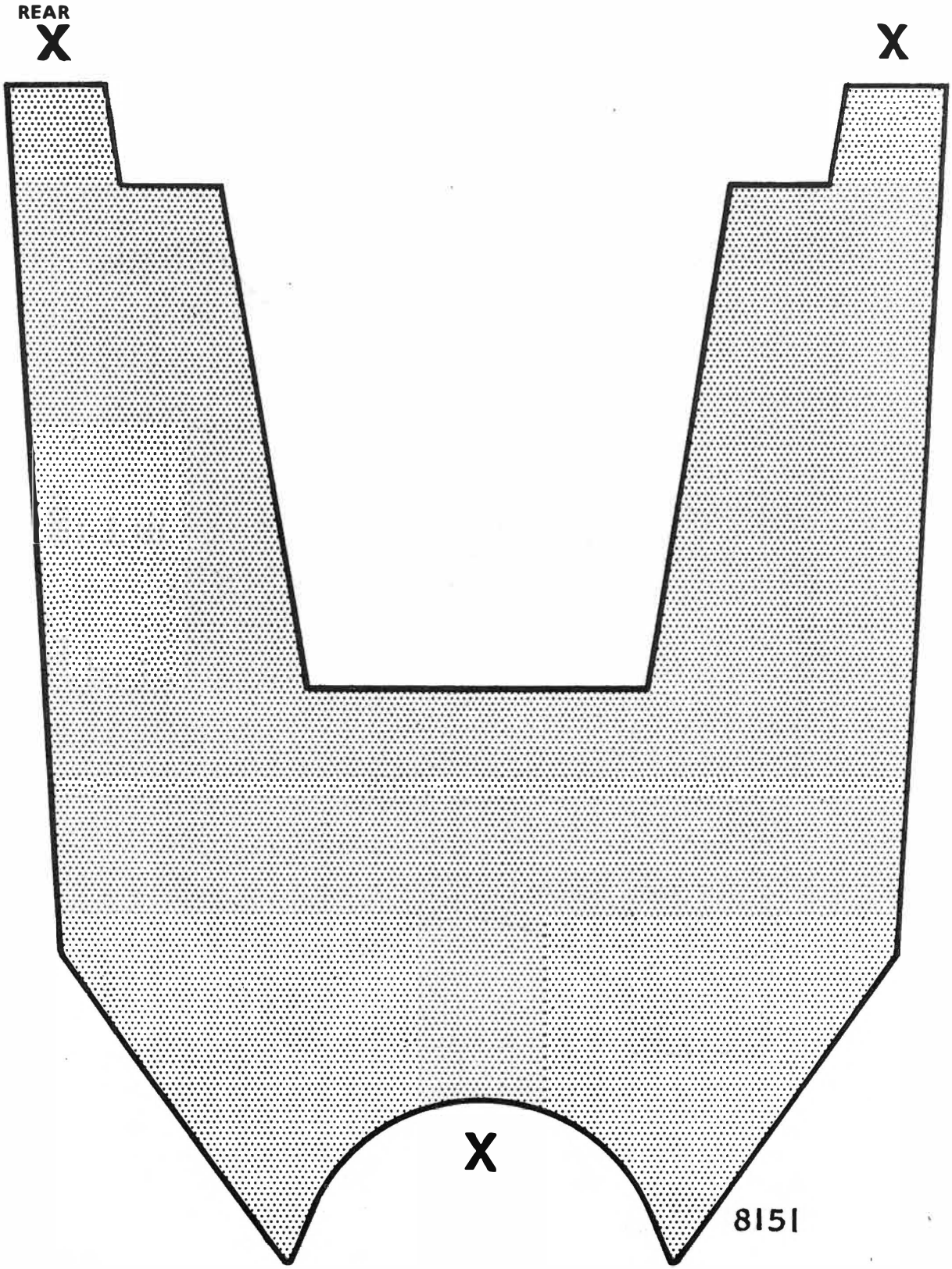

Fig. 23. *Wooden rear gap gauge for Super Minx, Vogue and Sceptre cars, fabricated from 1 in. (2·5 cm.) thick hardwood by glueing a carefully drawn tracing of this illustration to the wood and then cutting out with a suitable saw, the critical faces are marked with an "X"*

REAR AXLE

SECTION G

CONTENTS

Page

Description ... 3

AXLE SHAFT

—To remove ... 4

—To refit ... 4

—To remove and refit hub bearings ... 5

—Sludge guards (oil retainers) ... 3

BEVEL PINION

—To dismantle ... 6

—To adjust ... 7

—Oil seal ... 3

DIFFERENTIAL UNIT

—To remove and refit ... 6

—To dismantle and reassemble ... 6

—To adjust and refit ... 9

—Measurements of bearings ... 12

REAR AXLE

—To remove and refit ... 12

—Breather ... 12

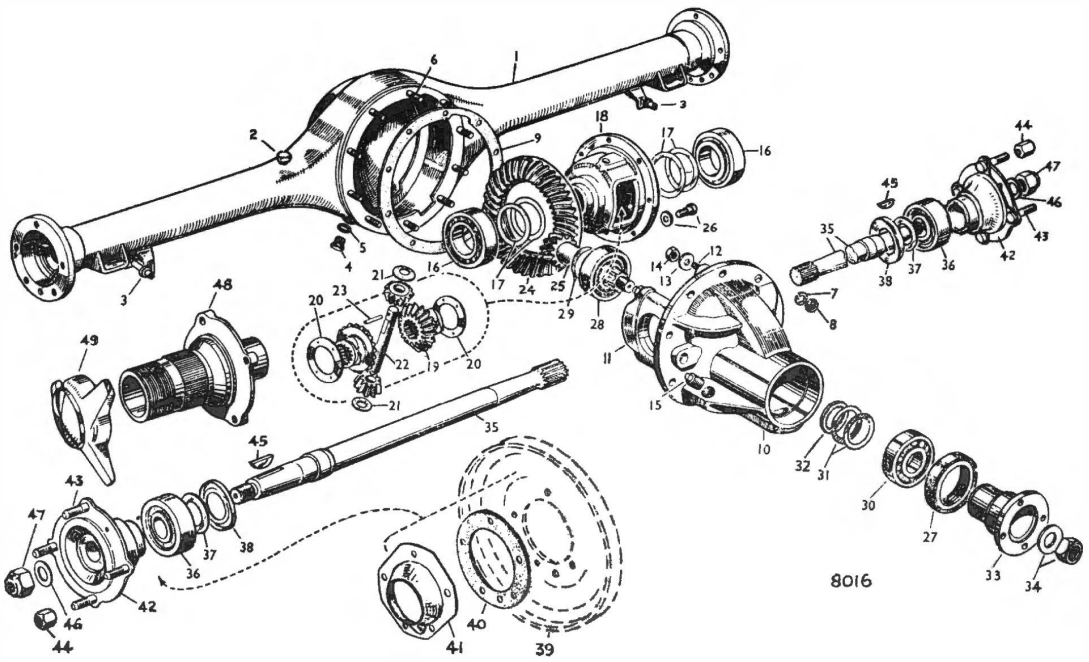

Fig. 1. *Exploded view of rear axle*

1. AXLE CASING
2. BREATHER
3. SHOCK ABSORBER MOUNTING
4. DRAIN PLUG
5. WASHER
6. STUD
7. SPRING WASHER
8. NUT
9. GASKET
10. DIFFERENTIAL HOUSING
11. BEARING CAPS
12. STUD
13. WASHER
14. NUT
15. LEVEL/FILLER PLUG
16. DIFFERENTIAL BEARING
17. SHIMS
18. DIFFERENTIAL BOX
19. DIFFERENTIAL PINION
20. THRUST WASHER
21. THRUST WASHER
22. CROSS PIN
23. LOCK PIN
24. CROWN WHEEL
25. DRIVING PINION
26. LOCK WASHER AND BOLT
27. OIL SEAL
28. INNER BEARING
29. SHIMS
30. OUTER BEARING
31. SHIMS
32. SHIM ABUTMENT WASHER
33. DRIVER COUPLING
34. NUT AND WASHER
35. AXLE SHAFT
36. BEARING/OIL SEAL
37. SLUDGE GUARD INNER
38. SLUDGE GUARD OUTER
39. BACKING PLATE
40. GASKETS
41. DUST COVER
42. HUB
43. WHEEL STUD
44. WHEEL NUT
45. KEY
46. WASHER
47. HUB NUT
48. HUB, WIRE WHEELS
49. QUICK RELEASE HUB NUT

REAR AXLE

DESCRIPTION

The rear axle is of the semi-floating type, with detachable taper and key fitting rear hubs, incorporating a hypoid bevel differential.

In design it is essentially straightforward, but as the position of the pinion relative to the crown wheel requires accurate adjustment, involving the use of special tools, it should remain undisturbed as far as possible.

Crown wheel and pinion adjustment is provided for by the positioning of shims adjacent to the bearings carrying the differential housing and the bevel pinion shaft, and described in detail in this Section. The complete differential assembly is detachable from the axle casing after removal of the axle shafts.

The axle shafts are fully machined and supported at the outer ends on sealed bearings, which also incorporate an oil seal.

Bevel pinion oil seal

In the bevel pinion housing, an oil seal is provided just to the rear of the propeller shaft coupling.

When a replacement oil seal is fitted, the outside of the cage should be coated with jointing compound and the inner sealing face smeared with oil or grease.

These seals operate in one direction and must be fitted with the lip facing the differential assembly.

Sludge guards (oil retainers)

A sludge guard, consisting of an outer ring fitted into a recess in the axle casing, is overlapped by an inner ring sandwiched between the bearing inner track and the abutment ring on the axle shaft.

The oil seal is an integral part of the sealed hub bearing and operates between the inner and outer tracks of the bearing.

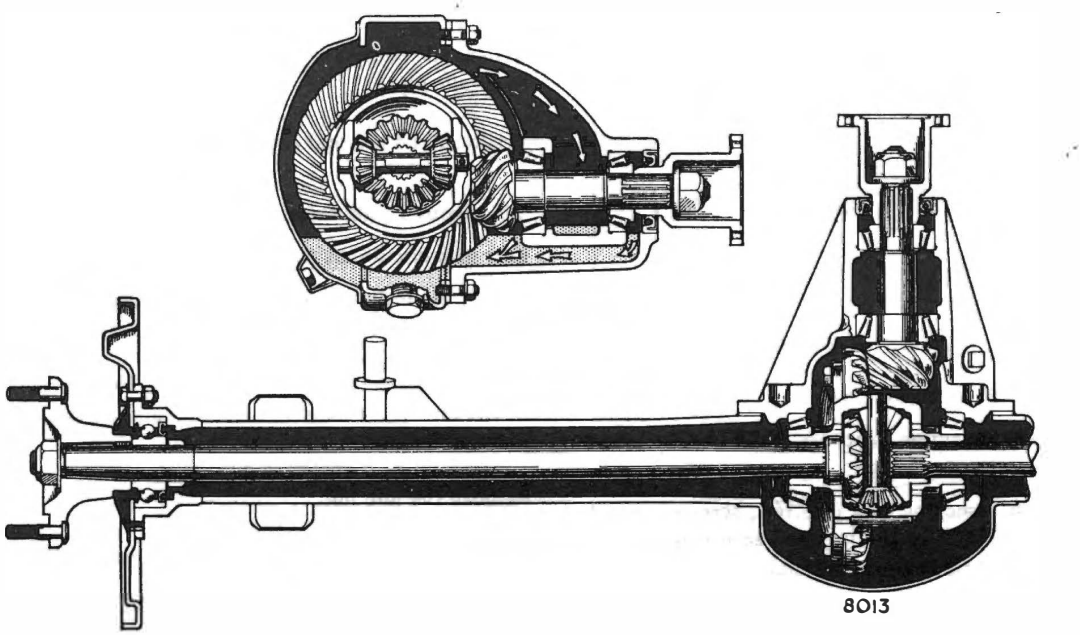

Fig. 2. *Sectional view of rear axle*

Two types of hub bearing may be fitted in production, one of which has an "O" ring in a groove round the outer periphery of the outer track. The two types of bearing with integral oil seal are interchangeable. *It must be noted that the axle shafts, hub assemblies and bearings for this axle are not interchangeable with the axles fitted to earlier models.*

AXLE SHAFT

To remove

Serious damage will result from any attempt to remove an axle shaft by any method other than the following:—

Remove road wheel.

Clean off all road dirt from the brake backing plate and axle flange.

Remove setscrew securing brake drum and remove drum.

Remove clevis pin from handbrake linkage and disconnect hydraulic line.

Protect the hydraulic connections from the ingress of foreign matter.

Remove nuts and bolts securing back plate to axle flange.

Cars with disc wheels

Fit the shaft removing tool (RG.16A screwed into hub remover RG.188D) over the four wheel studs and secure by using the wheel nuts, flat side against the tool.

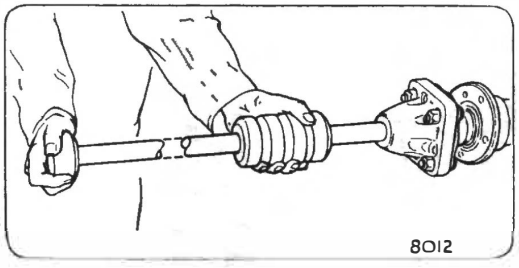

Fig. 3. *Removal tool RG.16-A with RG188D*

Cars with centre-lock wire wheels

Fit the four extension adaptors (RG.16A–5A) into the brake drum securing holes.

Fit the shaft removing tool (RG.16A, screwed into hub remover RG.188D) to the legs and secure by using the wheel nuts, flat side against the tool.

Move the sliding weight sharply along the shaft of the tool, against the outer abutment, to draw the shaft out of the casing.

Remove the shaft complete with the back plate, integral bearing/oil seal, inner sludge guard and hub.

Remove outer sludge guard from the recess in the axle casing.

To refit

Renew all joint washers. It is essential that the bearing, axle casing and brake back plate are clean during assembly.

Fit the outer member of the sludge guard into the bearing recess in the axle casing, open side outwards.

Pass the shaft into the casing and ease the splines into mesh with those in the differential side gears.

Pushing the shaft inwards, enter the bearing into the recess in the axle casing and carefully drive the assembly inwards until the bearing outer face is flush with the end of the casing.

Ensuring that all remaining parts are clean, fit the back plate and dust shield.

Fit the back plate bolts and nuts, tighten fully, but evenly and diagonally.

There are no dowel bolts or dowel holes in this assembly.

When all bolts are tight, refit the brake gear and hydraulic pipes.

Finally, bleed the brakes (See Section K).

To remove hub from axle shaft

Cars with disc wheels (see *Fig. 4*)

Attach securing plate, part of RG.188D, to the wheel studs, using the existing wheel nuts, flat side to the tool.

Lock by means of a tommy bar if the axle is still fitted to the car. If the axle is removed from the car, lock the plate in the vice.

Remove the hub nut.

Remove the securing plate and fit hub remover RG.188D over the wheel studs.

Fit the protector sleeve over the shaft thread and secure the tool with the wheel nuts.

Cars with centre-lock wire wheels

Attach the securing plate to the hub with the setscrews supplied.

Lock the plate with a tommy bar, if the axle is still fitted to the car.

If the axle is removed from the car, lock the plate in a vice.

Remove the hub nut.

Remove the securing plate and fit the four extension adaptors, RG.16A–5A, to the hub by screwing into the brake drum securing holes.

Place the long protector sleeve over shaft thread, fit the hub remover, RG.188D, to extension adaptors and secure with the wheel nuts.

Screw in the centre bolt of the tool until tight, then smartly tap the end of the hub remover bolt.

Remove hub and hub remover.

Remove dust shield and back plate, remove key from axle shaft.

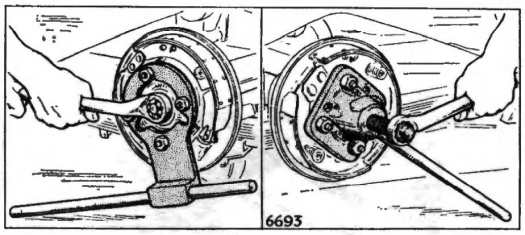

Fig. 4. *Removing rear hub*

To remove rear hub bearings (See Fig. 5)

Withdraw axle shaft and dismantle. (See "Axle shaft—To remove").

Slide the remover plate (Part of tool RG.188D–1A) over the splined end of the axle shaft, until the plate locates on the hub bearing inner race.

Screw in the four extension adaptors (RG.16A–5A) and fit the hub remover and short protector.

Rotate the centre bolt of the hub remover and draw the bearing off the axle shaft.

As the oil seal is integral with the bearing, the complete bearing must be changed should it become necessary to change the oil seal.

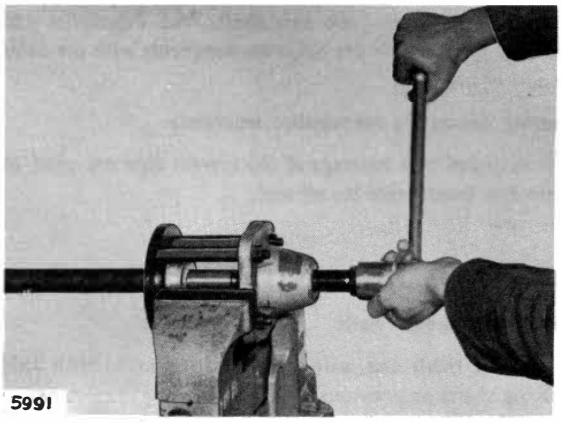

Fig. 5. *Removing hub bearing*

To refit

The lateral location of the hub bearing is controlled by a sleeve on the inner side of the bearing, against which the latter is located by the hub when fully positioned on the taper of the shaft.

It is essential that when new bearings are fitted, or old ones replaced, that the inner race should be compressed between the sleeve and the hub.

When fitting a bearing, therefore, the following procedure must be adopted:—

Slide the remover plate and hub remover assembly over the axle shaft from the tapered end.

Fit the split bush (Part of RG.188D–1A) to the remover plate, with the flanged side of the bush butting behind the sleeve.

Fit the short protector over the axle shaft threads.

Rotate the centre bolt of the hub remover until the sleeve has been pulled $\frac{1}{32}$ in. (·8 mm.) towards the outer end of the axle shaft.

Remove the tool, fit the inner sludge guard and bearing/oil seal to the axle shaft.

Be sure to fit the bearing with the oil seal inwards.

Press the bearing on the shaft until the inner sludge guard is just nipped.

Fit the back plate and dust cover, fit the key and hub, then fit the securing plate over the wheel studs using the wheel nuts to secure the tool. Use the setscrews provided for wire wheel hubs.

Place the whole assembly in a vice, fit the nut and washer and torque to the figure given in General Data.

Check that compression of the bearing is obtained by attempting to rotate the inner sludge guard.

The assembly can now be fitted to the axle casing. (See "Axle shaft—To refit").

It must be noted that the axle shafts, hub assemblies and bearings for this axle are not interchangeable with the axles on earlier models.

Bearing sleeves are not supplied separately.

It is essential that bearings of the correct type are used, as these also incorporate the oil seal.

DIFFERENTIAL UNIT

To remove and refit

Drain oil from the axle case and remove both axle driving shafts as previously described.

Disconnect propeller shaft from rear axle coupling.

Remove the nuts and washers securing the differential housing to axle casing and lift out assembly.

When replacing the assembly, the operations are a reversal of the above.

All joint faces must be clean and free of burrs.

Use new joints and coat the mating faces with Hylomar jointing compound.

Bleed the brakes on completion of the axle assembly. (See Section K).

To dismantle and reassemble

Remove assembly from axle casing as previously described.

Remove caps (11, Fig. 1) over differential bearings and ensure that they are not interchanged.

Lift off the differential assembly complete with crown wheel and bearings, taking care that the outer races of the bearings are not interchanged.

Remove the crown wheel by releasing the lockwashers and withdrawing the eight setscrews (26).

Knock out taper pin (23) securing cross-pin (22) in differential box.

Push out cross-pin, then the differential pinions complete with thrust washers (21) can be carried round and brought out through the opening in the differential box.

On no account should any attempt be made to remove the cross-pin (22) without first removing the crown wheel, as removal of the cross-pin is obstructed by the teeth of the crown wheel.

The differential wheels and thrust washers can now be taken out through the same openings.

Reverse the foregoing procedure for reassembly, with careful attention to the following points:—

1. The faces of both crown wheel and differential box should be thoroughly clean and free from burrs or bruises, otherwise there is every possibility of misalignment after assembly.
2. The lockwashers for the eight setscrews must be renewed and the setscrews tightened to the torque figure given in General Data.
3. The bearing cap nuts must be tightened to the torque figure given in General Data.
4. Mount a dial indicator on the casing with the stylus against the back face of the crown wheel. Check for run-out by rotating the crown wheel. This must not exceed ·003 in. (·8 mm.).

If bearings on crown wheel and pinion are renewed, refer to the following paragraphs:—

If it is necessary to renew the differential bearings, the old inner races may be removed by using V.L.C. tool RG.4221B and adaptor RG.4221B–20. (See Fig. 6).

The inner and outer sections of these bearings must be renewed as a pair.

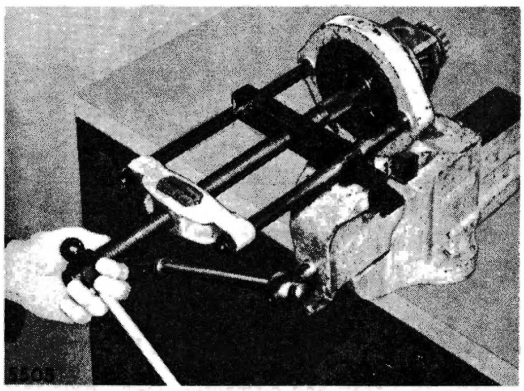

Fig. 6. *Removing differential bearing*

BEVEL PINION

To dismantle

Remove the differential unit from the axle complete with crown wheel and bearings as previously described.

Lock the propeller shaft coupling with V.L.C. tool RG.421. Remove the nut and washer and draw the coupling off the pinion shaft.

Tap the bevel pinion rearwards out of the housing, using a soft metal drift.

The inner bearing race and shims will be detached with the pinion.

To remove the inner bearing race from the pinion shaft, a hand press, RG.4221B, or a press and V.L.C. taper base 370, will be required. (See Fig. 7).

Support the inner race by means of the adaptor RG.4221B–21 and apply pressure to the threaded end of the shaft. Remove the shims but do not discard them.

Remove the oil seal and outer bearing race from the front of the housing.

If new bearings are required, the old bearing outer tracks may be removed and new tracks fitted, using V.L.C. tools RG.447 and RG.448.

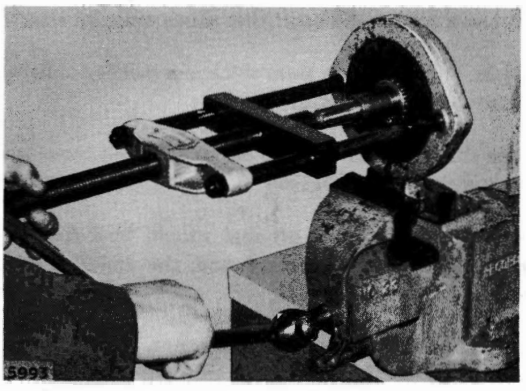

Fig. 7. *Removing pinion inner bearing*

To adjust

The bevel pinion must be correctly adjusted in two respects:—

1. Position of the pinion relative to the axis of the crown wheel.

2. Pre-load of the bearings.

To obtain the degree of accuracy necessary, V.L.C. kit RG.295B will be required.

To adjust position of pinion relative to the crown wheel axis (Figs. 10 and 12). Note in Fig. 8 the shim positions denoted A and B.

During assembly, a small number of each of the following shims will be required:—

9071049	·003 in. (·08 mm.)	Shims A
9071050	·005 in. (·13 mm.)	
9071051	·010 in. (·25 mm.)	
9071132	·020 in. (·50 mm.)	
9071147	·003 in. (·08 mm.)	Shims B
9071148	·005 in. (·13 mm.)	
9071149	·010 in. (·25 mm.)	
9071133	·020 in. (·50 mm.)	

Take the dummy pinion shaft and place on it the inner pinion bearing.

DO NOT FIT ANY SHIMS BETWEEN THE BEARING AND THE PINION HEAD.

Insert the assembly into the casing and fit the outer bearing, coupling, washer and dummy nut.

Progressively tighten the dummy nut to absorb all end float, until a slight resistance to turning is felt.

Fit the dummy bearings into the differential housing and fit the mandrel through them.

Replace the two bearing caps and tighten the four securing nuts.

Using feeler gauges, measure the gap between the end of the dummy pinion shaft and the mandrel. (See Fig. 10).

Note any measurement engraved on the head of the actual pinion.

This figure shows, in thousandths of an inch, any variation in the position of the tooth form relative to the rear bearing shoulder, which has occurred during manufacture.

If no figure is marked, this indicates a zero reading requiring no correction to the calculation.

Any letters engraved on the head are for production purposes only and may be ignored.

If this figure is preceded by a negative sign —, ADD this amount to the gap measurement taken. If the figure has a positive sign +, SUBTRACT the amount from the gap measurement.

The resulting dimension would be the thickness of shims to be added to the actual pinion at point B (Fig. 12) to position the pinion relative to the crown wheel axis.

In practice, however, it is found that as the bearing is pressed on to the actual pinion, the bearing alters in length approximately ·002 in. (·05 mm.). Therefore, ·002 in. (·05 mm.) must be subtracted from the shim thickness required at point B.

Remove the dummy pinion from the casing.

Place the shims B on the actual pinion and press the inner bearing, lightly oiled, into place, using the hand press RG.4221B and adaptor RG.4221B-21, or a press and V.L.C. taper base 370.

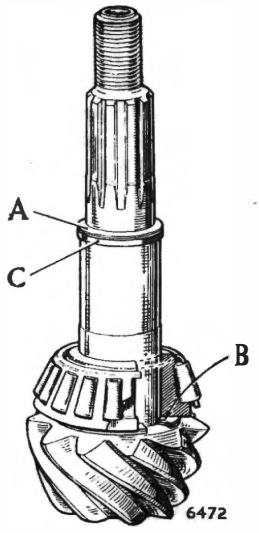

Fig. 8. *Pinion shims and abutment washer*

Fit the shim abutment washer, bevelled edge towards the shoulder (C, Fig. 8).

Place onto point A on the actual pinion, the same thickness of shims as at point B and ADD ·018 in. (·46 mm.).

Insert the pinion into the casing and fit the outer bearing, lightly oiled.

DO NOT fit the oil seal at this stage.

Replace the coupling, nut and washer.

To obtain pre-load

Pre-load is obtained when a resistance is felt to turning, while rotating the coupling by hand with the nut tightened to the torque given in General Data.

Rotate the pinion and tighten the nut progressively.

FAILURE TO ROTATE THE PINION MAY LEAD TO FALSE PRE-LOAD OR BEARING DAMAGE.

If the pinion becomes excessively tight before the nut is tightened to the correct torque, additional shims are required at point A.

If the correct torque is reached and no resistance is felt on the coupling, shims must be removed from point A.

To test for correct pre-load

The pre-load is assessed by measuring the torque required to rotate the shaft.

The torque should be 6—12 lbs/in. (·07—·14 kg/m.) for new bearings, or 4—8 lbs/in. (·05—·09 kg/m.) for the original bearings.

The torque can be checked using a 3 ft. (1 metre) length of cord attached to a spring balance.

Take four or five turns of the cord round the coupling as shown in Fig. 9. Rotate the coupling by pulling on the spring balance.

Note the reading when the coupling is rotating, NOT as the coupling starts to rotate.

The reading on the scale should be 6—12 lbs. (2·7—5·4 kgs.) for new bearings, or 4—8 lbs. (1·8—3·6 kgs.) for the original bearings.

Too high a torque indicates that more shims must be added to point A.

Too low a torque indicates that shims must be removed.

·001 in. (·025 mm.) in shim thickness makes a difference of approximately 4 lbs. (1·8 kgs.).

When the torque is correct, remove the nut, washer and coupling and fit the oil seal.

The outer case of the oil seal should be coated with Hylomar jointing compound and the inner seal face smeared with oil or grease.

Fit the coupling, washer and a new nut.

Tighten the nut to the torque figure given in General Data.

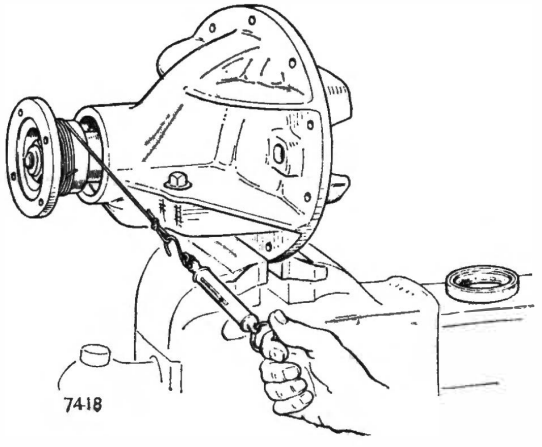

Fig. 9. *Checking torque loading (pre-load) for pinion bearings*

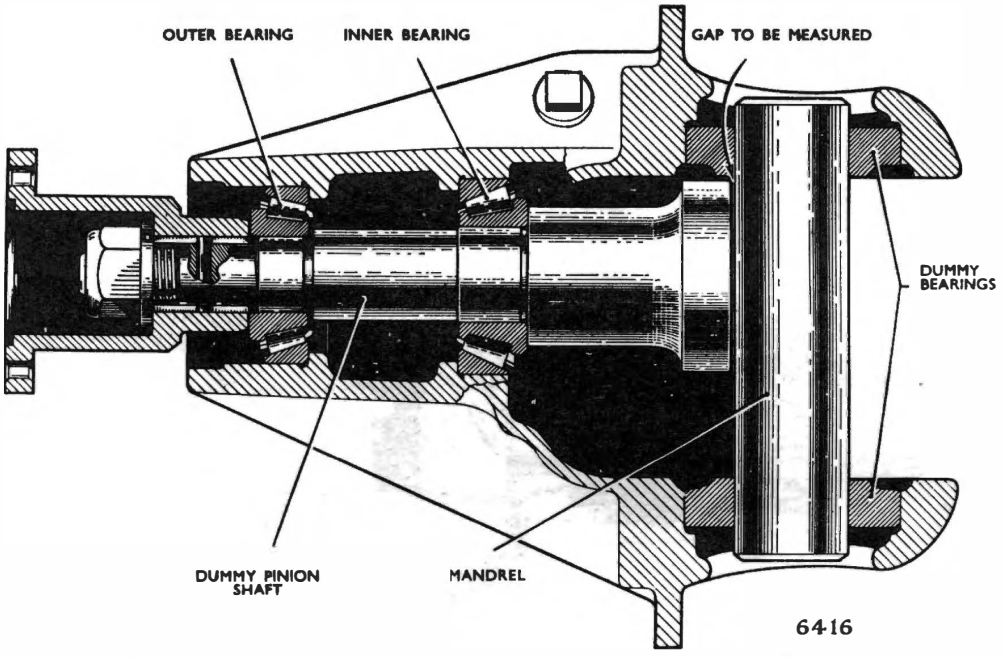

Fig. 10. *Jigs used for adjusting bevel pinion pre-load, and pinion position relative to crown wheel axis. Note also shimming positions for pinion adjustment*

DIFFERENTIAL UNIT

To adjust and refit

Having carried out the preceding operations, remove the differential box, bearings and shims as previously described.

In their place fit the dummy bearings, without any shims, their inner faces abutting the differential box.

The dummy bearings MUST be maintained in this position during subsequent operations.

Place the differential box assembly complete with dummy bearings into position in the housing. (See Fig. 12).

Replace the bearing caps and tighten the securing nuts until the dummy bearings are just gripped.

Mount a dial indicator on the differential housing, with the stylus against the heel of one of the crown wheel teeth, as nearly in line with the direction of tooth travel as possible.

Check the back-lash by moving the crown wheel but preventing the pinion from rotating, as shown in Fig. 11.

Adjust back-lash to between ·005—·009 in. (·13—·23 mm.) by tapping the appropriate dummy bearing inwards, using V.L.C. tool RG.292, and main tool 550.

Check for back-lash in at least three positions on the crown wheel.

Paint the teeth of the crown wheel with a suitable marking and rotate to obtain an impression of the pinion tooth bearing.

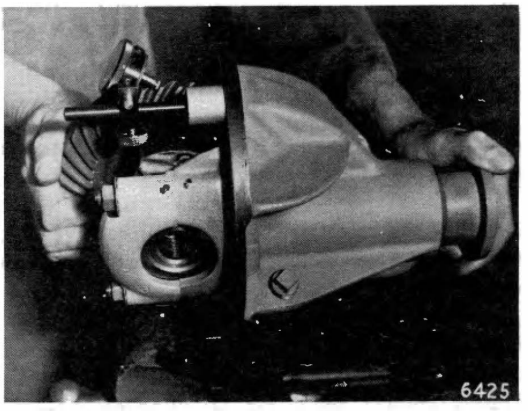

Fig. 11. *Checking backlash*

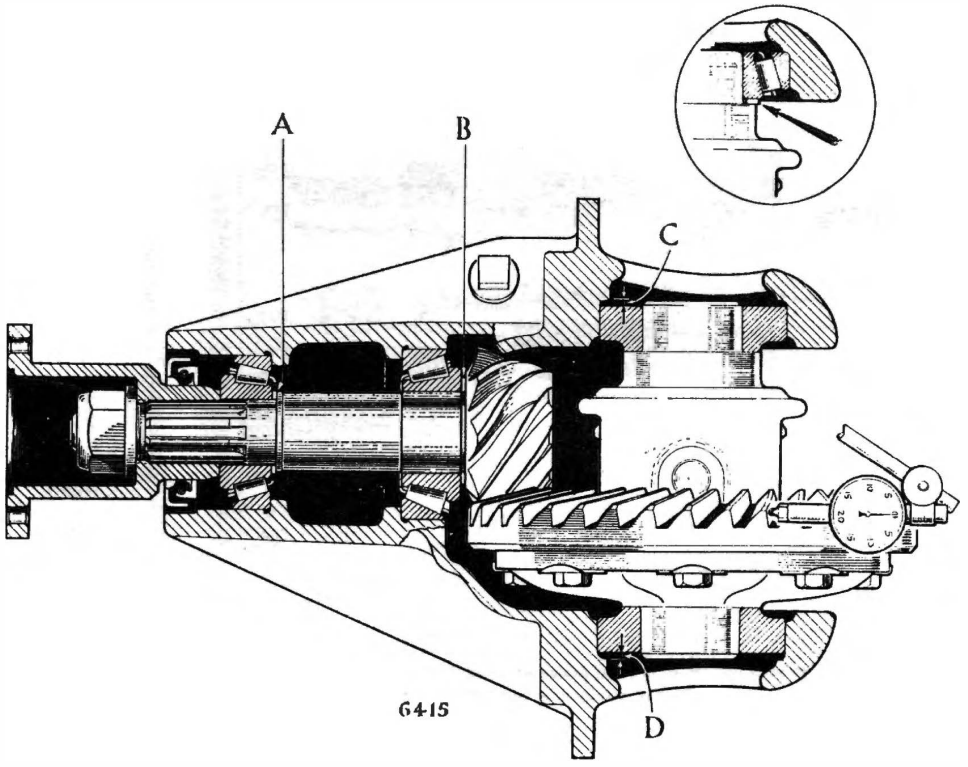

Fig. 12. *Adjustment of crown wheel bearings*

When correctly meshed, the marking so obtained should be as example A, Fig. 14, i.e. the area of contact is between the crown and base of the tooth and slightly nearer the toe (inner end) than the heel (outer end).

If necessary, adjust the crown wheel into or out of mesh, as previously described, to obtain the most favourable tooth marking, within the specified back-lash limits.

See D and E, Fig. 14.

If markings are as shown in B and C, Fig. 14, a re-adjustment of the pinion is necessary.

This entails the resetting of the pinion relative to the crown wheel, which includes the adjustment of the pre-load.

Having obtained the correct adjustment, measure the gaps between the outer faces of the dummy bearings and the casing (points C and D, Fig. 12), using feeler gauges as shown in Fig. 13.

Now measure the difference in thickness between the dummy bearing and the actual bearing for each side.

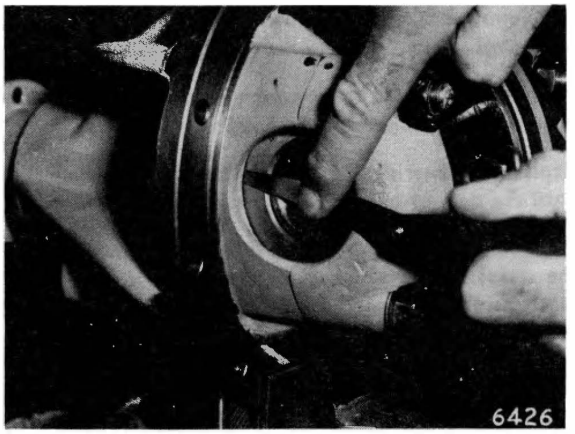

Fig. 13. *Measuring gap between dummy bearing and casing*

TOOTH CONTACT CHART

	Tooth Contact	Condition	Remedy
A	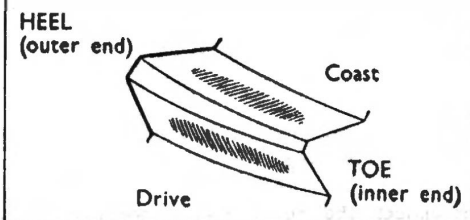	IDEAL TOOTH CONTACT evenly spread over profile, nearer toe than heel.	
B	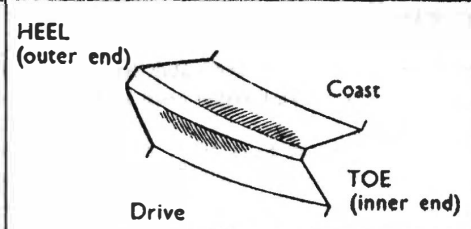	HIGH TOOTH CONTACT heavy on the top of the drive gear tooth profile.	Move the Drive PINION DEEPER into MESH, *i.e.* Reduce the pinion cone setting.
C	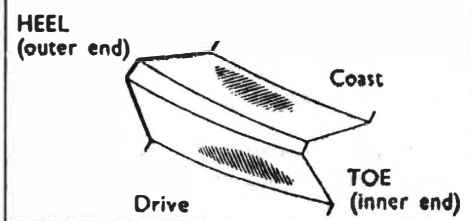	LOW TOOTH CONTACT heavy in the root of the drive gear tooth profile.	Move the Drive PINION OUT of MESH, *i.e.* Increase the pinion cone setting.
D	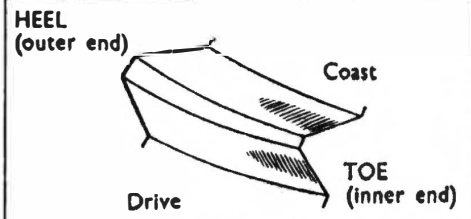	TOE CONTACT hard on the small end of the drive gear tooth.	Move the Drive GEAR OUT of MESH, *i.e.* INCREASE BACKLASH.
E	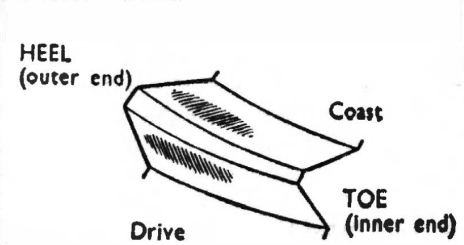	HEEL CONTACT hard on the large end of the drive gear tooth.	Move the Drive GEAR INTO MESH, *i.e.* DECREASE BACKLASH *BUT* MAINTAIN MINIMUM BACKLASH.

6102

Fig. 14. *Specimen tooth markings on crown wheel*

Measurement of bearings

This requires great accuracy and may present a little difficulty. Two methods may be used.

1. Mount a clock gauge on a surface plate and set to zero on the dummy bearing. A reading taken on the actual bearing gives the difference.

2. Alternatively, the difference may be found by the use of feeler gauges and a straight edge, if both are placed on a surface plate.

If the actual bearing is thicker than the dummy bearing, the amount must be *subtracted* from the measurement of the gap, but if the actual bearing is thinner, then the difference must be *added*.

The result gives the thickness of the shims required for each side, but ·002 in. (·050 mm.) must be added to each side to provide the necessary pre-load for the bearings.

For example, side C, Fig. 12:—

Measurement of gap C ...	+·033 in. (·84 mm.)
Actual bearing ·003 in. (·07 mm.) thicker than dummy bearing	—·003 in. (·07 mm.)
Pre-load	+·002 in. (·05 mm.)
Shims required (side C) ...	+·032 in. (·82 mm.)

Use the same method to find the shims for the other side (side D).

Remove differential box from casing and dismantle the dummy bearings.

Place the shims in position and fit the actual bearings, with the aid of tool RG.292 and main tool 550.

Replace the differential box in the housing and refit the caps.

Tighten the bearing cap nuts to the torque figure given in General Data.

REAR AXLE

To remove and refit

In the majority of cases, it will be quite unnecessary to remove the rear axle from the car, but should it become necessary to do so, the following procedure should be adopted:—

Jack up the rear of the car until the road wheels are clear of the ground and support the underframe on stands, allowing the rear axle to hang on the springs.

Remove the road wheels, disconnect the propeller shaft at the rear coupling.

Disconnect the rear shock absorbers at the lower mounting.

Disconnect the handbrake cable from the linkage and disconnect the brake flexible hose at the union coupling.

Protect the brake hose from the ingress of foreign matter, lift hose upwards and tie, to prevent loss of fluid.

Remove all spring "U" bolts and withdraw the axle from between the springs.

It may be necessary on some models to lower the end of one, or both, road springs, in order to remove the axle.

If this is necessary, support the axle on a jack and withdraw the lower rear shackle bolt from the spring hanger assembly. (Both rear shackle bolts where the hanger assembly has integral plates and pins).

Slacken the front end shackle bolt before lowering the axle and springs.

Reassembly is a reversal of the above operations.

Bleed the brakes (see Section K).

When refitting the axle to the springs, tighten the "U" bolts to the torque figure given in General Data.

If the springs are disconnected, allow the car to stand on its wheels under its own weight, before tightening the shackle bolts.

Rear axle breather

The breather is housed under a domed cap situated on top of the axle casing to the right of the differential housing. (See Fig. 1, item 2).

REAR SUSPENSION

SECTION H

CONTENTS

Page

DESCRIPTION 4

REAR SPRING

—To remove and dismantle 4

—Examination 4

—To rebuild and refit 5

—To check spring camber 5

SHOCK ABSORBER

—Description and servicing 6

—Testing by hand ... ... See Section F

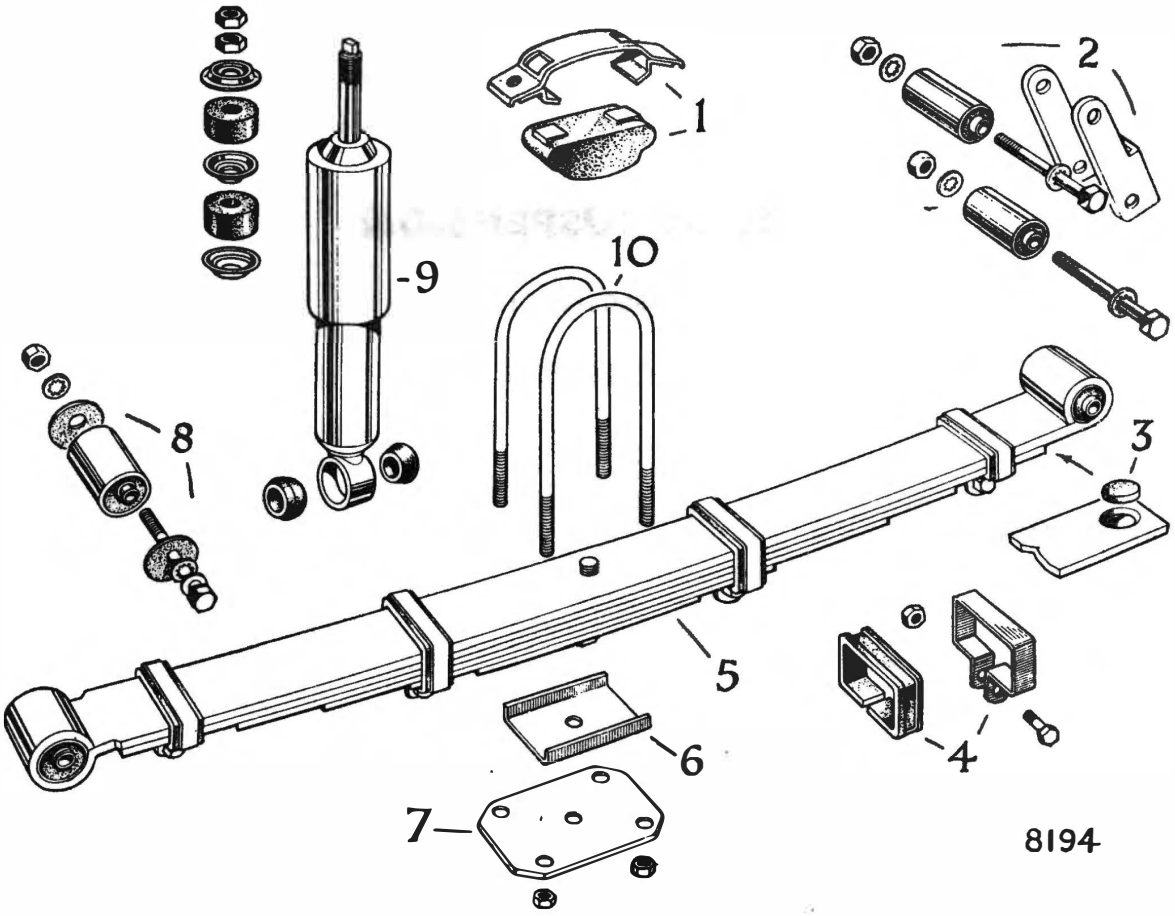

Fig. 1. *Components of rear suspension*

Alpine

1. BUFFER TO FRAME
2. REAR SHACKLE ASSEMBLY
3. SPRING LEAF THRUST BUTTON
4. LEAF CLIP AND RUBBER LINER
5. REAR SPRING
6. LOCATION PLATE
7. CLAMP PLATE
8. FRONT EYE BUSH ASSEMBLY
9. SHOCK ABSORBER
10. SPRING "U" BOLTS

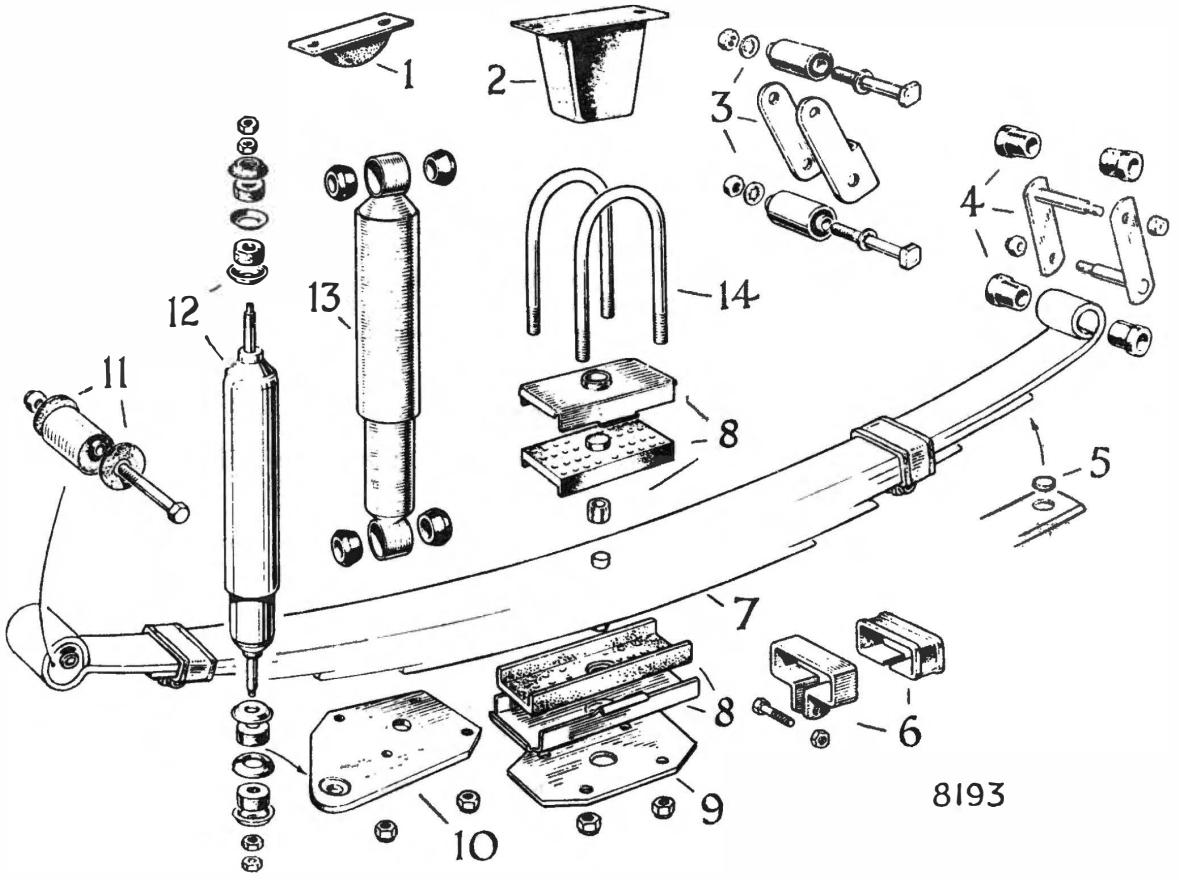

Fig. 2. *Components of rear suspension*

All models excluding Alpine

Where there is a variation, the models to which it is applicable are noted in brackets

1. BUFFER TO FRAME (MINX, GAZELLE, RAPIER)
2. BUFFER TO FRAME (SUPER MINX, VOGUE, SCEPTRE)
3. REAR SHACKLE ASSEMBLY (MINX, GAZELLE, RAPIER)
4. REAR SHACKLE ASSEMBLY (SUPER MINX, VOGUE, SCEPTRE)
5. SPRING LEAF THRUST BUTTON
6. LEAF CLIP AND RUBBER LINER
7. REAR SPRING
8. SPRING CLAMP RUBBERS (2), RETAINERS (2) AND SLEEVE (1)
9. SPRING CLAMP PLATE (SUPER MINX, VOGUE, SCEPTRE)
10. SPRING CLAMP PLATE (MINX, GAZELLE, RAPIER)
11. FRONT EYE BUSH ASSEMBLY
12. SHOCK ABSORBER (MINX, GAZELLE, RAPIER)
13. SHOCK ABSORBER (SUPER MINX, VOGUE, SCEPTRE)
14. SPRING "U" BOLTS

REAR SUSPENSION

DESCRIPTION

The rear suspension of all models contained in this Manual is provided by two semi-elliptic springs, acting in conjunction with telescopic shock absorbers. Steel and bonded rubber eccentric bushes are used in the front spring eyes. The rear spring shackles are of two types. Certain models have bonded steel and rubber bushes in the underframe and spring eye, with linked shackle plates located by shackle bolts, nuts and washers.

Other models have rubber bushes in the underframe and spring eye, the shackle plates have the shackle pins attached, and these are retained by nuts and washers.

REAR SPRING

To remove

Jack up the car and place stands beneath the underframe, just forward of the front eyes of the springs.

Remove the road wheel adjacent to the spring which is to be removed. Take the weight of the axle on a jack placed under the differential housing.

Disconnect the lower end of the shock absorber and detach from the axle.

Clean the projecting threads of the "U" bolts with a wire brush and paraffin or penetrating oil, and remove the nuts and washers from the "U" bolts.

Jack up the rear axle, tapping the "U" bolts as necessary until the axle is parted from the spring.

Remove the "U" bolts, clamp plate, top and bottom rubbers and retainer plates and sleeve (where fitted), or axle location plate.

If wedges are fitted, note which way they are facing before removal, in order that they may be replaced the same way round.

Disconnect the rear shackle assembly by removing the nuts and washers from the shackle pins. For the type with rubber bushes and combined shackle plates and pins, it is necessary to remove all the nuts and washers, and tap out both top and bottom pins in order to remove the spring.

For the models fitted with bonded steel and rubber bushes, it is only necessary to loosen the nut on the shackle bolt through the underframe, then remove the nut and washer and tap out the shackle pin which passes through the spring eye.

Remove the front shackle pin by removing the nut and washer and tapping out the pin.

The spring is now free to be taken away.

To dismantle

Before dismantling, mark one end of each leaf with a centre punch.

This ensures that the leaves are replaced in the position they occupied prior to dismantling.

Grip the spring in a vice, holding it firmly by the top and bottom leaves.

Remove the spring clip bolts, and slide clips to the ends of the spring.

Remove the dowel bolt nut.

Tap out the dowel bolt, release the vice and the spring will fall apart.

Remove the thrust buttons and clip rubbers (if fitted).

Examination

Clean the spring leaves with paraffin.

Check thrust buttons (if fitted) for excessive wear, and replace, if necessary, before reassembling the spring.

In the event of fracture of a spring leaf, the other leaves, particularly the ones above and below the broken leaf, should be examined for cracks and damage.

Cracks will often show up on the dry surface, by the exudation of paraffin along the line of the crack.

Any suspect leaves should be replaced.

The "setting up" of spring leaves is not recommended, and in the case of a weak spring, a new or service replacement should be fitted.

To rebuild

Before rebuilding the spring, the leaves should be thinly coated with graphite grease.

Rebuilding is a reversal of the dismantling instructions, but alignment of the leaves will be greatly facilitated if a suitable length of steel rod is inserted through the dowel bolt hole.

An attempt to insert the dowel bolt at this stage may cause damage to the threads.

With the spring correctly assembled, compress the leaves at the centre with a suitable clamp or press, remove the guide rod, insert the dowel bolt, head to the top leaf, fit the nut and tighten.

Certain models have a sleeve fitted over the head of the dowel bolt. Do not forget to replace this.

Position the clips, check the clip rubbers (if fitted), and replace if necessary.

Tighten the bolts, taking care not to distort the clips.

Check that the leaves are lying flush upon each other and the lower leaves are not protruding.

Where the bonded steel and rubber bushes are fitted to the rear shackle assembly, they should be pressed out of the spring eye and underframe for renewal purposes.

The use of a suitable withdrawal tool is recommended to remove the bush in the underframe.

If a new front eye bush is fitted, it is imperative that it is pressed in with the shackle pin hole at the top of the spring eye. (See Fig. 3).

A tolerance of $\pm\frac{1}{32}$ in. (·8 mm.) must not be exceeded. To ensure this is maintained, it is recommended that the spring is scribed in the manner illustrated at (A, Fig. 3) before fitting.

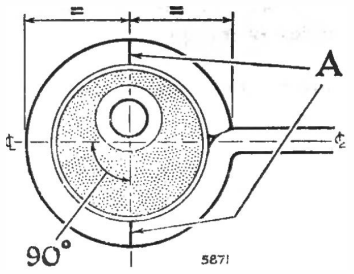

Fig. 3. *Method of marking spring eye*

To refit

Refitting is the reverse of "To remove", but the final tightening of the spring "U" bolts and shackle pins should be carried out with the car standing unladen on the road wheels. This ensures that the spring eyes and shackle bushes are not subject to excessive twist when in the bump or rebound position.

Torque the "U" bolt nuts to the figure given in General Data. Make sure that the figure used is the correct one for any given model.

To check spring camber

Spring camber is the difference in height between the top of the main leaf and a line drawn through the centres of the spring eyes.

As will be appreciated, this varies according to the weight carried in the vehicle.

In order to check the rear spring laden camber, load the vehicle with weights to the value shown in General Data under "Rear Suspension". Make sure the figure used is the correct one for any given model. Stretch a length of thread between the spring eye centres, and measure the distance between the top centre of the main spring leaf and the thread ("A", Fig. 4).

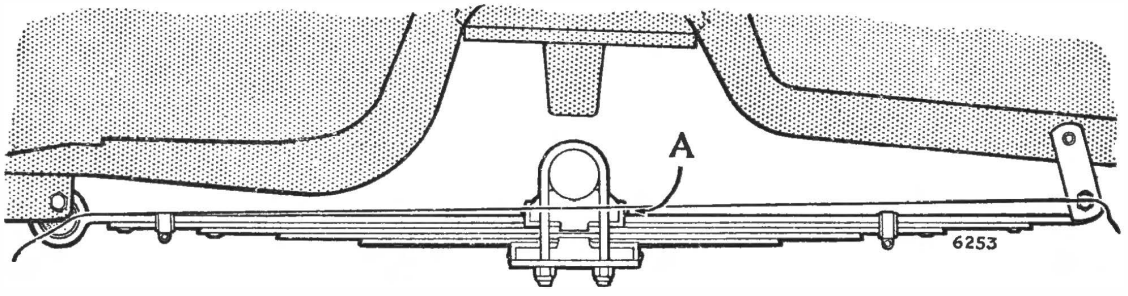

Fig. 4. *Checking spring camber*

Positive camber means that the line of the thread will be above the main leaf of the spring.

Negative or reverse camber means the line of the thread will be below the main leaf.

The spring camber figures are given in General Data. Make sure that the figure used is correct for a given model.

SHOCK ABSORBER

DESCRIPTION

The body of the shock absorber is mounted almost vertically from the rear axle to the underframe. It is direct acting, no links or levers being required.

Servicing

These units are completely sealed, no topping up, no adjustment or other servicing is required, except for periodical checking of mountings and rubber bushes, which can be carried out without the aid of special tools. In the event of any shock absorber requiring attention, remove the faulty unit and fit a replacement shock absorber.

Testing by hand

See Section F, "Shock absorber, testing by hand".

GIRLING MONITUBE DAMPER

Certain models are fitted with the Girling Monitube damper, which is much more slender in design than the conventional type of damper. Both types perform the same function, but are not interchangeable, except in pairs.

When replacing one, always obtain a replacement of the same type.

The Girling Monitube damper differs from the conventional unit in two respects—firstly, as its name implies, in being of single tube construction, and secondly, by being pressurised.

In this type of construction, the gas reservoir is situated at one end of the working cylinder, instead of in the annular space surrounding the cylinder.

Pressurisation dispenses with the low pressure valves required in conventional dampers, and reduces the complexity, valve inertia and noise.

Since the working fluid is always under pressure, cavitation is eliminated, which also reduces noise.

Pressurisation also results in a self-extending action being imparted to the dampers, which consequently act as low-rate springs.

The effect of this on vehicle suspension is negligible, and can be ignored. It does, however, affect the normal hand testing procedure as given for conventional dampers; therefore this form of testing cannot be applied to Girling Monitube dampers.

STEERING GEAR

SECTION J

CONTENTS

	Page
ADJUSTABLE STEERING UNIT	18
—To remove and refit	18
—To dismantle and reassemble	18
—Filling up or topping up	11
BALL JOINTS	22
—To remove and refit	22
—To check wear	23
BALL JOINT COVER	22
—To renew	22
CENTRE CROSS TUBE	21
—To remove and refit	21
DIAGNOSIS OF FAULTS	23
DIRECTION INDICATOR SWITCH	5
—To remove and refit (Rigid steering units)	6
—To remove and refit (Adjustable steering units)	6
GENERAL DESCRIPTION	3
HORN RING ASSEMBLY	7
—To remove and refit (Rigid steering units)	7
—To remove and refit (Adjustable steering units)	9
INNER COLUMN BEARINGS	16
—To preload	16
MAINTENANCE	3
OVERDRIVE SWITCH	7
—To remove and refit (Rigid steering unit)	7
—To remove and refit (Adjustable steering unit)	7

RELAY LEVER ASSEMBLY ... 20
—To remove and refit ... 20
—To dismantle and reassemble ... 20
—Bushes—To renew 21

ROCKER SHAFT ... 16
—Endfloat—To check and adjust ... 16
—Bush—To renew ... 16

STEERING ARM ... 23
—To remove and refit ... 23

STEERING COLUMN COWLING ... 3
—To remove and refit (Minx and Gazelle) ... 3
—To remove and refit (Super Minx and Vogue) ... 5
—To remove and refit (Alpine, Rapier, Sceptre) ... 5

STEERING LINKAGE ... 21
—Centre cross tube—To remove and refit ... 21
—Track rods—To remove and refit ... 22

STEERING UNIT ... 11
—To remove and refit ... 11
—To dismantle and reassemble ... 15
—Felt bush—To renew ... 17
—Filling up or topping up ... 11
—Ratio—To check ... 17

STEERING WHEEL (ADJUSTABLE STEERING UNIT) ... 10
—Adjusting the height ... 10
—To remove and refit ... 10

STEERING WHEEL (RIGID STEERING UNIT) ... 10
—To remove and refit ... 10

TRACK RODS ... 22
—To remove and refit ... 22

WORM CAM HELIX ... 17
—Ratio—To check ... 17

STEERING GEAR

GENERAL DESCRIPTION

Steering is effected by a symmetrical linkage consisting of two swing levers, a centre cross tube and two track rods.

The two swing levers are included in the steering unit and relay lever assembly and are connected together at their rear ends by the centre cross tube. The two track rods are fitted between the forward ends of the swing levers and the steering arms mounted on the stub axle carriers.

The rearward length of both swing levers is such that the centre cross tube will pass behind the cylinder block and above the clutch bell housing while the forward pointing length is designed so the steering will not be effected by the rise and fall of the independent front suspension units due to irregular road surfaces.

Movement of the steering wheel is transferred to the front wheel, nearest the steering unit, by the swing lever attached to the steering unit and one track rod. Then, to the opposite front wheel by the centre cross tube, the swing lever of the relay lever assembly, and the second track rod.

MAINTENANCE

Maintenance checks will be required at regular intervals as given in the "Owner's Service Book" and "Owner's Handbook" which will include the following:—

(i) Checking the security of the steering unit, relay lever assembly, the steering unit swing lever, centre cross tube, track rod ball joints and steering arms.

(ii) Checking the oil level in the steering unit.

(iii) Checking the alignment of the track rod ball joint sockets on the tapered pins.

(iv) Checking the condition of the dust covers on the track rod ball joints.

STEERING COLUMN COWLING, SWITCHES, HORN RING AND STEERING WHEEL

STEERING COLUMN COWLING

(Rigid steering units)

Minx and Gazelle (Fig. 1)

The steering column cowling is fabricated in two halves, the upper cowling being attached to the steering column and the lower cowling "snapped" onto the upper cowling. The mating edges are cut away to accommodate the protruding lever of the direction indicator switch and in the instance of the Gazelle only, when fitted, the protruding lever of the overdrive switch.

To remove and refit

1. Spring the lower cowling from the upper cowling.
2. Remove the upper cowling from the steering column by withdrawing four screwed ball pins and two "U" brackets.
3. Refitting is the reverse of the removal sequence but particular attention must be given to the following:—
   (i) The upper cowling is located on the steering column by a raised key and must be central over any protruding lever(s) when they are in the off position.
   (ii) The four spire clips are fitted to the lower cowling with two screws each and the shape of the spire clip follows the shape of the cowling.

Super Minx and Vogue (Fig. 1)

The steering column cowling is fabricated in two halves, the lower cowling being attached to the steering column and the upper cowling is secured to the lower cowling by screws passing through the latter. The mating edges are cut away to accommodate the protruding lever of the direction indicator switch. A small trim clip is fitted between the upper cowling and the instrument panel.

In the instance of the Vogue only, when fitted, the overdrive switch is mounted in the lower cowling.

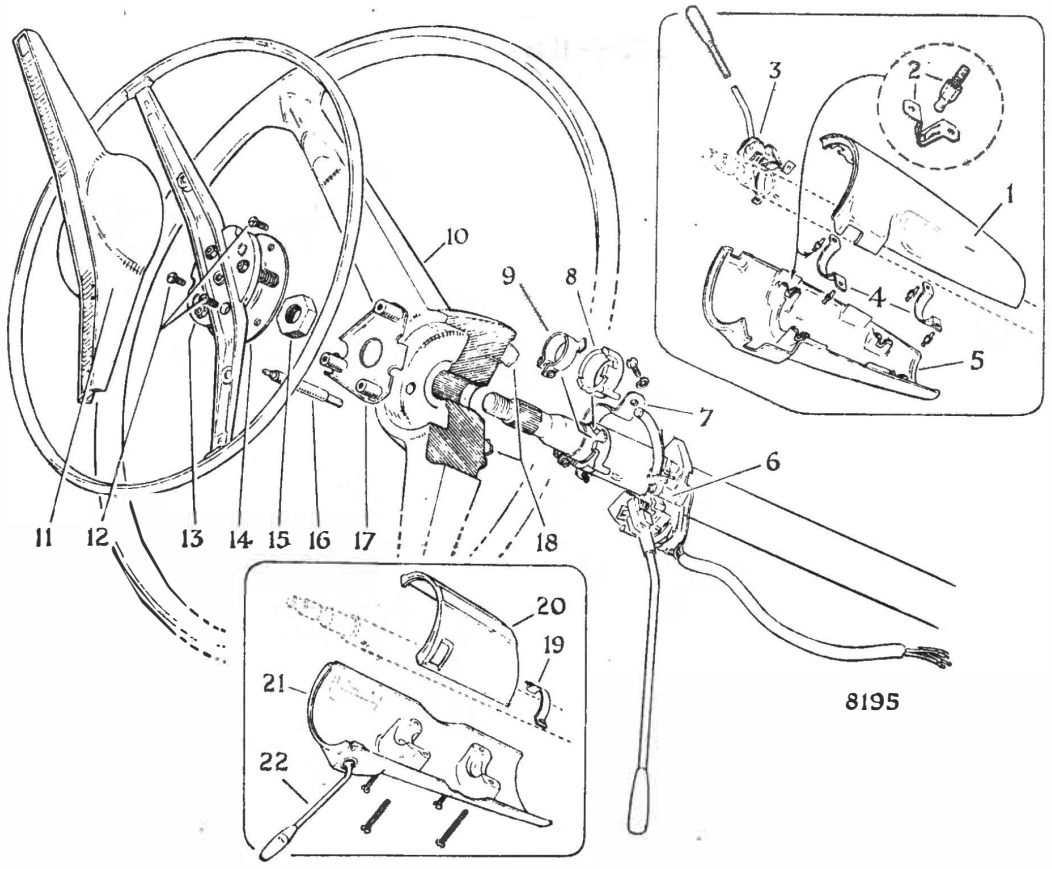

Fig. 1 *Exploded view of steering column cowling, switches, horn ring and steering wheel of the rigid steering unit. The top insert shows the Minx and Gazelle cowling with the Gazelle overdrive switch while the bottom insert shows the Super Minx and Vogue cowling with the Vogue overdrive switch.*

1. UPPER COWLING
2. BALL PIN AND SPIRE CLIP
3. OVERDRIVE SWITCH
4. CLIPS
5. LOWER COWLING
6. DIRECTION INDICATOR SWITCH
7. CLIP
8. STRIKER BUSH
9. DRIVER
10. STEERING WHEEL
11. MOTIF
12. HORN RING SCREWS
13. HORN RING
14. LOWER CONTACT PLATE
15. STEERING WHEEL NUT
16. PLUNGER
17. ANCHOR PLATE
18. SLIP RING
19. CLIP
20. UPPER COWLING
21. LOWER COWLING
22. OVERDRIVE SWITCH

To remove and refit

1. Remove the trim clip from between the upper cowling and the instrument panel by spreading its top end and lifting it upward to withdraw the "legs" from beneath the instrument panel.

2. Remove the upper cowling from the lower cowling by withdrawing the two screws nearer the steering wheel through the lower cowling.

3. Remove the lower cowling from the steering column by withdrawing two screws, furthest from the steerng wheel and collecting a clip from above. When an overdrive switch is fitted, disconnect the electrical harness from the switch terminals.

4. Refitting is the reverse of the removal sequence.

STEERING COLUMN COWLING

(Adjustable steering units)

Alpine (Fig. 2)

The steering column cowling is fabricated in two halves, the upper cowling being attached to the steering column and the lower cowling attached to the upper. The mating edges are cut away to accommodate the protruding lever of the direction indicator switch and, when fitted, the body of the overdrive switch.

Rapier and Sceptre (Fig. 2)

The steering column cowling is identical to that described in the previous paragraph but two additional cowling extensions are fitted between the aforementioned cowlings and the instrument panel.

To remove and refit

1. Remove the upper and lower cowling extensions, when fitted, from the steering column just above the instrument panel by withdrawing two screws.

2. Remove the lower cowling from the upper by withdrawing three screws.

3. Detach the overdrive switch, when fitted, from beneath the upper cowling and lay to one side.

4. Remove the upper cowling from the steering column by withdrawing four screws and a clip.

5. Refitting is the reverse of the removal sequence but particular attention must be given to the following points:—

   (i) Set the steering wheel in its lowest position, and refit the upper cowling centrally over the direction indicator switch and so there is ·050 in. (1 mm.) clearance between the top edge of the upper cowling and the steering wheel hub; the spire nut on the upper cowling clip is positioned towards the steering wheel.

   (ii) The overdrive switch, when fitted, is positioned between the edges of the upper and lower cowlings as the lower cowling is being offered up.

DIRECTION INDICATOR SWITCH

The direction indicator switch, which incorporates a headlamp flasher, is located on the top end of the outer column by a raised key with a striker mounted on the inner column.

On completion of a turn, as the steering wheel returns to the straight ahead position, the striker rotating with the inner column actuates the cancelling mechanism in the switch and returns it to the "off" position. The self-cancelling operation is only operative when the steering wheel has been turned, in the first instance, more than 60° in either direction.

There are two types of strikers and these are fitted according to the type of steering unit.

(i) Rigid steering units

A non-metallic bush, fitted into the top end of the outer column and rotated by a metal driver mounted on the inner column. The bush has a "pip" formed on its outer edge to actuate the cancelling mechanism in the direction indicator switch.

(ii) **Adjustable steering units**

A metal band, mounted on the swaged section of the inner column, having a downward pointing finger to actuate the cancelling mechanism in the direction indicator switch.

To remove and refit (Rigid steering units)

1. Disconnect the battery.

2. Remove the steering column cowling from the steering column, see under "Steering column cowling —To remove and refit".

3. Remove the direction indicator switch from the top of the outer column by withdrawing two screws, washers and a clip, in some instances the clip may be replaced by an overdrive switch which must be laid to one side.

4. When it is necessary to remove the striker bush, first remove the steering wheel, see under "Steering wheel—To remove and refit", then remove the driver and striker bush from the inner and outer columns respectively by releasing the pinch bolt of the driver.

5. Refitting is the reverse of the removal sequence but particular attention must be given to the following:—

   (i) Set the front wheels in the straight ahead attitude by positioning them parallel to the rear wheels.

   (ii) Rock the top end of the inner column within the outer, when excessive clearance is evident a new felt bush must be fitted, see under "Felt bush— To renew".

   (iii) Refit the striker bush and driver so the "pip" on the striker bush aligns with the switch locating key on the outer column, permit a small working clearance between the striker bush and driver before tightening the pinch bolt.

   (iv) Refit the direction indicator switch by locating the key on the outer column with the overdrive switch on the opposite side as necessary, set the height of the direction indicator switch so its springs make full contact with the "pip" of the striker bush.

   (v) Ensure that the spring blade on the top face of the direction indicator switch contacts the slip ring in the underside of the steering wheel hub otherwise horn failure may result.

To remove and refit (Adjustable steering units)

1. Disconnect the battery.

2. Remove the steering column cowling from the steering column, see under "Steering column cowling—To remove and refit".

3. Remove the direction indicator switch from the top of the outer column by withdrawing two screws, washers and a clip.

4. When it is necessary to remove the striker, first remove the steering wheel, see under "Steering wheel—To remove and refit", remove the slip ring from the inner column by slackening off the striker pinch bolt and withdraw the striker from the underside of the slip ring.

5. Refitting is the reverse of the removal sequence but particular attention must be given to the following:—

   (i) Set the front wheels in the straight ahead attitude by positioning them parallel to the rear wheels.

   (ii) Refit the direction indicator switch by locating the raised key and flush with the top end of the outer column.

   (iii) Refit the striker and slip ring so the latter abuts to the circlip of the ball bearing assembly and the finger of the striker is between the two springs of the direction indicator switch.

   (iv) Ensure that the spring blade on the top face of the direction indicator switch contacts the underside of the slip ring in the underside of the steering wheel hub otherwise horn failure may result.

OVERDRIVE SWITCH

Three types of overdrive switches are fitted, two for the rigid steering units and a third for the adjustable steering unit.

(i) **Rigid steering units**

Fitted on the opposite side to the direction indicator switch by replacing the original clip on Gazelle cars.

(ii) Fitted into the lower cowling of the steering column cowling on Vogue cars.

(iii) **Adjustable steering units**

Gripped between the upper and lower steering column cowlings on the opposite side to the direction indicator switch on Alpine, Rapier and Sceptre cars.

To remove and refit (Rigid steering units)

1. Follow the procedure given under "Direction indicator, rigid steering units—To remove and refit" for Gazelle cars.
2. Remove the steering column cowling, see under "Steering column cowling, Super Minx and Vogue cars—To remove and refit".
3. Disconnect the electrical harness from the overdrive switch.
4. Remove the overdrive switch from the lower cowling by releasing the bezel nut, for Vogue cars.
5. Refitting is the reverse of the removal sequence.

To remove and refit (Adjustable steering units)

1. Remove the lower steering column cowling from the upper by withdrawing three screws and withdraw the overdrive switch between the cowlings.
2. Disconnect the electrical harness from the overdrive switch.
3. Remove the overdrive switch from the clamp plate by releasing the bezel nut.
4. Refitting is the reverse of the removal sequence.

HORN RING ASSEMBLY (Rigid steering units)

(Fig. 1.)

The horn ring assembly consists of a two spoked ring, the centre of which incorporates the upper contact plate, mounted on a lower contact plate by three studs, springs, insulating bushes and nuts; thus the two contact plates are insulated from one another. The horn ring assembly is mounted in the steering wheel hub by the lower contact plate to the carrier plate fitted beneath the steering wheel nut. A cover and motif assembly is a press fit on the two horn ring spokes which align with those of the steering wheel.

A live cable from the horn(s) is connected by a spring blade on top of the headlamp flasher/direction indicator switch to a slip ring moulded into the steering wheel hub. A spring-loaded plunger connects this slip ring to the upper contact plate of the horn ring by passing through clearance holes in the carrier and lower contact plates; the two latter items are connected to earth by the steering unit inner column.

Pressure applied to the horn ring, "tilts" the upper contact plate onto the lower and completes the circuit from the horns. The three springs, between the two contact plates returns the horn ring to the "off" position when the pressure is released.

To remove and refit (Rigid steering units)

1. Disconnect the battery.
2. Prise the cover and motif assembly from the spokes of the horn ring.
3. Remove the horn ring assembly and spring plunger from the steering wheel hub by withdrawing three screws and washers from the lower contact plate.
4. When necessary, remove the carrier plate from the steering wheel hub by removing the steering wheel nut.
5. Refitting is the reverse of the removal sequence but particular attention must be given to the following:—

   (i) Locate the tongue on the underside of the carrier plate in the groove moulded in the steering wheel hub.

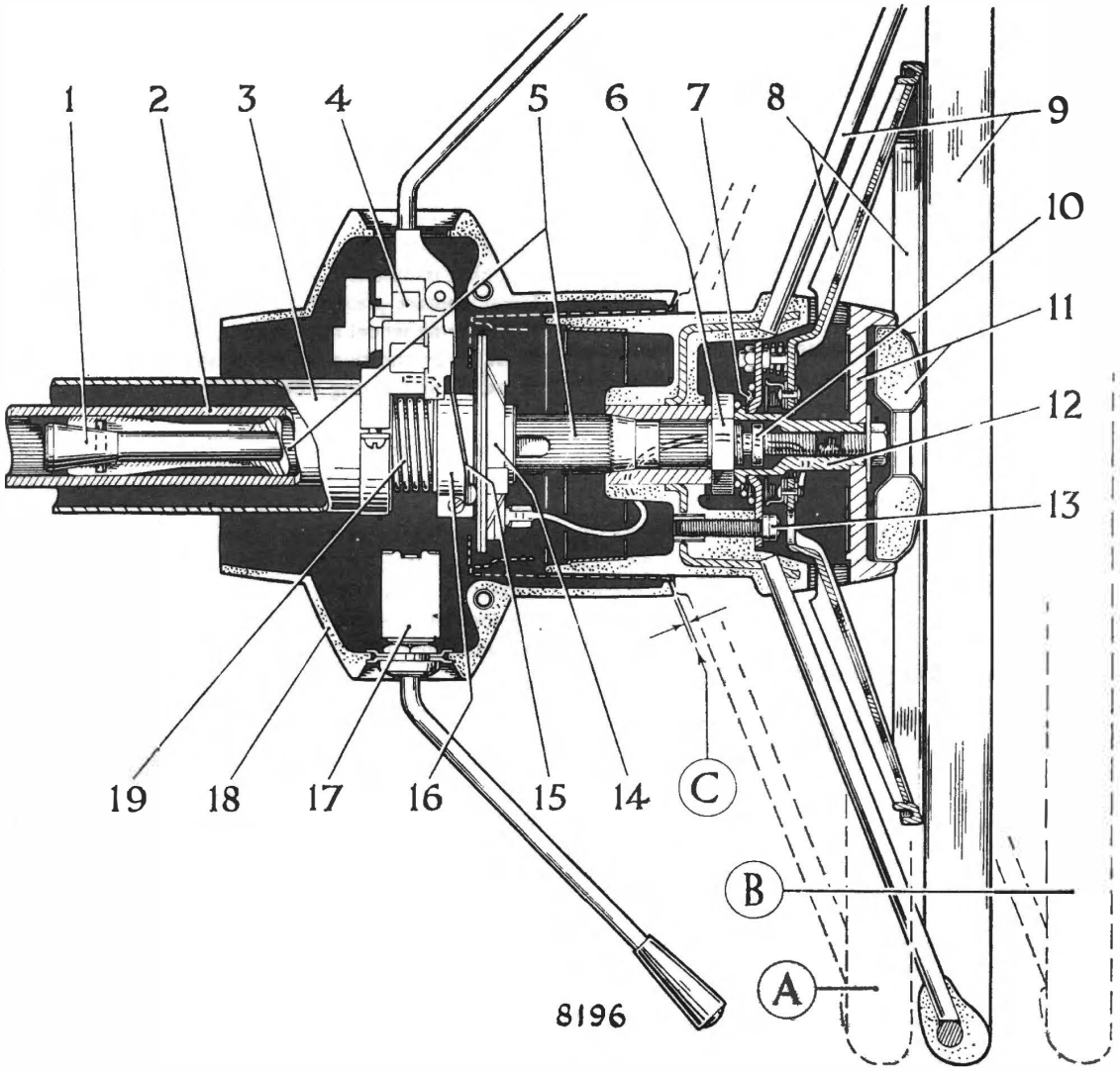

Fig. 2 *Cross section and cut away view of steering column cowling, switches, horn ring and steering wheel of the adjustable steering column.*

1. EXPANDER BOLT
2. INNER COLUMN
3. OUTER COLUMN
4. DIRECTION INDICATOR SWITCH
5. SPLINED EXTENSION PIECE
6. STEERING WHEEL NUT
7. EARTHING SPRING
8. HORN RING
9. STEERING WHEEL
10. NYLON CIRCLIP
11. ADJUSTING NUT AND MOTIF
12. EXPANDER BOLT EXTENSION
13. HORN RING SCREW
14. SLIP RING
15. SPRING BLADE
16. STRIKER
17. OVERDRIVE SWITCH
18. COWLING
19. BEARING SPRING

A. LOWEST POSITION OF STEERING WHEEL

B. HIGHEST POSITION OF STEERING WHEEL

C. ·050 in. (1 mm.) CLEARANCE

(ii) The spring plunger is fitted hexagon end downwards and its top end must locate the hole in the upper contact plate.

(iii) The amount of "tilt" required to sound the horns can be decreased or increased by tightening or slackening the three nuts on the top face of the upper contact plate but it is essential that the two contact faces are kept parallel.

HORN RING ASSEMBLY (Fig. 2)

(Adjustable steering unit)

The horn ring assembly consists of a two spoked ring, the centre of which incorporates the upper contact plate, mounted on a lower contact plate by three studs, springs, insulated bushes and nuts; thus the two contact plates are insulated from one another. The horn ring assembly is mounted directly onto the steering wheel hub by the lower contact plate. A motif assembly is incorporated in the steering wheel adjusting nut.

A live cable from the horns is connected by a spring blade on top of the headlamp flasher/direction indicator switch to a slip ring mounted on, but insulated from, the steering unit inner column.

A cable fitted to the "Lucar" connector on the top of the slip ring, passes through a hole in the steering wheel hub and a cut-out in the lower contact plate to the upper contact plate. The length of the cable is such that it allows for the adjustable height of the steering wheel. The lower contact plate is earthed by a spring between itself and the steering wheel nut.

Pressure applied to the horn ring "tilts" the upper contact plate onto the lower and completes the circuit from the horns. The three springs, between the two contact plates return the horn ring to the "off" position when the pressure is released.

To remove and refit (Adjustable steering units)

1. Disconnect the battery.

2. Lock the steering wheel in its highest position.

3. Remove the lower cowling of the steering column cowling by withdrawing three screws.

4. Disconnect the cable from the "Lucar" connector on the top face of the slip ring.

5. Prise the motif from the steering wheel adjusting nut.

6. Remove the steering wheel adjusting nut from the top of the expander bolt extension by withdrawing a bolt and washer.

7. Remove the horn ring assembly from the steering wheel hub by withdrawing three screws and washers, easing the cable through the steering wheel hub; the conical-shaped earthing spring will normally remain under the expander bolt extension.

   When it is necessary to remove the slip ring, remove the steering wheel, see under "Steering wheel, adjustable steering units—To remove and refit" and slacken off the pinch bolt of the direction indicator striker beneath the slip ring.

8. Refitting is the reverse of the removal sequence but particular attention must be given to the following:—

   (i) When refitting the slip ring, abut its underside edge to the circlip of the ball bearing assembly and ensure that the slip ring surface contacts the spring blade of the headlamp flasher/direction indicator switch; set the front wheels in the straight ahead attitude by positioning them parallel to the rear wheels, set the finger of the striker mid-way between the springs of the direction indicator switch and tighten the pinch bolt.

   (ii) The amount of "tilt" required to sound the horns can be decreased or increased by tightening or slackening the three nuts on the underside of the lower contact plate but it is essential that the two contact faces are kept parallel.

   (iii) The small end of the conical-shaped earthing spring is positioned beneath the expander bolt extension.

   (iv) Pass the "Lucar" end of the cable through the hole in the steering wheel hub and ensure that the cable passes through the cut-out in the lower contact plate, draw its excess length towards the slip ring.

STEERING WHEEL (Rigid steering units) (Fig. 1)

The two-spoke steering wheel is mounted on the inner column of the steering unit by a taper, parallel splines and a nut.

To remove and refit (Rigid steering units)

1. Remove the horn ring assembly from the steering wheel, see under "Horn ring, rigid steering unit—To remove and refit".

2. Identify the position of the steering wheel to the inner column, remove the steering wheel and carrier plate from the inner column by detaching the nut.

3. Refitting is the reverse of the removal sequence but particular attention must be given to the following:—

   (i) Set the front wheels in a straight ahead attitude by positioning them parallel to the rear wheels and refit the steering wheel with the two spokes in a horizontal position, or to counteract any severe road camber, one spline removed in an anti-clockwise direction for right-hand drive cars or one spline removed in a clockwise direction for left-hand drive cars.

   (ii) Locate the tongue on the underside of the carrier in the groove moulded in the steering wheel hub.

STEERING WHEEL (Adjustable steering unit)

(Fig. 2)

The steering wheel of the telescopic steering unit is mounted on a splined extension piece by a taper, parallel splines and a nut. The splined extension piece slides in the inner column and provides the height adjustment.

As the steering wheel adjusting nut is slackened off the expander bolt extension on which it is mounted, rides up the expander bolt until its flanged end contacts the lower contact plate of the horn ring assembly.

Reactionary movement causes the expander bolt to move downwards and release its grip on the splined extension piece, permitting the latter freedom of movement within the inner column. As the steering wheel is mounted on the splined extension piece, it can be raised or lowered as required.

When the steering wheel adjusting nut is tightened, the tapered end of the expander bolt expands the splined extension piece within the inner column; thus the steering wheel can be locked at that height.

Adjusting the height

1. Release the steering wheel by slackening off the steering wheel adjusting nut in the centre of the steering wheel until it "clicks".

2. Move the steering wheel up or down to the desired height.

3. Lock the steering wheel in position by rotating the adjusting nut clockwise.

To remove and refit (Adjustable steering unit)

1. Remove the horn ring assembly from the steering wheel, see under "Horn ring assembly, telescopic steering units—To remove and refit".

2. Lower the steering wheel, this will prevent the expander bolt dropping down into the inner column, by slackening off the expander and giving it a small tap with a mallet to release the lock.

3. Remove the conical-shaped earthing spring from the steering wheel hub by removing the expander bolt extension; ensure that the nylon circlip is below the thread on the expander bolt.

4. Identify the position of the steering wheel on the splined extension and remove by detaching the nut.

5. Refitting is the reverse of the removal sequence but particular attention must be given to the following:—

   (i) Set the front wheels in the straight ahead attitude by positioning them parallel to the rear wheels and offer up the steering wheel with the oblong-shaped hole in the hub in approximately the six-o'clock position and with the two spokes in the horizontal position; or, to counteract any severe road camber, one spline removed in an anti-clockwise direction for right-hand drive cars or one spline removed in a clockwise direction for left-hand drive cars.

(ii) The conical-shaped earthing spring is fitted small end downwards before the expander bolt extension is fitted.

RIGID STEERING UNIT

Figs. 3 and 4

The rigid steering unit can be of Burman or Cam Gear manufacture but both are of the worm cam and nut type with steel balls forming the connection between worm cam and nut, these steel balls recirculate through a transfer tube attached to the bottom of the nut. The steering unit has a solid inner column with an integral worm cam for the nut, an outer column and steering box to house the inner column/worm cam, nut and rocker shaft.

The top end of the inner column is supported in the outer column by an impregnated felt bush and has a taper and parallel splines for the attachment of the steering wheel. The worm cam and nut at the bottom of the inner column is supported in the steering box by two rows of steel balls, one each side of the worm cam. The nut is prevented from rotating with the worm cam by a guide roller mounted on an extension of the nut and running in a channel formed in the underside of the steering box top cover.

The axis of the rocker shaft, in the steering box, is at right-angles to that of the inner column and a forked lever on the inner end of the rocker shaft connects with the extension formed on the nut. The outer end of the rocker shaft is splined for the attachment of the swing lever.

Rotary movement of the worm cam is converted into linear movement of the nut by the recirculating steel balls and the linear movement of the nut is imparted to the rocker shaft, through the engagement of its forked lever with the extension on the nut and therefore becomes rotary; thus movement of the steering wheel becomes steering action at the swing lever.

A damper button and two coil springs are positioned between the top of the rocker shaft and the spring cap bolted to the upper face of the steering box top cover and the two springs absorb road shocks transmitted through the steering linkage.

A rubber plug is fitted in the top cover to facilitate filling and topping up the steering unit with lubricant.

There are two types of steering boxes and outer columns:—

(i) Steering box only, when its lower end is closed by a welch washer and the outer column is separate. The inner column bearings are pre-loaded by the disposition of shims between the flanged end of the outer column and the upper end of the steering box.

(ii) Steering box with an integral outer column, in this instance the inner column bearings are pre-loaded by the same method but the shims are between the lower end of the steering box and an end cover at the opposite end to the outer column.

Filling and topping-up steering unit

Fill or top-up the steering unit with the recommended lubricant, see under "Steering unit—Recommended lubricants, Section P", by cleaning and removing the plug in the top cover of the steering unit, filling the steering box to overflowing and refitting the plug on completion.

When repeated topping-up is necessary, examine the steering unit for oil leaks, particularly around the rocker shaft as it protrudes through the steering box, when leaking is detected at this point a new rocker shaft oil seal must be fitted.

To remove and refit (Rigid and adjustable steering units)

The removal and refitting sequences are similar for both types of steering units and the various cars. When differences do exist they are described under specific headings.

1. Disconnect the battery.

2. Remove the steering column cowling, direction indicator and overdrive switches, horn ring and steering wheel from the steering column, see under those respective headings for that type of steering unit and car.

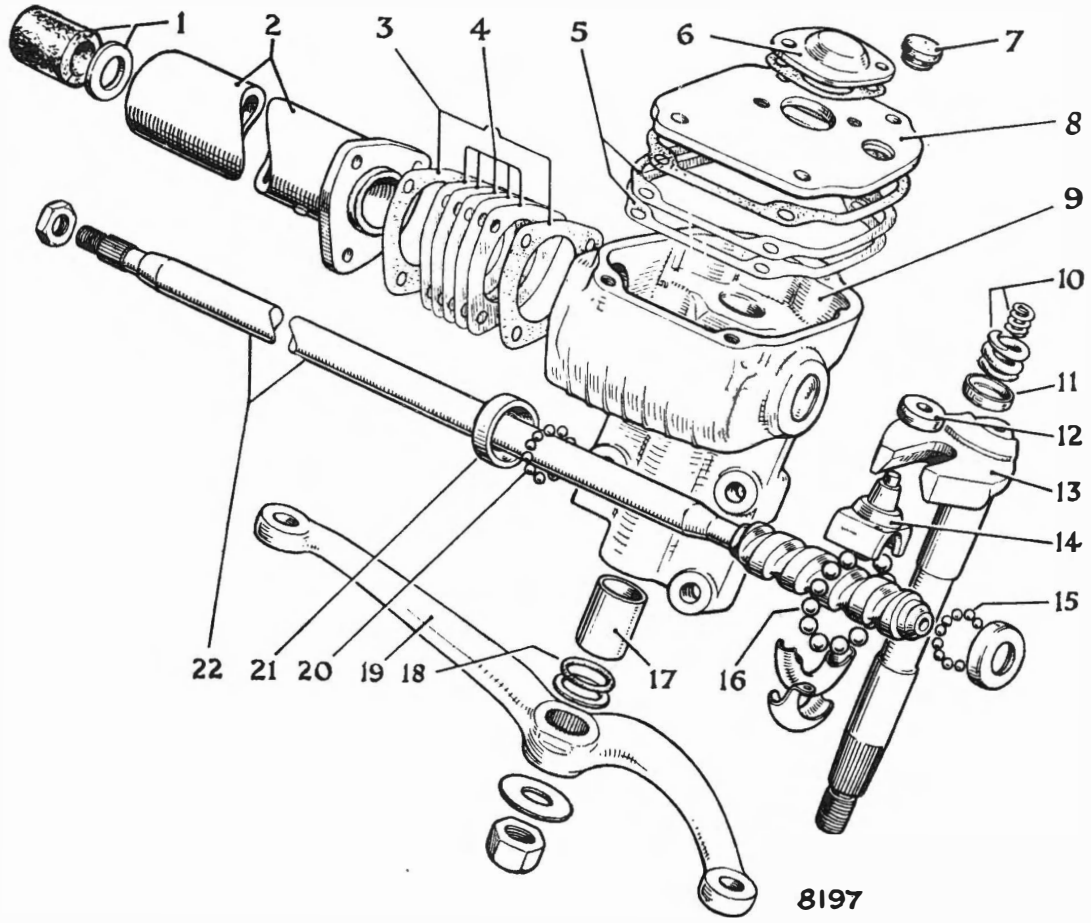

Fig. 3 *Exploded view of rigid type steering unit having the outer column method of adjusting inner column bearings.*

1. FELT BUSH AND WASHER
2. OUTER COLUMN
3. PAPER JOINTS
4. PRELOAD SHIMS
5. ROCKER SHAFT SHIMS
6. SPRING CAP
7. FILLER PLUG
8. TOP COVER
9. STEERING BOX
10. DAMPER SPRINGS
11. DAMPER BUTTON
12. GUIDE ROLLER
13. ROCKER SHAFT
14. NUT ASSEMBLY
15. SMALL STEEL BALLS
16. LARGE STEEL BALLS
17. ROCKER SHAFT BUSH
18. RING SEAL
19. SWING LEVER
20. SMALL STEEL BALLS
21. TOP BALL RACE
22. INNER COLUMN

3. When the car is equipped with a steering column gear change, disconnect and remove the linkage from the steering unit, see under "Steering column gear change—Gearbox, Section E".

4. Remove the parcel tray from beneath the instrument panel on the steering unit side.

5. Move the driver's seat forward to the full extent of its travel.

6. ***Minx, Gazelle, Rapier and Sceptre cars:*** Detach the steering column clip from the instrument panel bracket by removing a nut, washer, distance piece and pinch bolt.

   Super Minx and Vogue cars: Detach the steering column clip from the instrument panel bracket by withdrawing two bolts, washers and identifying the bolt securing the resetting cable of the trip odometer.

   Alpine cars: Withdraw the finisher from the instrument panel by removing two nuts and washers, detach the steering column from the instrument panel bracket by withdrawing two bolts and washers and an "X" shaped bracket.

7. Detach the swing lever from the steering unit rocker shaft by releasing the tabwasher, removing the nut and using a suitable extractor, RG.198D; to apply the extractor, slacken off the three steering unit attachment bolts, under the front wheel arch, and ease the steering unit away from the under-frame sidemember.

8. ***Alpine cars:*** Remove the bonnet, after marking the position of the hinges, by withdrawing eight bolts and washers, remove the bulkhead to wheel arch strut on the same side as the steering unit by withdrawing four bolts, washers and identifying any shims at the bulkhead end.

   Alpine right-hand drive cars: Remove the engine dipstick, distributor, tachometer drive, oil filter and fuel pump from the engine unit; slacken off the brake servo mountings.

9. ***Left-hand drive saloon cars:*** Remove the battery and battery carrier from the engine compartment and when fitted, the windscreen washer bottle, remove the drain pipe from the inlet manifold, slacken off the brake servo unit mountings.

10. Remove the bundy tubing from the clutch master and slave cylinders by releasing the union nuts and trapping any escaping fluid in a drip tray; slacken off the two master cylinders.

11. Ease the grommet from the bulkhead and slide it down the outer column.

12. Detach the steering unit from the underframe sidemember, identifying any shims between, by removing three nuts and washers.

13. Protect the inside of the car from oil, should it escape from between the inner and outer columns; lift up, and move the steering towards the front of the car and rotate it until the rocker shaft is uppermost and remove it from the engine compartment.

14. Remove the clip and packing as necessary, followed by the grommet from the outer column.

15. Refitting is the reverse of the removal sequence but particular attention must be given to the following:—

    (i) Position the grommet well down the outer column and the packing under the clip as necessary.

    (ii) Have the rocker shaft pointing upwards, feed the columns through the bulkhead and rotate the steering unit to its correct position as it is lowered into the engine compartment.

    (iii) Feed the large washers onto the three steering unit bolts and feed the bolts through from the wheel arch, refit the shims to their original positions and "nip-up" the three bolts; check the alignment of the steering column clip and instrument panel bracket, correct any misalignment by adjusting the thickness of the shim pack, ***this is important.*** Tighten the three bolts to the torque given in the "General Data Section".

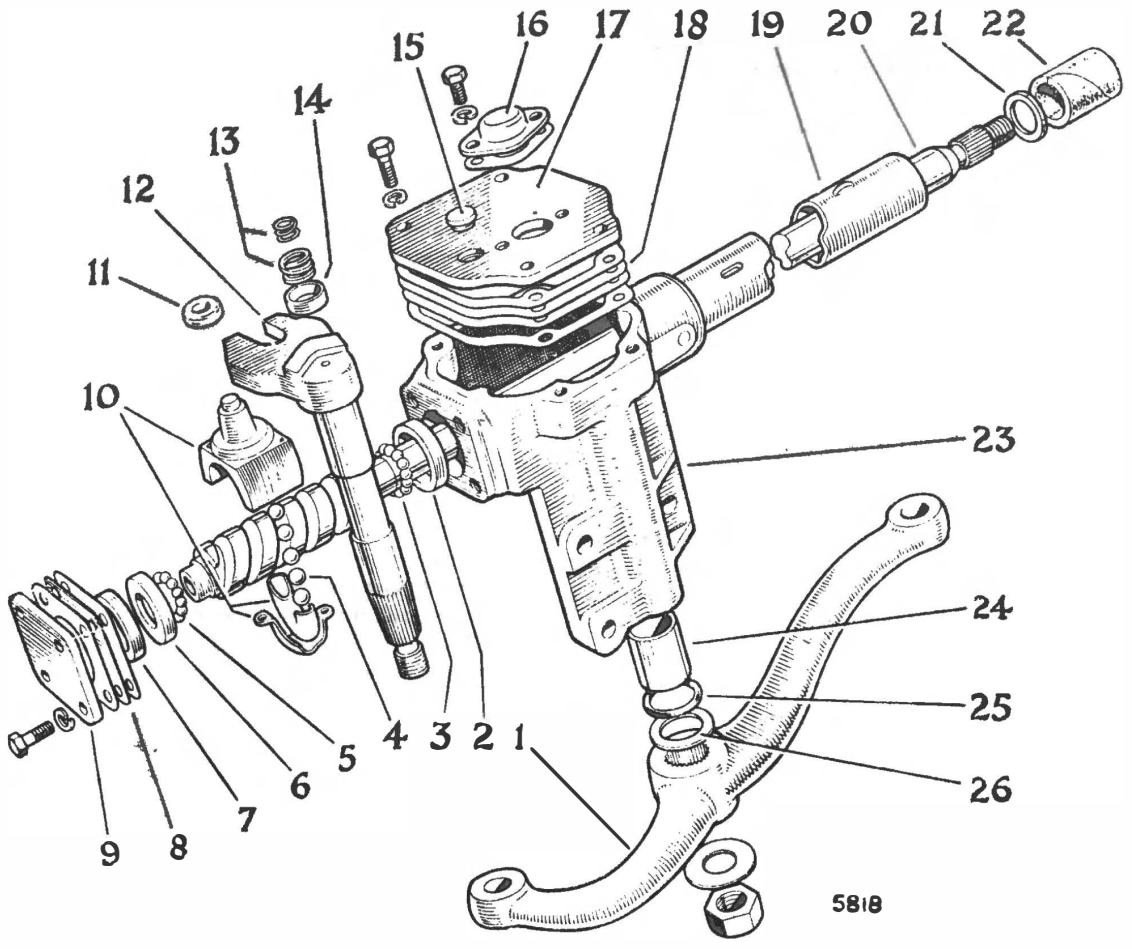

Fig. 4 *Exploded view of rigid type steering unit having the end cover method of adjusting inner column bearings.*

1. SWING LEVER
2. TOP BALL RACE
3. SMALL STEEL BALLS
4. LARGE STEEL BALLS
5. SMALL STEEL BALLS
6. BOTTOM BALL RACE
7. DISTANCE PIECE
8. PRELOAD SHIMS
9. END COVER
10. NUT ASSEMBLY
11. GUIDE ROLLER
12. ROCKER SHAFT
13. DAMPER SPRINGS
14. DAMPER BUTTON
15. FILLER PLUG
16. SPRING CAP
17. TOP COVER
18. ROCKER SHAFT SHIMS
19. OUTER COLUMN
20. INNER COLUMN
21. ABUTMENT WASHER (BURMAN ONLY)
22. FELT BUSH
23. STEERING BOX
24. ROCKER SHAFT BUSH (BURMAN ONLY)
25. RING SEAL
26. WASHER

(iv) The swing lever is located on the rocker shaft by a master spline.

(v) Bleed the clutch system of air, see under "Bleeding the system—Clutch, Section D".

(vi) Top-up the steering unit with lubricant, see under "Filling and topping-up steering unit".

To dismantle and reassemble

1. Clean and mount the steering unit in a vice so the steering column is horizontal.

2. Remove the two springs and damper button through the top cover after removing the spring cap and paper joint by withdrawing two bolts and washers.

3. Remove the top cover, paper joints and shim pack from the steering box by withdrawing four bolts and washers; preserve the shim pack for future use.

4. Remove the guide roller and rocker shaft from the extension of the nut and drain the steering unit of oil.

5. Withdraw the outer column, paper joints and shims over the inner column by removing the three bolts and washers, preserve the shim pack for future use; alternately, remove the end cover, paper joints and shim pack from the lower end of the steering box by withdrawing four bolts and washers, preserve the shim pack for future use.

6. Hold the hand over the upper end of the steering box to trap the steel balls as the steering column is withdrawn a short distance or, alternately over the lower end, to trap the distance piece, bottom ball race and steel balls as the steering column is ejected a short distance; in both instances, the set of steel balls at the opposite end of the worm cam will drop into the steering box and must be retrieved later.

7. Hold the nut steady and withdraw the inner column from the steering box by rotating the inner column in the appropriate direction, withdraw the nut from the steering box and remove the top ball race from the inner column as necessary.

8. Extract the steel balls from the nut and transfer tube, no useful purpose is served by dismantling the nut as replacement parts are not available.

9. Remove the steering box from the vice and retrieve the second set of steel balls, remove the felt bush and abutment washer from the top end of the outer column as necessary; drift out the bottom ball race when it is known to be well worn after collapsing the welch washer, or alternately, remove the top ball race using a long rod through the length of the outer column.

10. Remove the washer and ring seal from the outer end of the rocker shaft housing by relieving the "peening" with a suitable scraper.

11. ***Burman units only:*** Renew the bush in the rocker shaft housing when it is known to be well worn, see under "Rocker shaft bush, Burman—To renew".

12. Reassembly is the reverse of the dismantling sequence but particular attention must be given to the following:—

(i) ***Cam gear units:*** When the rocker shaft bushes are known to be well worn a replacement outer column and steering box must be obtained.

(ii) The fitting of the rocker shaft oil seal is better left until the rocker shaft has been fitted.

(iii) Soak the felt bush in a graphite-based oil for six hours before refitting and ensure that the top end of the inner column does not displace the abutment washer and felt bush from the outer column, ***the Cam Gear unit*** has no abutment washer.

(iv) Check that the nut is a correct match for the worm cam of the inner column, see under "Steering ratio and cam helix—To check".

(v) The steel balls can be retained in the two ball races and nut with Shell Retinax "A" grease.

(vi) Fit the outer column or end cover without any paper joints or shim pack at this juncture and preload the worm cam bearings, see under "Inner column bearings—To preload".

(vii) Refit and centralise the rocker shaft, so its forked lever locates the extension of the nut, follow with the guide roller, paper joints, shim pack and top cover, see under "Rocker shaft endfloat—To check and adjust", refit the damper button and springs.

(viii) Examine the splines on the external end of the rocker shaft and remove all burrs; refit the ring seal and retaining washer by peening over the outer edge of the rocker shaft housing.

(ix) No useful purpose is served by filling the steering unit with lubricant as it can spill out and foul the interior of the car during the fitting sequence, but label it accordingly.

ROCKER SHAFT BUSH (Figs. 3 and 4)

The Burman steering unit has a single bush at the bottom end of the rocker shaft housing which is lubricated by oil direct from the steering box. The bush can be renewed. The Cam Gear steering unit has two bushes, one at each end of the rocker shaft housing, the top bush is lubricated by oil direct from the steering box and the bottom bush lubricated by oil from the steering box through a drilling which breaks out between the two bushes. These bushes cannot be renewed.

To renew (Burman units only)

1. Dismantle the steering unit, see under "Steering unit—To dismantle and reassemble".

2. Remove the washer and ring seal from the outer end of the rocker shaft housing by relieving the "peening" with a suitable scraper.

3. Eject the rocker shaft bush from the rocker shaft housing with a suitable drift.

4. Determine the edge of the bush having the start and finish of the oil groove and press the bush, this end first, into the rocker shaft housing until the opposite end is flush with the bottom of the oil seal recess.

5. Check the diameter and finish of the bush and when necessary ream the bush to $\frac{7}{8}$ in. (22·22 mm.).

6. The refitting of the ring seal is best left until the rocker shaft has been fitted.

INNER COLUMN BEARINGS (Figs. 3 and 4)

Burman units ·0015 in. (·038 mm.) preload

Cam Gear units No perceptible endload whatsoever

The inner column bearings, situated above and below the worm cam, are preloaded by the above amount and this is adjusted by the disposition of shims either between the outer column flange or end cover and the steering box.

It is impracticable to set the preload with the steering unit in the car.

Paper joints and shims for this purpose are available in various thicknesses as given in the "Parts List" for that particular car and steering unit.

To preload

1. Assemble the inner column and nut to the steering box, see under "Steering unit—To dismantle and reassemble"; refit the outer column or end cover without any paper joints or shim pack and "nip up" the three or four bolts.

2. Determine the width of the gap between the outer column flange or end cover and the steering box, subtract the preload specified above and select a shim pack with a paper joint each side to the new dimensions using the previous shim pack as necessary.

3. Remove the outer column or end cover from the steering box and refit together with the selected joint washers and shims between; fully tighten the bolts.

ROCKER SHAFT ENDFLOAT (Figs. 3 and 4)

Burman units ·004 to ·008 in. (·10 to·20 mm.)

Cam Gear units ·0025 to ·005 in. (·06 to ·12 mm.)

The rocker shaft endfloat is checked with the steering in the straight ahead position and it is set by the disposition of shims between the top cover and the steering box.

The rocker shaft endfloat can be set with the steering unit on the bench or fitted in the car.

Paper joints and shims for this purpose are available in various thicknesses as given in the "Parts List" for that particular car and steering unit.

To check and adjust

1. Fit the swing lever nut to the rocker shaft and with the spring cap, damper springs and button removed from the steering box, mount a dial test indicator on the top cover so the stylus passes through the top cover and bears against the top of the rocker shaft which must be in the straight ahead position, i.e., its mid-point of travel.

2. Move the rocker shaft in or out of the steering box to its fullest extent, by gripping the swing lever nut, and set the dial test indicator to zero; move the rocker shaft in the opposite direction and read the actual endfloat on the dial test indicator.

3. Increase or decrease the endfloat by adding to or subtracting from the existing paper joints and shims to obtain the endfloat specified after removing the top cover by withdrawing four bolts.

Rocker shaft endfloat is checked and reset with the steering unit in the car as follows:—

1. Apply the handbrake, set the front wheels in the straight ahead attitude by setting them parallel to the rear wheels, jack up the front of the car, position a drip tray beneath the steering unit and thoroughly clean the top cover of the steering unit.

2. Remove the spring cap, paper joint, damper springs and button from the top of the rocker shaft inside the steering unit by withdrawing two bolts and washers.

3. Proceed as described in the foregoing paragraphs, 1 to 3.

4. Refit the damper buttons, springs, paper joint and spring cap to the top cover with two bolts and washers.

5. Top-up the steering box with oil, see under "Filling and topping-up the steering unit", clean off any overflow of oil.

FELT BUSH (Figs. 3 and 4)

The felt bush is a strip of special material with oblique cut ends to give the top end of the inner column maximum support within the outer column. It is impregnated with a graphite-based oil to prolong its life and will normally require no attention.

Should the felt bush wear, inefficient cancelling of the direction indicator switch or rattling may result and the felt bush must be renewed; when a squeak develops, lubricate with a few drops of graphite-based oil.

To renew

1. Remove the steering column cowling, horn ring, steering wheel, direction indicator switch and striker from the top ends of the steering columns, see under those respective headings.

2. Using a small probe, locate the join in the felt bush and prise the small end upwards; once the point of the felt bush is proud of the outer column, the remainder can be extracted with a pair of pliers; the abutment washer of Burman units will remain *in situ*.

3. While the felt bush is dry, chamfer one of the bottom edges and soak in a graphite-based oil for six hours.

4. Form the felt bush round the inner column, chamfer edge downwards and inwards; work downwards between the inner and outer columns with a small probe until its top edge is ·25 in. (6·35 mm.) below the top of the outer column.

5. Refit the direction indicator striker, switch, steering wheel, horn ring and steering column cowlings, see under those respective headings.

STEERING RATIO AND WORM CAM HELIX

(Fig. 5.)

	Ratio	*Lead*
Alpine	14 : 1	·700 in. (17·79 mm.)
Minx, Gazelle, Super Minx, Vogue, Rapier, Sceptre	16·4 : 1	·625 in. (15·88 mm.)

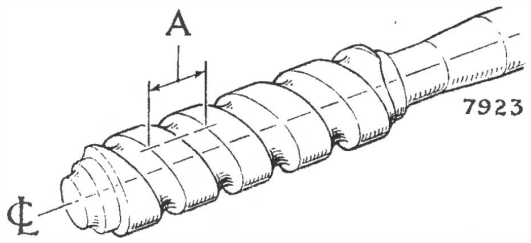

Fig. 5 *The worm cam end of the inner column showing method of determining the steering ratio. Measure the lead "A" parallel to worm gear centre line.*

it is imperative that the nuts are not interchanged from one ratio inner column to another as steering failure will result.

To check

To determine the ratio of any inner column, measure the lead of the helix and compare with those specified. The lead of the helix is the "travel" of one turn, measured parallel to its axis along the worm cam.

To determine the ratio of the nut, read the three figures stamped on its body and compare with the specified lead and then read the ratio given on the same line. The nut of the 14 : 1 ratio nut accommodates fourteen steel balls while the nut of the 16·4 : 1 ratio only thirteen steel balls.

The right-hand drive steering unit has a worm cam with a left-hand helix while the left-hand drive steering unit has a right-hand helix. When the steering wheel is rotated clockwise, whether on right- or left-hand drive cars, the swing lever will rotate in an anti-clockwise direction when viewed through the engine compartment.

BURMAN ADJUSTABLE STEERING UNIT

Fig. 6.

The Burman adjustable steering unit is of the re-circulating ball type and has the outer column attached to the steering box by a flange and three bolts. An extension piece fitted inside the inner column, provides 2½ in. (63·5 mm.) variation in the height of the steering wheel.

The bottom end of the inner column is similar to that of the rigid units but its tubular upper end is swaged out and the inner surface splined to accommodate the splined extension piece. The outer end of the splined extension piece has a taper, parallel splines and a thread on which to mount the steering wheel.

The splined extension piece is retained and its upward and downward travel limited by the protruding end of a dowel, pressed into the swaged end of the inner column, locating an axial groove machined in the splined extension piece. The latter is slotted at the bottom end and has an internal taper to accommodate the cross dowel and male taper of the expander bolt fitted through its centre.

An expander bolt extension is fitted on the protruding end of the expander bolt and the steering wheel adjusting nut is located by two flats and secured by a bolt. The expander bolt extension has a small flange on its bottom end which will bear against the underside face of the horn ring and releases the expander bolt as the steering wheel adjusting nut is slackened off.

A nylon circlip, fitted on the protruding end of the expander bolt and beneath the expander bolt extension prevents the expander bolt dropping out of the splined extension piece when the expander bolt extension is removed. The inner column is plugged with a rubber bung to prevent the expander bolt dropping into the hollow centre of the inner column should ever the nylon circlip be inadvertently removed.

The inner column is supported in the outer by a spring-loaded ball bearing assembly.

To remove and refit

The removal and refitting sequence for the adjustable steering unit are identical to those of the rigid unit, see under "Steering unit—To remove and refit" (Rigid and adjustable steering units).

To dismantle and reassemble

The dismantling and assembly sequence for the adjustable steering unit are similar to those of the rigid unit with the flanged outer column but with the following additional operations:—

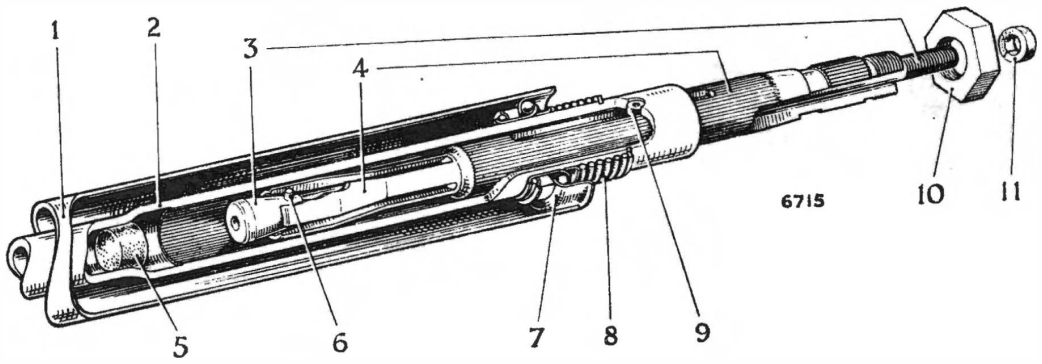

Fig. 6 *Cut-away section of adjustable steering column.*

1. OUTER COLUMN
2. INNER COLUMN
3. EXPANDER BOLT
4. SPLINED EXTENSION PIECE
5. RUBBER BUNG
6. CROSS DOWEL
7. BALL BEARING RACE
8. SPRING AND CIRCLIP
9. DOWEL
10. STEERING WHEEL NUT
11. NYLON CIRCLIP

1. Before dismantling the steering box, remove the ball bearing assembly from the top end of the outer column by removing the circlip and spring from the inner column.

2. Withdraw the splined extension piece complete with expander bolt from the inner column by extracting and subsequently discarding the dowel; when there are two dowel holes, identify the dowel hole in use. A tapped hole, to facilitate extraction, is provided in the centre of the dowel.

3. Withdraw the expander bolt from the splined extension piece by removing the nylon circlip.

4. No useful purpose is served by removing the rubber bung from inside the inner column.

5. Reassembly is the reverse of the dismantling sequence but particular attention must be given to the following:—

   (i) Check the presence of the rubber bung inside the inner column, its correct position is just below the bottom of the swaging.

   (ii) Smear the tapered end of the expander bolt, the splines in the inner column and the splined extension piece with Shell Retinax "A" Grease.

   (iii) The expander bolt is fed into the splined extension pieces so the cross dowel, through its tapered end, locates two cuts in the splined end of the splined extension piece, fit the nylon circlip just below the protruding thread of the expander bolt.

   (iv) The splined extension piece is fed into the inner column so its groove aligns with the identified dowel hole, check that it is a sliding fit. When a replacement inner column is being fitted use the dowel hole which will produce a dimension of ·852 to ·907 in. (21·64 to 23·04 mm.) between the centre of the dowel hole and the wider end of the steering wheel mounting taper when the splined extension piece is in the lowest position.

   (v) A new dowel must be used, but it must not destroy the free movement of the splined extension piece.

Should it be necessary, the adjustable section in the top of the inner column can be dismantled with the steering unit remaining in the car in the following manner:—

1. Remove the steering column cowling, direction indicator switch, horn ring and steering wheel, see under those respective headings.

2. Proceed with operation No. 2 onwards of the foregoing sequence.

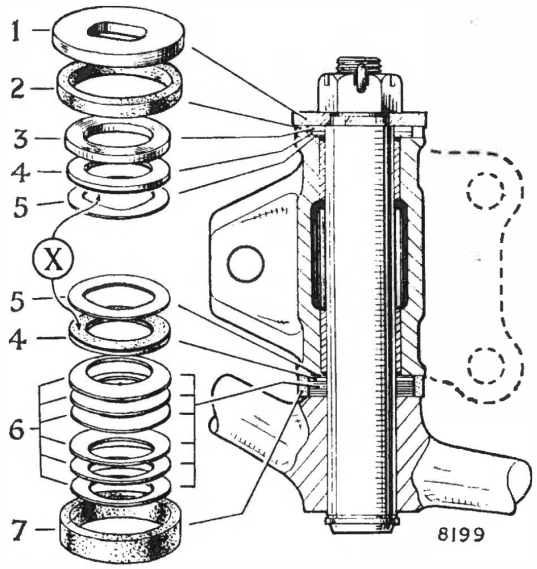

Fig. 7 *Cross section-through steering relay lever assembly and exploded view of bearing and Belleville washers.*

1. THRUST WASHER
2. NARROW SEALING RING
3. DISTANCE PIECE
4. P.T.F.E. washer
5. BEARING WASHER
6. BELLEVILLE WASHER PACK
7. LARGE SEALING RING

"X" P.T.F.E. SURFACES

RELAY LEVER ASSEMBLY

Fig. 7.

The relay lever is fitted on the opposite side to the steering unit and relays the steering movement of the front wheel nearest the steering unit to the opposite front wheel.

The rear end of the swing lever of the steering unit is connected to the rear end of the relay lever by a centre cross tube and movement is transferred to the front wheel by a short track rod fitted to the front end of the relay lever.

The circlip on the bottom end of the fulcrum pin is a safety measure and no useful purpose is served by removing it.

The bearings in the support bracket and particular washers above and below the support bracket have P.T.F.E.-coated bearing surfaces and the assembly will not require periodical lubrication in service.

To remove and refit

1. Detach the relay lever assembly from the underframe sidemember on the opposite side to the steering unit by removing three nuts, bolts and washers.

2. Remove the track rod and centre cross tube from the front and rear ends of relay lever by discarding the split pin and removing the castellated and self-locking nuts respectively from the tapered pins and using a suitable extractor, RG.190C; withdraw the relay lever assembly from beneath the car.

3. Refitting is the reverse of the removal sequence but particular attention must be given to the following:—

   (i) Set the front wheels in the straight ahead attitude by positioning them parallel to the rear wheels and fit the centre cross tube to the rear end of the relay lever.

   (ii) The heads of the three attachment bolts are positioned under the front wheel arch.

   (iii) Check the front wheel alignment, see under "Front wheel alignment—To check Front Suspension, Section F", and fit a new split pin to the castellated nut of the ball pin.

To dismantle and reassemble

1. Identify the relay lever to the nearest end of the support bracket, withdraw the relay lever and fulcrum pin assembly from the support bracket by discarding the split pin and removing the castellated nut, thrust washer, narrow sealing ring, distance piece, P.T.F.E. and bearing washers from the top of the support bracket.

2. Remove the support bracket, wider sealing ring, bearing and P.T.F.E. washers, followed by the Belleville washer pack from the fulcrum pin.

3. As the fulcrum pin is a heavy interference fit in the relay lever, no useful purpose is served by separating them.

4. Drift the two bush bearings out of the support bracket when they are known to be well worn.

5. Reassembly is the reverse of the dismantling sequence but particular attention must be given to the following:—

(i) Renew the two bush bearings, see under "Bush bearings—To renew"; it is important that the prefinished P.T.F.E. bearing surface is not damaged.

(ii) Ensure that the upper end of the fulcrum pin is free from burrs. When the fulcrum pin is well worn a new fulcrum pin and relay lever must be fitted.

(iii) Coat all parts with Shell Retinax "A" grease during assembly.

(iv) In the interests of good steering it is advisable to fit a new pack of Belleville washers; assemble the six Belleville washers into two parallel packs of three each and place together so the raised outer edges are in contact with one another and feed onto the fulcrum pin.

(v) The thicker sealing ring is fitted to the bottom end of the fulcrum pin to protect the Belleville washers, the thinner sealing ring is fitted to the top end.

(vi) The treated (dark) side of the P.T.F.E. washers abut to the bearing washers and the bearing washers abut to the top and bottom faces of the support bracket.

(vii) Feed the fulcrum pin into the support bracket so the bottom front bolt hole is adjacent to the short end of the relay lever.

(viii) Load the Belleville washer pack by tightening the castellated nut to a torque of 60 lbs. ft. (8·3 kg.m.) and slackening off 1¼ flats, fit a new split pin; when the split pin hole and nut do not align, **slacken off** the castellated nut to effect alignment.

BUSH BEARINGS (Fig. 7)

To renew

The relay lever bush bearings are of the P.T.F.E. type and they will require no periodical lubrication, however, during the assembly sequence of the relay lever assembly, Shell Retinax "A" grease must be applied.

1. Dismantle the relay lever assembly, see under "Relay lever assembly—To dismantle and reassemble".
2. Eject the two bush bearings from the support bracket with a suitable drift.
3. Press the two bush bearings into the support bracket using a suitable tool until the outer edges of both bush bearings are just below the top and bottom faces of the support bracket. It is important that the P.T.F.E. bearing surface is not disturbed by the press tool.
4. Reassemble the relay lever assembly using Shell Retinax "A" grease.

STEERING LINKAGE

CENTRE CROSS TUBE

The centre cross tube connects the rear ends of the steering unit swing lever and relay lever and passes behind the cylinder block above the clutch bell housing.

The centre cross tube is of a fixed length with a tapered pin at both ends each mounted in a rubber bush, the taper pins and rubber bushes cannot be renewed but their life is considerable providing they are not under any torsional stress when the steering is in the straight ahead attitude.

To remove and refit

1. Remove the centre cross tube from the steering unit swing lever and relay lever by removing the two nuts from the tapered pins and using a suitable extractor, RG.190C.
2. Refitting is the reverse of the removal sequence but particular attention must be given to the following:—

(i) Set both front wheels in the straight ahead attitude by positioning them parallel to the rear wheels and fit the tapered pins to the swing and relay levers, this will ensure that the rubber bushes are not under any torsional strain.

(ii) Check the front wheel alignment, see under "Front wheel alignment—Front suspension, Section F".

TRACK RODS

The two track rods, which are symmetrical, connect the front ends of the steering unit swing lever and the relay lever with the steering arms mounted on the stub axle carrier.

For the purpose of setting front wheel alignment the length of the track rods is adjustable and it is important that the length of both track rods is equal otherwise the wheel lock and Ackerman angles will be incorrect.

The track rod has a ball joint at each end and these are threaded left or right hand; thus by releasing the locknuts and rotating the centre tube, the length of the track rod can be altered without removing any of the ball joints from the swing or relay levers and steering arm.

To remove and refit

1. Remove the ball joints from the steering unit swing lever or relay lever and steering arm by discarding the split pins, removing the castellated nuts and extracting the tapered ball pins with a suitable extractor, RG.190C.

2. Refitting is the reverse of the removal sequence but particular attention must be given to the following:—

   (i) Check that the length of the two track rods and set them equal, set the two tapered ball pins in opposite directions but do not fully tighten the locknuts at this juncture.

   (ii) The left-hand threaded ball joint is fitted to the steering arm so the tapered ball pin points downward.

   (iii) Lock the castellated nuts with new split pins.

   (iv) Check the front wheel alignment and Ackerman angles, see under those respective headings in "Front suspension, Section F". Both track rods must be of the same length.

   (v) When working from the side of the car and with the left-hand threaded ball joint fitted to the steering arm, rotate the centre tube:—

   Anti-clockwise to lengthen

   Clockwise to shorten.

   When working beneath the car, the rotation will be in the opposite direction.

BALL JOINTS

To remove and refit

1. Grip the ball joint socket and slacken off the locknut.

2. Detach the ball joint from the steering arm, swing or relay levers by discarding the split pin, removing the castellated nut and extracting the tapered ball pin using a suitable extractor, RG.190C.

3. Remove the ball joint from the centre of the track rod by rotating it in the appropriate direction.

4. Refitting is the reverse of the removal sequence but particular attention must be given to the following:—

   (i) The left-hand threaded ball joint is fitted to the steering arm, the right-hand threaded ball joint is fitted to the swing or relay levers.

   (ii) Lock the castellated nut with a new split pin.

   (iii) Check the front wheel alignment and Ackerman angles, see under those respective headings in "Front suspension, Section F".

   (iv) Ensure that the ball joint socket is centrally disposed on its tapered ball pin when in the fitted position.

Ball joint cover—To renew

The ball joint cover is made of rubber, it is a tight fit on the tapered ball pin and secured to the ball joint socket either by a circlip or an endless spring. The cover is available as a replacement part and can be renewed when it has deteriorated or become damaged. However, when the deterioration or damage is of long standing, road dirt may have penetrated to between the bearing surfaces, thus it will be more satisfactory to fit a new ball joint.

1. Detach the ball joint from the steering unit swing lever, relay lever or steering arm by discarding the split pin, removing the castellated nut and extracting the tapered ball pin with a suitable extractor, RG.190C.

2. Remove the cover from the ball joint by releasing the circlip or endless spring, in the latter instance a washer will be under the cover.

3 Refitting is the reverse of the removal sequence but particular attention must be given to the following:—

(i) Ensure that the ball joint socket is centrally disposed on its tapered ball pin when it is in the fitted position.

Ball joint—To check wear

The ball joint is a sealed unit and requires no lubrication. It consists of a socket which houses a tapered ball pin, bearing cups and a spring. It is protected from road dirt by a rubber cover.

1. Grip the ball joint socket and attempt to move it up and down on its tapered ball pin. When any clearance is evident a new replacement must be fitted.

2. While an assistant moves the steering wheel from side to side a short distance, observe the sideways movement between the ball joint socket and the tapered ball pin. When any sideways movement is detected a new replacement must be fitted.

STEERING ARM

To remove and refit

The steering arms are mounted on the inside face of the stub axle carriers and point to the rear of the car, the rear attachment bolts also secure the top lug of the brake calipers.

1. Detach the ball joint of the outer track rod from the steering arm by discarding the split pin, removing the castellated nut and extracting the tapered ball pin using a suitable extractor, RG.190C.

2. Remove the steering arm from the stub axle carrier by withdrawing two bolts and slackening off the bottom caliper bolt which is then retightened to hold the brake caliper in position.

3. Refitting is the reverse of the removal sequence but particular attention must be given to the following:—

(i) The steering arm is fitted so it points rearward and with the small end of the tapered hole downward.

(ii) Check the front wheel alignment and Ackerman angles, see under those respective headings in "Front suspension, Section F".

DIAGNOSIS OF STEERING FAULTS

Steering faults can arise from causes other than incorrect front suspension angles and steering alignment or accident damage. The more common causes of bad steering are as follows:—

1. Lack of lubricant in steering unit.
2. Incorrectly adjusted steering unit.
3. Loose steering unit or relay lever assembly.
4. Wear in steering linkage.
5. Under-inflated tyres.
6. Unequally worn tyres.
7. Tyres of different tread pattern.
8. Road wheels out of balance.
9. Incorrect endfloat setting in front hubs.
10. Faulty shock absorbers.
11. Defective road springs.
12. Mis-alignment of rear axle.

BRAKES

SECTION K2

CONTENTS

	Page
ADJUSTMENTS ...	K2— 3
—Front brakes	K2— 3
—Handbrake ...	K2—20
—Initial adjustment	K2—11
—Rear brakes ...	K2— 3
BACK PLATE ...	K2—13
—To remove and refit	K2—13
BLEEDING THE HYDRAULIC SYSTEM	K2—14
—Bleed screws	K2—14
—Checking for leaks ...	K2—15
BRAKE ADJUSTING MECHANISM	K2—11
—Initial adjustment	K2—11
BRAKE PADS ...	K2— 6
—To examine for wear	K2— 7
—To remove and refit	K2— 7
BRAKE PEDAL ASSEMBLY ...	K2—21
—To remove and refit	K2—21
—To dismantle and reassemble	K2—21
BRAKE PIPE RUN ...	K2—15
—Bending metal pipes	K2—15
—Union nuts ...	K2—15
BRAKE SHOES ...	K2— 9
—To examine for wear	K2— 9
—To remove and refit	K2— 9
CALIPERS ...	K2— 7
—To remove and refit	K2— 7
—To dismantle and reassemble	K2— 7
DISCS ...	K2— 8
—Run-out	K2— 8
—To check	K2— 8
—To remove and refit	K2— 8
FAULT FINDING CHART ...	K2—28
FLEXIBLE HOSES ...	K2—15
—To remove and refit	K2—16
FRONT DISC BRAKES ...	K2— 6

	Page
GENERAL DESCRIPTION	K2— 3
GIRLING SERVICE KITS	K2—18
HANDBRAKE	K2—19
—Handbrake adjustment	K2—20
HANDBRAKE CABLE	K2—19
—To remove and refit	K2—19
HANDBRAKE LEVER	K2—19
—To remove and refit	K2—19
HANDBRAKE ROD	K2—20
—To remove and refit	K2—20
HYDRAULIC SYSTEM	K2—14
MAINTENANCE	
—Brake pad and shoe renewal	K2— 3
—Front brake adjustment	K2— 3
—Rear brake adjustment	K2— 3
—Brake fluid level	K2— 3
—Renewing the brake fluid	K2— 4
—Flushing the hydraulic system	K2— 4
—Flexible hoses	K2— 4
MASTER CYLINDER	K2—18
—To remove and refit	K2—17
—To dismantle and reassemble	K2—17
MASTER CYLINDER RESERVOIR	K2—16
—To remove and refit	K2—16
NON-RETURN VALVE	K2—27
—To remove and refit	K2—27
PREVENTIVE MAINTENANCE	K2— 5
REAR DRUM BRAKES	K2— 9
RENEWING SEALS	K2— 5
REPLACEMENT SERVICE UNITS	K2— 5
SERVO AIR CLEANER	K2— 5
—To remove and refit	K2— 5
SHOE HORN (Brake shoe removing tool)	K2—27
VACUUM SERVO UNIT	K2—23
—Operation	K2—23
—Servicing	K2—24
—To remove and refit	K2—24
—To dismantle and reassemble	K2—24
—Testing equipment	K2—26
WHEEL CYLINDERS	K2—11
—To remove and refit	K2—11
—To dismantle and reassemble	K2—13

GIRLING BRAKES

GENERAL DESCRIPTION

These cars are equipped with Girling Brakes, disc brakes are fitted to the front wheels and drum brakes to the rear wheels. All four brakes are hydraulically operated, pressure being generated in the master cylinder by application of the brake foot pedal.

While the engine is running, this pressure is boosted by suspended vacuum servo unit to ensure light pedal pressure.

The handbrake operates the rear brakes only by an independent mechanical linkage.

MAINTENANCE

Maintenance checks will be required at regular intervals as given in the "Owner's Service Book" and will include the following:—

(i) Checking master cylinder fluid level.

(ii) Checking brake pads for wear and transposing to equalise wear.

(iii) Checking brake shoes for wear and cleaning out drums.

(iv) Checking flexible hoses for chafing, deterioration and leakage.

(v) Checking hydraulic pipes, connections, master cylinder calipers and wheel cylinders for leaks and damage.

(vi) Lubricating foot pedal pivot, handbrake lever and linkage.

(vii) Checking security of master cylinder, calipers, back plates, metal pipes and servo unit.

(viii) Checking caliper and wheel cylinder pistons for freedom of movement and corrosion.

(ix) Checking brake discs and drums for scoring.

(x) Renewing vacuum servo air cleaner, when applicable.

(xi) Renewing the brake fluid.

(xii) Renewing the flexible hoses and the seals in all hydraulic units.

Brake pad and shoe renewal

The brake pads should be renewed when the friction material has worn down to $\frac{1}{8}$ in. (3 mm.) thick and must be renewed when the minimum thickness of $\frac{1}{16}$ in. (1·6 mm.) is reached.

The brake shoes must be renewed when the linings have worn down to rivet level.

Front brake adjustment

The front brakes require no adjustment as the reducing thickness of the brake pads is automatically cancelled out by the fluid in the hydraulic system, thus the fluid level in the master cylinder reservoir will fall as the brake pads reduce in thickness.

Rear brake adjustment

Automatic

The rear brakes require no adjustment as the reducing thickness of the brake linings is automatically cancelled out each time the handbrake is applied.

Manual

The rear brakes require adjustment at intervals dependent upon conditions of usage. Refer to manually adjusted rear brakes—adjustment. See pages 29 and 30.

Brake fluid level

1. The brake fluid level in the master cylinder reservoir must be kept within $\frac{1}{2}$ in. (12 mm.) of the filler cap orifice.
2. Never fill the master cylinder reservoir completely since the expansion of the brake fluid, particularly in hot weather, may cause hydraulic pressure to build up and the brakes to bind.
3. Use only the recommended type of brake fluid, see under "Recommended Lubricants—Section P".
4. Exercise care not to spill any brake fluid on the car body as it is injurious to paintwork.
5. Before removing the filler cap from the master cylinder reservoir, clean the area around both components to prevent dirt entering the hydraulic system.
6. Ensure that the seal in the filler cap is in good condition and its air vent is unobstructed, as the obstruction may cause hydraulic pressure to build up and the brakes to bind.
7. The addition of brake fluid may be required to compensate the lowering of the fluid level due to the reducing thickness of the brake pads, but a sudden fall in fluid level will indicate a leak somewhere in the hydraulic system which must immediately be traced and rectified.

Renewing the fluid

1. Pump the old fluid from the hydraulic system by slackening off the bleed screw nearest to the master cylinder half to three-quarters of a turn and when the fluid ceases to flow retlghten the bleed screw. Proceed with the next nearest and finish at the bleed screw furthest from the master cylinder in a similar manner. Discard all the old fluid.

2. Remove the master cylinder reservoir and wash out thoroughly with Girling Cleaning Fluid or Commercial Methyl Alcohol and dry off, see under "Master cylinder reservoir—To remove and refit".

3. Remove the calipers completely from the car, withdraw the two pistons from each and wash out thoroughly with Girling Cleaning Fluid or Commercial Methyl Alcohol and dry off, see under "Caliper—To remove and refit" and "To dismantle and reassemble".

4. Refill the master cylinder reservoir with the recommended brake fluid, see under "Recommended Lubricants—Section P" and bleed the hydraulic system of air, see under "Bleeding the hydraulic system".

Alternative method

Alternatively, the brake fluid can be renewed by continually topping up the master cylinder reservoir with fresh brake fluid above the recommended level and "bleeding" each bleed screw in turn until clean brake fluid is seen to flow from each bleed screw. It is **imperative** that air is not permitted to enter the hydraulic system by insufficient topping up, four depressions of the brake pedal will almost empty the master cylinder reservoir. It is **important** too that the brake pedal is depressed sharply but permitted to return unassisted after a short pause.

Flushing the hydraulic system

Renewing hoses and seals

When the hydraulic system has become contaminated with an incorrect fluid it must be flushed out immediately and refilled with fresh brake fluid of the recommended type. Should ever the contamination be caused by a mineral oil, in addition to the flushing, all hoses and seals must be renewed.

1. Pump the old fluid from the hydraulic system by slackening off the bleed screw nearest to the master cylinder half to three-quarters of a turn and when the fluid ceases to flow retighten the bleed screw. Proceed with the next nearest and finish at the bleed screw furthest from the master cylinder in a similar manner. Discard all the old fluid.

2. Remove the master cylinder reservoir and wash out thoroughly with Girling Cleaning Fluid or Commercial Methyl Alcohol and dry off, see under "Master cylinder reservoir—To remove and refit".

3. Remove the calipers completely from car, withdraw two pistons from each and wash out thoroughly with Girling Cleaning Fluid or Commercial Methyl Alcohol then dry off, see under "Caliper—To remove and refit" and "To dismantle and reassemble".

4. When there has been no contamination fill the master cylinder reservoir with Girling Cleaning Fluid or Commercial Methyl Alcohol and pump out through each bleed screw, while continuing to refill the master cylinder reservoir until at least a quart (1·1 litres) has passed through each bleed screw; discard all the old fluid.

5. When contamination has been experienced, remove the remaining hydraulic units, dismantle, clean, and refit new seals to all units, see under their respective headings. Wash out and dry off the metal pipes but **renew** all flexible hoses and the stop light switch.

6. Refill the master cylinder reservoir with the recommended brake fluid, see under "Recommended Lubricants—Section P" and bleed the hydraulic system of air, see under "Bleeding the hydraulic system".

Flexible hoses

The flexible hoses must be examined for chafing, general deterioration and leakage. When there is any doubt concerning the condition of the flexible hose it must be renewed. Should a flexible hose become blocked, it must never be cleared by probing but renewed.

SERVO AIR FILTER

The servo unit air filter element is of moulded cellular construction and must be renewed when soiled.

To remove and refit

1. Remove the cover by withdrawing the centre screw, discard the soiled filter element, clean the cover and rubber washer.
2. Position the rubber washer on the servo unit followed by the new element and secure the cover with the centre screw.

RENEWING SEALS AND REPLACEMENT SERVICE UNITS

When the hydraulic system has become contaminated with a mineral oil or the brake fluid, through old age, has become "gummy"; the seals in all the hydraulic units must be renewed.

The most satisfactory method of seal renewal or overhauling any unserviceable hydraulic unit is to renew it with a Replacement Service Unit available through the spares channels. Full details of this Service will be found in the "Parts List" under "Replacement Service Units".

In certain overseas territories this procedure may be impracticable or when the workshop available is up to the "Fuel Injection Equipment" standard of cleanliness, Service Kits containing the seals and, when necessary, tubes of lubricants, are available and can be used for the overhaul of all hydraulic units.

PREVENTIVE MAINTENANCE OF THE BRAKING SYSTEM

In order to maintain peak efficiency of the hydraulic system, the brake manufacturers recommend:—

(i) Brake fluid is renewed every 18 months or 24,000 miles (40,000 km.), whichever is the sooner.

(ii) Flexible hoses are renewed every 3 years or 40,000 miles (65,000 km.), whichever is the sooner.

(iii) Seals are renewed in all hydraulic units every 3 years or 40,000 miles (65,000 km.) or at the third change of brake pads, whichever is the sooner.

FRONT DISC BRAKES

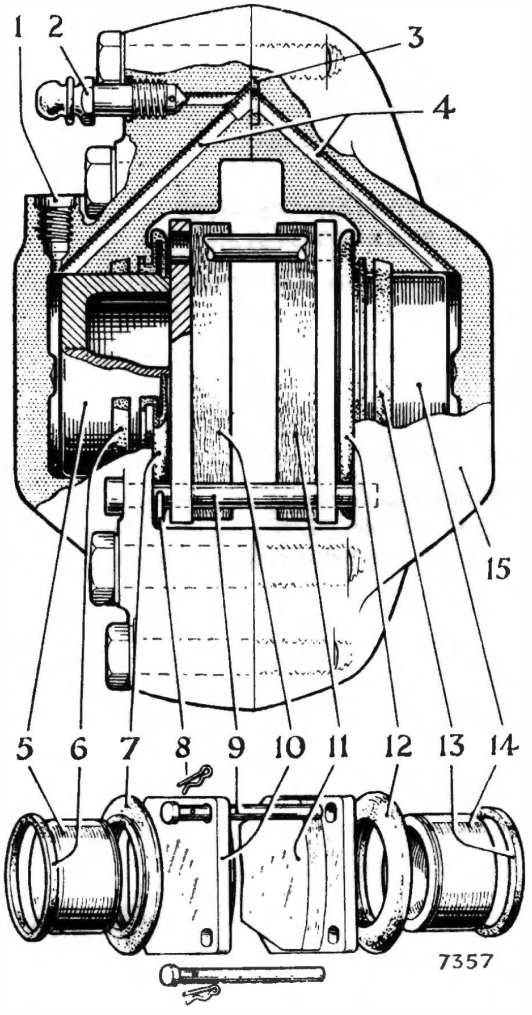

Fig. 1. *Exploded view of caliper assembly*

1. FLEXIBLE HOSE CONNECTION
2. BLEED SCREW
3. FLUID CHANNEL SEAL
4. INTERNAL FLUID CHANNEL
5. & 14. PISTONS
6. & 13. PISTON SEALING RINGS
7. & 12. DUST COVERS
8. RETAINING CLIPS
9. RETAINING PINS
10. & 11. BRAKE PADS
15. CALIPER BODY

DESCRIPTION

Each front brake assembly consists of a disc which is attached to and rotates with the hub and a caliper mounted on the stub axle carrier which straddles the rotating disc.

The caliper houses two co-axially aligned pistons operating on a pair of brake pads, one each side of the disc. The brake pads are retained in the caliper by pins and spring clips. The pistons and bores are protected by dust covers fitted in the open end of the bores and fluid leakage is prevented by rubber sealing rings fitted in annular grooves machined inside the bores.

A metal splash guard, fitted on the stub axle carrier, protects the inner face of the disc from road dirt while its outer face is protected by the road wheel.

Application of the brake pedal generates pressure in the hydraulic system causing the pistons to apply equal pressure on each brake pad moving the latter into contact with the disc.

When the brake pedal is released, pressure on the brake pads collapses but the pistons and brake pads remain in position for the next brake application. In this manner brake pad wear is automatically taken up, thus no manual adjustment is necessary.

After negotiating a ford or water splash, or after driving on flooded roads it may be necessary to lightly apply the brakes a number of times in order to dry out the brake pads and discs to maintain full braking power. It is also advisable to do this after or during prolonged driving in wet weather, in circumstances when the brakes are not often in use, such as may occur on motorways, etc.

BRAKE PADS

The friction material of the brake pad is bonded and in some instances riveted to the backing plate and can therefore only be renewed by the fitment of complete brake pad assemblies.

To examine for wear

1. Apply the handbrake, jack up the front of the car and remove the front wheel.
2. Observe the thickness of the friction material of the brake pads and renew accordingly.
3. When it is observed that one brake pad has worn thinner than the other, normally the inner, and providing it is outside the specified minimum, the brake pads can be transposed across the disc, see under "Brake pads—To remove and refit".

To remove and refit (Fig. 1)

1. Apply the handbrake, jack up the front of the car and remove the front wheel.
2. Withdraw the two brake pads from the caliper by removing the two retaining clips and pins.
3. Refitting is the reverse of the removal sequence, but particular attention must be given to the following:—
   (i) Check the condition and fitting of the rubber dust covers and renew or refit as necessary, see under "Caliper—To dismantle and reassemble".
   (ii) Check the fluid level in the master cylinder reservoir to assess the possibility of overflowing when the pistons are pressed into their calipers. The overflowing can be staunched by wrapping the reservoir in an absorbent cloth or by syphoning off some of the fluid. Top up to correct level on completion of the brake pad change.
   (iii) Ensure that the brake pads, discs and calipers are free from dirt and grease.
   (iv) Pump the brake pedal until solid resistance is felt.
   (v) Do not make snap applications of the brakes or expect full braking power until the brake pads have bedded into the disc.

CALIPERS

To remove and refit

1. Apply the handbrake, jack up the front of the car and remove the front wheel.
2. Detach the caliper from the stub axle carrier by withdrawing two bolts and washers.
3. Suspend the caliper nearby without straining the flexible hose. When it is necessary to remove the caliper from the car, disconnect the pressure pipe from the flexible hose and remove the flexible hose from the support bracket, see under "Flexible hose—To remove and refit".
4. Refitting is the reverse of the removal sequence but particular attention must be given to the following:—
   (i) The longer bolt is fitted through the top lug of the caliper and through the rear lug of the steering arm.
   (ii) Bleed the hydraulic system of air when the caliper has been removed from the car, see under "Bleeding the hydraulic system".
   (iii) Pump the brake pedal until solid resistance is felt.

To dismantle and reassemble (Fig. 1)

1. Remove the two brake pads from the caliper by withdrawing two retaining clips and pins.
2. Clean off all road dirt from the caliper and pistons. **Do not split the caliper in two,** see under "Bridge bolts".
3. Withdraw the pistons, one at a time from the caliper, through the dust cover and remove the two dust covers from the open end of the piston bores.
4. Remove the two sealing rings from the piston bores using a plastic or wooden probe to avoid damaging the annular grooves.
5. Reassembly is the reverse of the dismantling sequence but particular attention must be given to the following:—
   (i) All parts must be meticulously cleaned and reassembled under equally clean conditions.
   (ii) Dry and coat the bores in the caliper, pistons and sealing rings with a liberal coating of brake fluid.
   (iii) Work the sealing rings into the large annular groove in the piston bores with the fingers.
   (iv) Insert the protruding lip of one dust cover into the groove in the open end of the piston bore; feed the piston, closed end first, through the dust cover into the bore to its fullest extent and fit the outer lip of the dust cover into the groove in the piston. Repeat with the second piston and dust cover.

Caliper bridge bolts

NO attempt must be made to remove the caliper bridge bolts joining the two halves of the caliper together.

There is no point in doing so and in addition, the torque loadings to which the bridge bolts are tightened are critical.

When, in an emergency, the bridge bolts have been removed and, in the event of the fluid channel seal being undamaged, the caliper and bridge bolts must be scrupulously cleaned, dried and reassembled. Then, the bridge bolts tightened to the torque loadings given after the next paragraph. When reassembled, the caliper must be checked for fluid leaks under maximum pedal pressure while refitting it to the car by positioning a block of wood between the two pistons.

It must be understood that this will only provide a temporary remedy and the caliper must be returned to the manufacturers for overhaul at the first opportunity.

Bridge bolts—inner	60 lb. ft. (8·30 kg.m.)
Bridge bolts—outer	45 lb. ft. (6·22 kg.m.)

DISCS

Maximum run-out ·004 in. (·10 mm.)

The disc must be renewed when it has excessive run-out, suffered damage or become excessively scored.

Run-out

Excessive run-out of the disc causes the brake pads to knock the pistons back into the caliper and creates excessive pedal travel when the brakes are applied, thus it is important to keep the run-out to a minimum.

When the run-out exceeds the specified maximum, the disc can often be repositioned in relation to the hub to obtain a more satisfactory combination of manufacturing tolerances.

To check

1. Apply the handbrake, jack up the front of the car and remove the front wheel.
2. Prise off the hub cap, discard the split pin and tighten the castellated nut to a torque of 15—20 lb. ft. (2·07—2·76 kg.m.) whilst rotating the hub.
3. Mount a dial test indicator on the caliper or stub axle carrier so the stylus bears upon the disc approximately 1·00 in. (25 mm.) from the outer edge.
4. Rotate the disc and note the D.T.I. reading, when the "run-out" exceeds the specified maximum it may be sometimes reduced by repositioning the disc on the hub.
5. Set the hub endfloat, see under "Hub adjustment" in Section F.
6. Check the run-out as described in operations 3 and 4. Should the "run-out" exceed the specified maximum an investigation as to the condition of the hub bearings must be made.
7. Lock the castellated nut using a new split pin, fit the hub cap, front wheel and remove the jacks.

To remove and refit

1. Apply the handbrake, jack up the front of the car and remove the front wheel.
2. Remove the caliper from the stub axle carrier, see under "Caliper—To remove and refit", suspend nearby without straining the flexible hose.
3. Remove the disc and hub assembly from the stub axle, see under "Hubs—To remove and refit—Section F".
4. Remove the disc from the hub by withdrawing four bolts and washers.
5. Refitting is the reverse of the removal sequence but particular attention must be given to the following:—
   (i) Ensure the fitting faces of the hub and disc are free from dirt and burrs. In the instance of a replacement disc ensure that the protective coating is completely washed off.
   (ii) The four bolts are tightened to the torque given in the "General Data Section".
   (iii) The disc and hub assembly is refitted and the disc "run-out" checked, see under "Front hub—To remove and refit—Section F" and "Disc run-out—To check".
   (iv) Do not make snap brake applications or expect full braking power until the brake pads have bedded into the discs.

REAR DRUM BRAKES

DESCRIPTION

The rear brakes incorporate leading and trailing brake shoes operated by a single freely mounted wheel cylinder. Adjustment for lining wear is effected automatically each time the handbrake is applied by a pawl and ratchet mechanism incorporated in the wheel cylinder.

The two brake shoes are supported by platforms pressed in the back plate and spring loaded steady posts keep the brake linings parallel to the braking surface of the brake drum.

As hydraulic pressure is applied, the wheel cylinder piston moves the leading brake shoe outwards to the brake drum. As the leading brake shoe meets the brake drum, further movement of the wheel cylinder piston causes the wheel cylinder body to slide in the back plate and moves the trailing brake shoe outwards to the brake drum.

When the hydraulic pressure is released the pull-off springs return the brake shoes and wheel cylinder piston to their rest positions and the rotating brake drum centralises the brake shoes and wheel cylinder on the back plate.

BRAKE SHOES

The two brake shoes, known as leading and trailing, are fitted to each brake back plate and they are each steadied by a spring-loaded steady post.

The leading brake shoe is actuated by the piston of the wheel cylinder or handbrake lever while the trailing brake shoe is actuated by the reaction of the wheel cylinder body as its slides in the back plate slot.

Always fit factory-lined replacement brake shoes and new pull-off springs. These brake shoes have the correct type of lining which is ground accurately to size, thus ensuring an easy and quick bed-in to the brake drum.

To examine for wear

1. Chock the front wheels, release the handbrake, jack up the rear of the car and remove the rear wheel.
2. Remove the brake drum and distance piece from the hub by withdrawing a countersunk screw, clean all dust from the brake drum.
3. Observe the thickness of the brake lining above the rivets.
4. When they have worn down to rivet level, they must be renewed, see under "Brake shoes—To remove and refit".
5. Do not expect full braking power until the new brake linings have bedded into the brake drums.

To remove and refit (Fig. 2)

1. Chock the front wheels, release the handbrake, jack up the rear of the car and remove the rear wheel.
2. Remove the brake drum and distance piece, when fitted, from the hub by withdrawing a countersunk screw.
3. Withdraw the two brake shoe steady posts from the back plate by holding the head of the steady post and rotating the dished washer 90° and removing the spring and second dished washer.
4. Remove the toe end of the trailing brake shoe from the wheel cylinder tappet followed by the heel end from the fixed abutment, see Fig. 12.
5. The tension of the two pull-off springs is now released and the leading brake shoe can now be disengaged from the wheel cylinder lever.

   When the lining material has worn down to rivet level new brake shoes must be fitted.
6. Retain the piston and tappet within the wheel cylinder body by applying a rubber band.
7. Refitting is the reverse of the removal sequence, but particular attention must be given to the following:—
   (i) Check the security of the back plate bolts.
   (ii) Ensure that the wheel cylinder moves freely within the back plate slot; when this condition is evident, determine and eliminate the cause of the stiffness.
   (iii) Smear the slots in the fixed abutment and tappet with Girling White Brake Grease; lubricate the threads of the tappet and adjuster wheel together with the body of the adjuster wheel, normally inside the wheel cylinder body, with molybdenum disulphide grease.
   (iv) Free off the tappet in the adjuster wheel by turning it back 2½ turns after screwing it in to its fullest extent; this will ensure that the tappet is not threadbound, there must be as little friction as possible between these components.

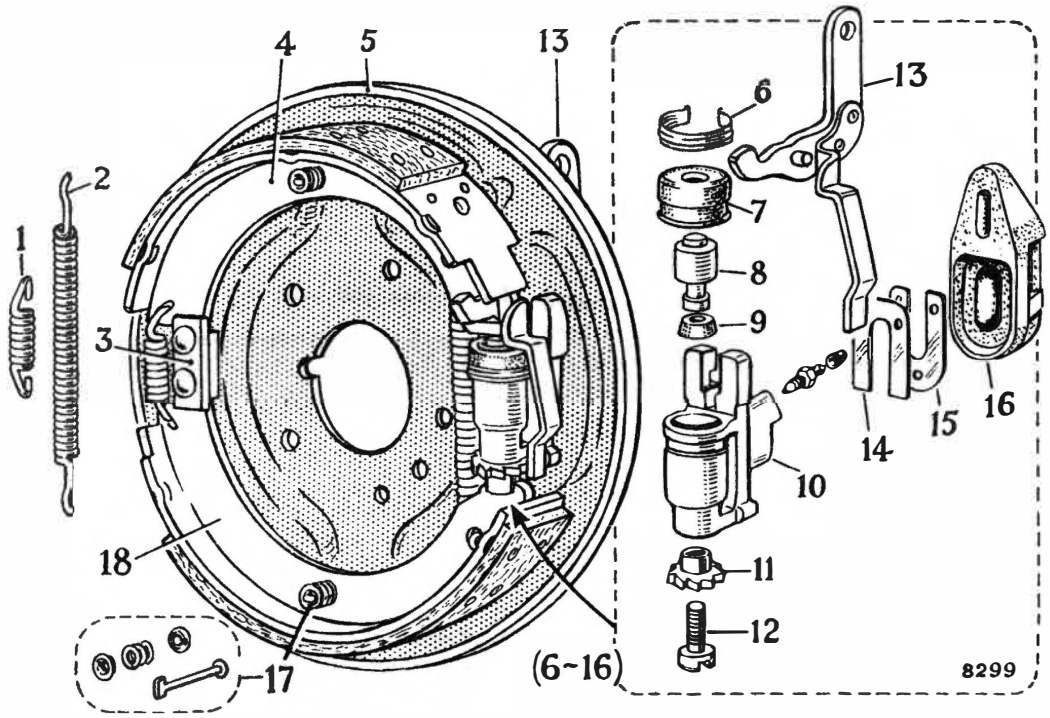

1. SHORT PULL-OFF SPRING
2. LONG PULL-OFF SPRING
3. FIXED ABUTMENT
4. LEADING BRAKE SHOE
5. BACK PLATE
6. CLIP
7. DUST COVER
8. PISTON
9. TAPERED SEAL
10. WHEEL CYLINDER BODY
11. ADJUSTER WHEEL
12. TAPPET
13. LEVER AND EXTENSION
14. SPRING PLATE
15. RETAINER PLATE
16. DUST COVER
17. STEADY POST
18. TRAILING BRAKE

Fig. 2. *Exploded view of left-hand rear brake back plate assembly*

(v) When fitting new brake shoes also fit new pull-off springs, the long spring is fitted between the back plate and the brake shoe webs.

(vi) Centralise the brake shoes on the back plate and rotate the adjuster wheel in the appropriate direction; the right-hand adjuster wheel has a right-hand thread while the left-hand adjuster wheel has a left-hand thread, to expand the brake shoes until there is just sufficient clearance to enable the brake drum to be fitted; this will minimise the initial adjustment.

(vii) Clean all dust from inside the brake drum and examine it for score marks, when the brake drum is badly scored it must be renewed.

(viii) Adjust the rear brakes by applying the hand-brake a number of times.

(ix) Do not expect full braking power until the brake shoes have bedded into the brake drums.

BRAKE ADJUSTING MECHANISM (Fig. 3)

The brake adjusting mechanism is incorporated in the wheel cylinder and actuated by an extension attached to the wheel cylinder lever; it consists of the following:—

(i) A tappet and adjuster wheel, freely mounted in the wheel cylinder body at the opposite end to the piston, ratchet type teeth are machined on the outer edge of the adjuster wheel.

(ii) A metal extension is attached to the wheel cylinder lever, the tip of which forms a pawl and rests on the peak of one adjuster wheel tooth.

(iii) A torsion type return spring mounted on a bracket welded to the outer face of the back plate, returns the wheel cylinder lever to the rest position.

When there is no lining wear and the handbrake is applied, the wheel cylinder piston will move the leading brake shoe into contact with the brake drum and the wheel cylinder body sliding in its slot will move the trailing brake shoe into contact with the brake drum.

Simultaneously with this movement, the tip of the wheel cylinder lever extension moves along the inclined face of the adjuster wheel ratchet teeth but without rotating it.

As lining wear takes place, the movement of the wheel cylinder lever and extension increases and its tip will rotate the adjuster wheel and extend the tappet to cancel out the lining wear.

On releasing the handbrake, the wheel cylinder lever will be returned to its rest position by the torsion spring and the extension will adopt its normal position on the peak of one ratchet tooth.

Initial adjustment

Periodical adjustment is unnecessary but adjustment will be required after any brake shoes have been refitted.

1. Apply the handbrake unhurriedly a number of times, to prevent unnecessary wear on the pawl and ratchet mechanism in the handbrake lever, the button on top of the lever can be depressed during the whole operation.
2. Stop when the handbrake lever reaches a constant height.

WHEEL CYLINDERS

The wheel cylinder consists of an alloy body, housing a piston and tapered seal which are protected by a rubber dust cover retained by a metal clip.

The wheel cylinder body adjacent to the head of the piston is built up to form a pivot for the lever of the handbrake. The longer and outer end of this lever is attached to the handbrake cable or brake rod while the short end locates an aperature in the toe end of the leading brake shoe web.

A tappet and adjuster wheel is fitted to the opposite end of the wheel cylinder body and with an extension on the wheel cylinder lever forms the self-adjusting mechanism.

The wheel cylinder is a sliding fit in the back plate thus facilitating centreing of the brake shoes. The wheel cylinder is located in its slot by spring and retaining plates fitted on to the neck of the wheel cylinder body as it protrudes through the back plate. The protruding portion of the wheel cylinder body contains two tappings, which accommodate the two pressure pipes or pressure pipe and bleed screw for right- and left-hand wheel cylinders respectively.

To remove and refit (Fig. 2)

1. Remove the brake shoes from the back plate, see under "Brake shoes—To remove and refit".
2. Detach the handbrake cable or rod from the wheel cylinder lever by withdrawing the spring clip from the clevis pin, removing the washers and clevis pin from the cable forkend or by discarding the split pin and releasing the spire clip on the outer end of the brake rod.
3. Withdraw the hydraulic pressure pipe(s) from the wheel cylinder by releasing the union nut(s) and remove the bleed screw as necessary, trapping any escaping fluid in a drip tray.
4. Remove the torsion spring from the wheel cylinder lever and backing plate bracket with a pair of pliers.
5. Remove the rubber dust cover, retainer and spring plates from the wheel cylinder lever and body; holding the wheel cylinder lever withdraw the wheel cylinder from the backplate slot, remove the wheel cylinder lever by moving it down into the back plate slot.
6. Identify the wheel cylinder left- or right-hand.
7. Refitting is the reverse of the removal sequence, but particular attention must be given to the following:—

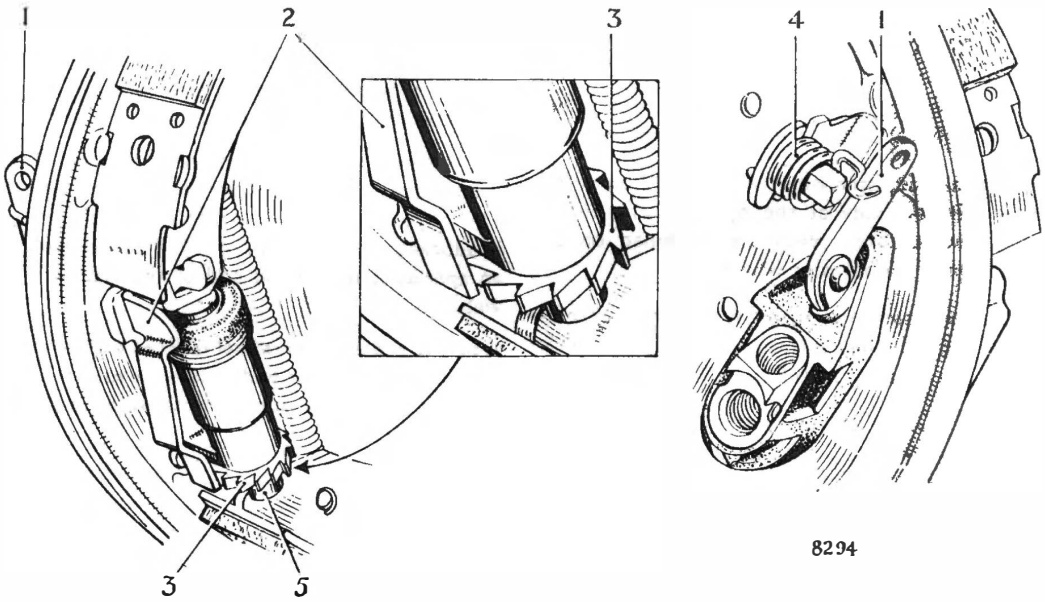

1. WHEEL CYLINDER LEVER
2. EXTENSION
3. ADJUSTER WHEEL
4. TORSION TYPE SPRING
5. TAPPET

Fig. 3. *Internal and external views of brake back plate showing self-adjusting wheel cylinder with an enlarged view of the wheel cylinder extension and adjuster wheel*

(i) Ensure that the wheel cylinder body has complete freedom of movement within the back plate slot, **this is important.**

(ii) Feed the wheel cylinder lever upward and into the back plate slot, feed the neck of the wheel cylinder body into the back plate slot and locate wheel cylinder lever pivot across the forked extension of the wheel cylinder body; fit the spring plate to the neck of the wheel cylinder body from the lever end, fit the retainer plate from the bottom end of the wheel cylinder neck and engage the pips of the spring plate.

(iii) Position the spring clip on the handbrake cable clevis pin towards the rear of the car or the spring clip above the brake rod and fit a new split pin.

(iv) Bleed the hydraulic system of air, see under "Bleeding the hydraulic system."

(v) Adjust the rear brakes, see under "Initial adjustment".

(vi) Check the handbrake adjustment, see under "Handbrake adjustment".

To dismantle and reassemble (Fig. 2)

1. Clean off all road dirt and when working on two or more wheel cylinders identify them, left or right-hand.
2. Withdraw the tappet and adjuster wheel from the wheel cylinder body by discarding the rubber band.
3. Remove the dust cover at the piston end by releasing the metal clip.
4. Eject the piston from the wheel cylinder body by applying low pressure air to the pressure pipe or bleed screw tappings.
5. Remove the tapered seal from the piston.
6. Reassembly is the reverse of the dismantling sequence, but particular attention must be given to the following:—
   (i) All parts must be meticulously clean and re-assembled in equally clean conditions.
   (ii) The tapered seal is fitted to the piston with a liberal coating of brake fluid and with the wider end of the taper away from the head of the piston.
   (iii) Smear the piston with Girling Red Rubber Grease and feed the piston and seal into the wheel cylinder body, exercising care not to damage the fine edge of the seal.
   (iv) Smear the inside edge of the dust cover with Girling Red Rubber Grease.
   (v) The adjuster wheel having the identification ring has a left-hand thread and with its tappet is fitted to the left-hand wheel cylinder; the plain adjuster wheel has a right-hand thread and with its tappet is fitted to the right-hand wheel cylinder.

BRAKE BACK PLATE

The brake back plate is a steel pressing suitable shaped to support the brake adjuster, steady posts, wheel cylinder and brake shoes. The back plate is mounted on the outer ends of the rear axle casing but cannot be removed without disconnecting the hydraulic system and removing the rear hub.

The left-hand back plate can be identified by the small cut-out in the axle casing aperture.

To remove and refit

1. Remove nave plate and slacken off the axle shaft nut.
2. Chock the front wheels, release the handbrake, jack up the rear of the car and remove the rear wheel.
3. Remove the brake drum and, when fitted, the distance piece from the hub by withdrawing the countersunk screw.
4. Detach the handbrake cable or rod from the wheel cylinder lever by withdrawing the spring clip from the clevis pin, removing the plain and spring washers and clevis pin from the cable forkend or by discarding the split pin and releasing the spring clip.
5. Disconnect the pressure pipe(s) from the wheel cylinder by releasing the union nut(s) and trapping any escaping fluid in a drip tray.
6. Remove the hub and key from the tapered end of the axle shaft by removing a nut and washer and fitting a suitable hub remover on the wheel studs, see under "Axle shaft—To remove and refit, Rear Axle, Section G".
7. Remove the back plate, oil catcher and sealing joints from the axle flange by withdrawing five nuts, washers and bolts; note the position and thickness of the sealing joints, see under "Axle shaft—To remove and refit, Rear Axle, Section G".
8. Refitting is the reverse of the removal sequence, but particular attention must be given to the following:—
   (i) Refit the sealing joints, one each side of the back plate as necessary, see under "Axle shaft—To remove and refit, Rear Axle, Section G".
   (ii) Position the head of the clevis pin above the handbrake cable forkend or the spring clip above the brake rod and fit a new split pin.
   (iii) Bleed the hydraulic system of air, see under "Bleeding the hydraulic system".
   (iv) Adjust the rear brakes, see under "Initial adjustment".
   (v) Check handbrake adjustment, see under "Hand-brake adjustment".

HYDRAULIC SYSTEM

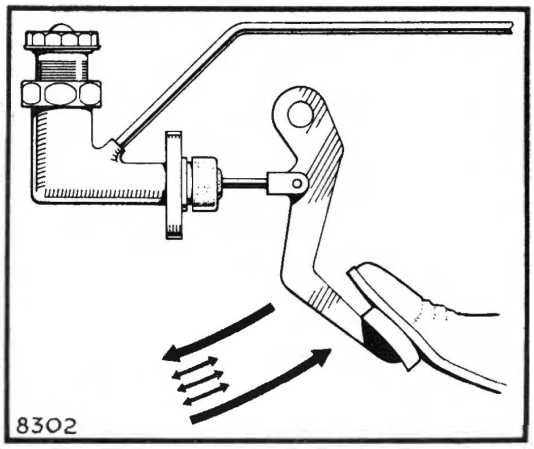

Fig. 4. *Indicating the long and short pedal strokes necessary to bleed the hydraulic system of air*

GENERAL

Great cleanliness is essential when dealing with any part of the hydraulic system and especially when the brake fluid is concerned. Dirty or aerated brake fluid must never be used in the hydraulic system, never use fluid which has been bled from the hydraulic system.

Use only the recommended type of brake fluid for topping up the master cylinder reservoir.

BLEEDING THE HYDRAULIC SYSTEM

Bleeding or expelling air from the hydraulic system is not a maintenance operation and will only be necessary when a portion of the hydraulic system has been disconnected or when the fluid level in the master cylinder reservoir has fallen so low that air has entered the system.

Always keep a careful check on the fluid level in the master cylinder reservoir during bleeding since it is most important that a high level of fluid is maintained. Should air enter the master cylinder from the reservoir, the complete operation must be repeated.

1. Destroy all vacuum in the servo unit by repeated operation of the brake pedal, otherwise difficulty will be experienced in completely expelling the air from the hydraulic system. **Do not** start the engine before bleeding the system has been completed.
2. Ensure that all hydraulic connections are secure and the master cylinder reservoir is filled with fluid which must be kept at a high level during the complete operation.
3. Remove the rubber cap from the bleed screw of the left-hand front caliper, fit the bleed tube and immerse the free end of the bleed tube in a glass vessel containing a small quantity of fluid.
4. Slacken off the bleed screw half to three-quarters of a turn and with an assistant depress the brake pedal a succession of long and short rapid strokes, i.e. the pedal depressed through its full stroke followed by two or three short rapid strokes and then allowed to fly back to the stop with the foot removed; any floor covering that prevents the full pedal stroke must be removed. Actuate the brake pedal in this manner until the fluid entering the glass vessel is free from air bubbles and then re-tighten the bleed screw on the next downward stroke of the brake pedal to the tightening torque given in the "General Data Section" (Fig. 4).
5. Remove the bleed tube and glass vessel from the bleed screw and refit the rubber cap.
6. Repeat the previous three operations with the right hand front caliper and finish with the wheel cylinder of the left-hand rear brake; the right-hand wheel cylinder has no bleed screw.
7. Top up the master cylinder reservoir to the correct level and refit the filler cap ensuring its seal is in good condition and its air vent is unobstructed, as an obstruction in the latter may cause pressure to build up and the brakes to bind.

Bleed screws

The calipers and wheel cylinder have conical ended bleed screws which bed on to a seat formed in the bottom of the bleed screw tapping in the body of that particular component.

The bleed screws must never be over-tightened since their threads may become stripped. Use only short spanners to tighten the bleed screws, the tightening torque is given in the "General Data Section".

Checking for leaks

1. Clean the connections, metal pipes and flexible hoses of all road dirt.

2. Start and run the engine when a vacuum servo unit is fitted.

3. Apply firm pressure to the brake pedal for a number of seconds while an assistant examines the connections, metal pipes and flexible hoses for leakage.

4. When leakage is observed at the connections, it may be necessary to dismantle the faulty connection to determine the cause, for tightening the bleed screw or union nut may only lead to stripped threads. Leaking metal pipes or flexible hoses must be renewed.

   After making any disconnections it will be necessary to bleed the hydraulic system of air, see under "Bleeding the hydraulic system".

BRAKE PIPE RUN

The pressure port of the master cylinder is connected by a metal pipe, which runs across the rear bulkhead, to the inlet port of the servo unit mounted in a rear corner of the engine compartment and the outlet port of the servo unit is connected by a second metal pipe to the top forward connection of the five-way connector mounted on the right-hand front wheel arch.

The centre connection of the five-way connector accommodates the stop light switch while the bottom forward and bottom rearward connections are connected by metal pipes and flexible hoses to the left- and right-hand front brake calipers respectively. The junctions of the metal pipes and flexible hoses, in addition to the metal pipe to the left-hand front brake caliper are supported in brackets and clips welded to the rear face of the front suspension crossmember.

The top rearward connection of the five-way connector is connected by a metal pipe, which passes through the wheel arch and runs rearward under the floor of the car to a flexible hose mounted in a bracket welded to the car floor.

The second end of the rear flexible hose is fitted in a support bracket welded on the rear axle casing which is connected by a short pipe to the lower tapping of the right-hand wheel cylinder. The upper tapping of this wheel cylinder is connected by a pipe which runs the width of the rear axle to the lower tapping of the left-hand wheel cylinder, the upper tapping accommodates the bleed screw.

The pressure pipes in the engine compartment, on the front suspension cross beam, under the floor and on the rear axle are attached by rubber sleeves and clips to absorb vibration which could result in possible fracture.

To provide the vacuum for servo assistance, the servo unit is connected to the engine inlet manifold by a flexible hose and a non-return valve.

Bending pressure pipes

The diameter of the pressure pipes is as follows:—

Pressure: From master cylinder to brake servo unit and from brake servo unit to calipers and wheel cylinders: $\frac{3}{16}$ in. diameter with $\frac{7}{16}$ in. 20 T.P.I. U.N.F. union nuts.

Should the pressure pipes be supplied in straight lengths, they must be shaped to follow the form of the original. In the event of the original being damaged beyond usefulness, a pattern must be made up from a length of heavy gauge malleable wire.

The new pipe length can easily be shaped with the fingers or on a pipe shaping "dolly" but in the absence of the latter, a piece of pipe similar in radius to the shape required can be used. To assist in forming the shape adjacent to the ends of the new length, a five-way connector can be screwed onto the union nut to provide a better grip.

Union nuts

The union nuts must never be overtightened since their threads may become stripped. Use only short spanners to tighten the union nuts, the tightening torque is given in the "General Data Section".

FLEXIBLE HOSES

To accommodate the constantly changing position of the front wheels and the rear axle whilst the car is moving, flexible hoses are used to connect the pressure pipes to the front calipers and the metal pipes mounted on the rear axle casing.

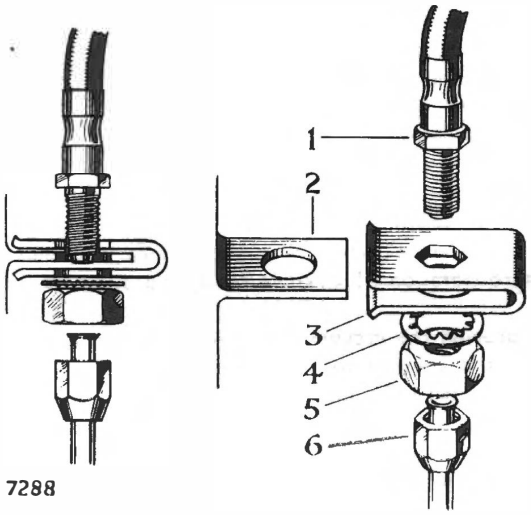

1. HOSE HEXAGON
2. SUPPORT BRACKET
3. LOCATING PLATE
4. WASHER
5. NUT
6. PRESSURE PIPE UNION NUT

Fig. 5. *Flexible hose connection. In some instances the locating plate (3) is omitted*

To remove and refit (Fig. 5)

1. Grip the hexagon of the flexible hose adjacent to the support bracket with a spanner, when a locating plate is fitted to the support bracket this spanner is unnecessary; detach the pressure pipe from the flexible hose by releasing the union nut and trapping any escaping fluid in a drip tray.

2. Still holding the hexagon of the flexible hose, withdraw the flexible hose from the support bracket by releasing the locknut and washer; when a locating plate is fitted, it is unnecessary to hold the flexible hose.

3. Remove the flexible hose and sealing washer from the brake caliper by applying a spanner to the hexagon at that end and permitting its entire length to rotate.

4. Refitting is the reverse of the removal sequence but particular attention must be given to the following:—

   (i) It is essential that the flexible hose is fitted to the brake caliper first and using a new sealing washer.

   (ii) Feed the end of the flexible hose into the support bracket, apply a spanner to the hexagon and set the run of the hose to clear all obstructions that could cause chafing. Secure the flexible hose to the support bracket with the washer and locknut and fit the pressure pipe to the protruding threaded end of the flexible hose with the union nut while holding the hexagon with the spanner to prevent the flexible hose from moving.

   When fitted, slide the locating plate onto the support bracket so the plain hole is on the pressure pipe side. Feed the end of the flexible hose into the locating plate and support bracket, locating the hexagon within the plate so the run of the flexible hose is clear of all obstructions that could cause chafing. Secure the flexible hose and fit the pressure pipe as described in the previous paragraph.

   (iii) Check that no chafing can occur under conditions of full bump and rebound by bouncing the body of the car up and down. In the instance of the front flexible hoses, position the front wheels on both full locks in addition to the straight ahead position.

   (iv) Bleed the hydraulic system of air, see under "Bleeding the hydraulic system".

MASTER CYLINDER RESERVOIR

Description

The master cylinder reservoir is fabricated from a translucent material and provides instant recognition of the fluid level without removing the filler cap.

The reservoir is screwed directly into the feed port in the end of the master cylinder. It is important to ensure that the filler cap seal is in good condition to prevent fluid leakage and the air vent holes are unobstructed for when these holes become obstructed pressure can build up in the hydraulic system and cause the brakes to bind.

To remove and refit

1. Unscrew the reservoir from the feed port in the front end of the master cylinder trapping the escaping fluid in a drip tray.

2. Refitting is the reverse of the removal sequence, but particular attention must be given to the following:—

   (i) The hydraulic system is bled of air, see under "Bleeding the hydraulic system".

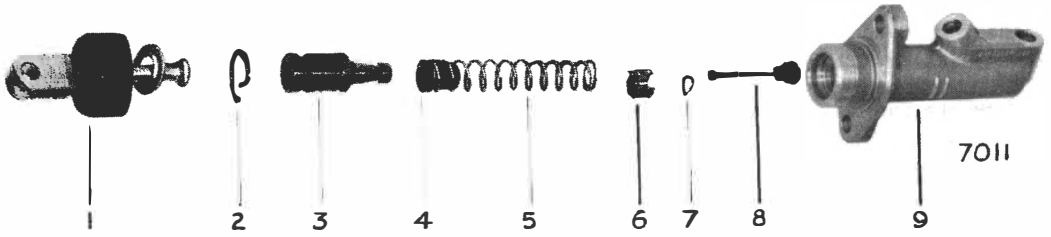

1. PUSH ROD
2. CIRCLIP
3. PISTON AND TAPERED SEAL
4. THIMBLE
5. PISTON RETURN SPRING
6. VALVE SPACER
7. SPRING WASHER
8. CENTRE VALVE AND SEAL
9. MASTER CYLINDER BODY

Fig. 6. *Exploded view of brake master cylinder*

MASTER CYLINDER

Description

The master cylinder is mounted inside the engine compartment on the rear bulkhead.

When pressure is applied to the brake pedal, the piston moves down the cylinder bore compressing the piston return spring against the centre valve and closes the seal over the feed port cutting off the supply of fluid from the master cylinder reservoir. Continued movement of the piston forces the fluid out of the pressure port through the servo unit to the front calipers and rear wheel cylinders and also keeps the centre valve hard on the feed port.

On the return stroke, the piston moves back along the cylinder bore and with the final movement of the piston lifts the centre valve off the feed port thus permitting the free flow of fluid between the master cylinder and its fluid reservoir.

To remove and refit

1. Destroy the vacuum in the servo unit by repeated operation of the brakes, otherwise difficulty will be experienced in completely expelling the air from the hydraulic system. DO NOT start the engine before bleeding the system has been completed.
2. Disconnect the pressure pipe from the master cylinder by releasing the union nut and trapping any escaping fluid in a drip tray.
3. Remove the pedal return spring cap from the master cylinder push rod by moving it forward away from the pedal lever and sliding the cap off the push rod.
4. Identify the position of the clevis pin in the pedal lever and detach the master cylinder push rod from the pedal lever by removing the spring clip, washer and withdrawing the clevis pin.
5. Remove the master cylinder and distance piece from the rear bulkhead inside the engine compartment by removing two nuts, washers and bolts which pass through the mounting flange and collect the pedal return spring from inside the car.
6. Refitting is the reverse of the removal sequence, but particular attention must be given to the following:—
   (i) The pedal lever has two push rod clevis pin holes and the push rod must be returned to its original position.
   (ii) The pedal lever is held rearwards, the pedal return spring is compressed while the spring cap is fed over the master cylinder push rod so its recessed face accommodates the forkend of the push rod.
   (iii) Bleed the hydraulic system of air, see under "Bleeding the hydraulic system".

To dismantle and reassemble (Fig. 6)

1. Ease the dust cover from the push rod end of the master cylinder body.

2. Withdraw the push rod assembly from the master cylinder body by releasing the circlip from the groove in the open end of the cylinder bore.

3. Eject the piston and centre valve assembly from the cylinder bore by applying low pressure air to the feed port in the end of the body.

4. Detach the centre valve assembly from the shouldered end of the piston by easing the leaf of the thimble upward clear of the piston shoulder.

5. Remove the thimble and piston return spring from the stem of the centre valve by compressing the return spring and passing the small end of the valve stem through the keyhole-shaped aperture in the thimble.

6. Withdraw the valve spacer and spring washer from the valve stem and ease the seal from the opposite side of the stem.

7. Ease the tapered seal from the shouldered end of the piston.

8. Reassembly is the reverse of the dismantling sequence but particular attention must be given to the following:—

   (i) All parts must be meticulously cleaned and reassembled under equally clean conditions.

   (ii) The seal is fitted to the centre valve, flat face first, with a liberal coating of brake fluid.

   (iii) The spring washer is fitted to the valve stem, domed face first, followed by the valve spacer so the "legs" encase the spring washer and seal.

   (iv) The piston return spring is fed onto the outside of the thimble and fitted to the valve stem, return spring first; the spring is compressed so the end of the valve stem can be locked in the keyhole-shaped aperture in the thimble, ensure that the piston return spring is located centrally on the valve spacer.

   (v) The tapered seal is fitted to the piston, flat face first and from the shouldered end of the piston with a liberal coating of brake fluid.

   (vi) The piston is fitted to the thimble, press the leaf downward so that the valve and piston assembly lock positively together.

   (vii) Smear the piston with Girling Red Rubber Grease and feed the centre valve and piston assembly into the cylinder bore, centre valve first, exercising care not to damage the fine edge of the seal and so the thimble leaf will be uppermost when the master cylinder is in its fitted position, thus the air between the piston and thimble will rise when the hydraulic system is bled of air.

   (viii) Smear the inside of the dust cover with Girling Red Rubber Grease and ensure that the circlip, which secures the push rod assembly, is fully engaged in its groove in the open end of the cylinder bore.

GIRLING SERVICE KITS

Girling Service Kits, containing the necessary seal(s) and a tube of Girling Red Rubber Grease, are available for all hydraulic units. The appropriate Service Kit must always be obtained when any seal(s) need renewing. Full instructions are included with the seal(s) but the following instructions should also be observed:—

1. When the hydraulic unit has been cleaned of road dirt and dismantled, the cylinder bore and internal parts must be cleaned with Girling Cleaning Fluid and allowed to dry off.

2. Examine the cylinder bore and piston(s); when the working surfaces are smooth to the touch, without corrosion, score marks or ridges, the new seal(s) can be fitted and the unit re-assembled. When there is any doubt as to the condition of the working surfaces, a new replacement hydraulic unit must be obtained.

3. All parts must be meticulously cleaned and re-assembled in equally clean conditions.

4. Fit the new seal(s) to the cylinder bore, piston or valve with a liberal coating of brake fluid giving particular attention to the position of the seal lip which is towards the pressure or feed supply of the fluid.

5. Smear the piston(s) with Girling Red Rubber Grease and insert into the cylinder bore, exercising care not to damage or fold back the fine edge of the seal(s).

6. Smear the inside of the dust cover(s) with Girling Red Rubber Grease, fit to the cylinder body and secure with the metal clip as necessary.

HANDBRAKE

DESCRIPTION

The handbrake operates on the rear wheels only and consists of a hand lever, situated between the driver's seat and the door, with a cable and rod linkage connecting the hand lever to the two levers, one included in each wheel cylinder. The handbrake is automatically adjusted as the rear brakes are adjusted.

The handbrake cable is nylon lined and requires no lubrication.

The rear end of the handbrake inner cable terminates at the lever of one wheel cylinder while the rear end of the outer casing terminates in a clip welded on a brake rod connected to the opposite wheel cylinder lever with the inner end of the rod steadied by a bracket welded to the differential cover of the rear axle.

The wheel cylinder lever attached to the inner cable moves as the handbrake is applied and the opposite wheel cylinder lever, attached to the brake rod, moves due to the reaction of the handbrake cable outer casing. The inner ends of the wheel cylinder levers locate in apertures formed in the webs of the leading brake shoes, thus movement of these levers causes the leading brake shoes to move outwards to the brake drums. Further movement of the wheel cylinder levers causes the wheel cylinder bodies to slide in the back plate slots and move the trailing brake shoes outwards to the brake drums.

HANDBRAKE LEVER

To remove and refit (Fig. 7)

1. Chock the front wheels and release the handbrake.
2. Tilt the driver's seat forward and remove the handbrake lever shield from the door sill by withdrawing three screws.
3. Remove the handbrake lever from the door sill by withdrawing two bolts, washers and distance pieces; detach the cable from the bottom of the lever by withdrawing the spring clip from the clevis pin, removing the washer and clevis pin from the forkend.
4. Refitting is the reverse of the removal sequence but particular attention must be given to the following:—

   The distance pieces are fitted between the handbrake lever and door sill.

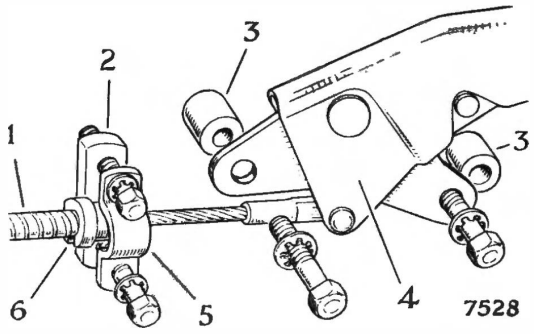

1. HANDBRAKE CABLE
2. DISTANCE PIECE
3. DISTANCE PIECE
4. HANDBRAKE LEVER
5. ABUTMENT CLIP
6. ABUTMENT BUSH

Fig. 7. *The handbrake lever; left-hand drive shown, right-hand drive symmetrically opposite*

HANDBRAKE CABLE

To remove and refit (Figs. 8 and 9)

1. Remove the handbrake lever from the door sill and cable, see under "Handbrake lever—To remove and refit".
2. Detach the handbrake cable from the door sill by withdrawing two bolts and washers from the abutment clip and distance piece, remove the abutment bush from the outer casing.
3. Withdraw the handbrake cable and floor grommet from beneath the car after removing the clip from the car frame by withdrawing a self-tapping screw.
4. Detach the handbrake cable from the wheel cylinder lever by withdrawing the spring clip from the clevis pin, removing the plain and spring washers and clevis pin from the forkend.
5. Remove the handbrake cable from the brake rod abutment by easing the rubber grommet from the end of the outer casing, then sliding the handbrake cable sideways and lifting the inner cable from the brake rod abutment.

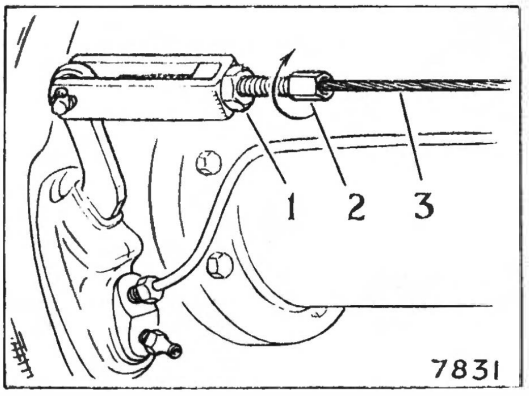

1. LOCKNUT
2. THREADED SLEEVE
3. INNER CABLE

Fig. 8

The handbrake cable adjuster; the arrow indicates the direction of rotation to shorten the cable. Right-hand drive shown, left-hand drive symmetrically opposite

6. Refitting is the reverse of the removal sequence but particular attention must be given to the following:—

   (i) The handbrake cable is fitted at the hand lever end first with the flange of the abutment bush away from the lever.

   (ii) Ensure that the rubber grommets are fitted to the floor and onto the rear end of the outer casing and the rubber sleeve under the frame clip.

   (iii) Position the spring clip of the handbrake cable clevis pin towards the rear of the car.

   (iv) When a replacement handbrake cable has been fitted, the handbrake operation is checked, see under "Handbrake—Adjustment".

HANDBRAKE ROD

To remove and refit

1. Chock the front wheels, release the handbrake and jack up the rear of the car.

2. Withdraw the brake rod from the wheel cylinder lever by discarding the split pin and releasing the spring clip.

3. Detach the rubber grommet from the end of the handbrake outer casing and move it along the inner cable.

4. Hold the brake cable outer casing with one hand, slide the brake rod abutment off the end of the outer casing and detach the brake rod from the inner cable through the slot in the abutment.

5. Withdraw the brake rod from the bearing inside the rear axle clip.

6. Remove the bearing from the rear axle clip when the hole has become elongated.

7. Refitting is the reverse of the removal sequence but particular attention must be given to the following:—

   (i) The spring clip is fed onto the brake rod so the double "prongs" point outward and when clipped over the wheel cylinder lever, the lever is between the short single "prong" and the double "prongs". Fit a new split pin.

   (ii) The rubber grommet is fitted over the end of the outer casing.

   (iii) When a replacement rod has been fitted, the handbrake operation is checked, see under "Handbrake adjustment".

Handbrake adjustment (Fig. 8)

Adjustment of the rear brakes will automatically adjust the handbrake and when the handbrake operation is correct there is four to six clicks of handbrake lever travel before the rear wheels are fully locked.

When, with the rear brakes correctly adjusted, excessive handbrake lever travel is experienced adjust the length of the handbrake cable as follows:—

1. Chock the front wheels, release the handbrake and jack up the rear of the car.

2. Remove the slackness from the handbrake cable by slackening off the locknut and rotating the threaded sleeve on the end of the handbrake cable clockwise, retighten the locknut.

3. Ensure that the brakes do not bind by rotating each rear wheel by hand.

4. Apply the handbrake, remove the jack and the chocks

BRAKE PEDAL ASSEMBLY

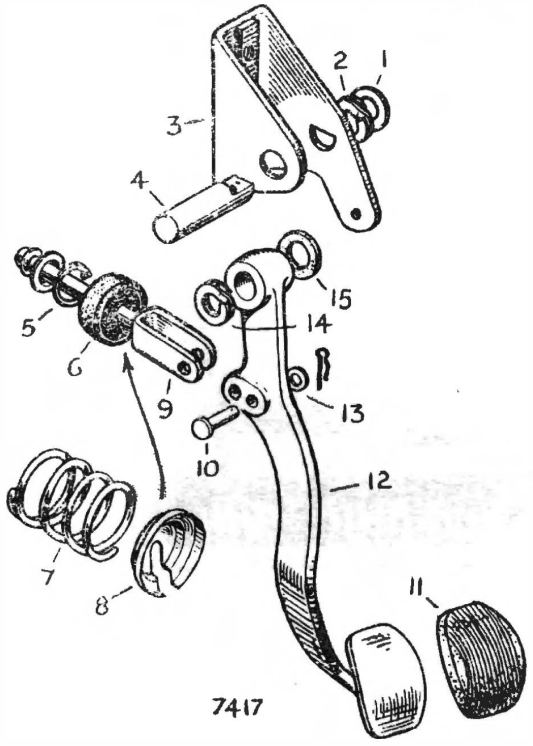

1. PLAIN WASHER
2. SPRING WASHER
3. PEDAL BRACKET
4. PEDAL SHAFT
5. CIRCLIP
6. RUBBER COVER
7. RETURN SPRING
8. CAP
9. PUSH ROD ASSEMBLY
10. CLEVIS PIN
11. PEDAL PAD
12. FOOT PEDAL
13. PLAIN WASHER
14. SPRING WASHER
15. FELT WASHER

Fig. 9. *The pedal assembly*

DESCRIPTION

The pedal assembly is of the pendulum type mounted in an individual bracket attached to the bulkhead inside the car. The master cylinder push rod can be attached to one or the other of the two holes in the pedal lever and this will affect the position of the pedal pad by approximately 1½ in. (4 cm.). The pedal return spring is mounted on the master cylinder push rod between the pedal lever and the bulkhead while the pedal stop is incorporated in the master cylinder.

To remove and refit

1. Identify the position of the clevis pin in the pedal lever and detach the master cylinder push rod from the pedal lever by withdrawing the spring clip from the clevis pin, removing the washer and clevis pin from the forkend.
2. Remove the pedal assembly from inside the car by removing the bolt and washer from the top of the bulkhead inside the engine compartment above the top master cylinder attachment and the top master cylinder nut, washer and bolt.
3. Refitting is the reverse of the removal sequence but particular attention must be given to the following:—
   (i) The pedal lever has two push rod clevis pin holes and the push rod must be returned to its original position.

To dismantle and reassemble (Fig. 9)

1. Withdraw the felt and spring washers from inside the pedal bracket by discarding the split pin and ejecting the pedal shaft and collecting the plain and spring washers from the "D"-shaped end of the shaft.
2. Remove the rubber pad from the pedal when it is seen to be well worn.
3. Reassembly is the reverse of the dismantling sequence but particular attention must be given to the following:—
   (i) The rubber pad is affixed to the pedal lever with a suitable adhesive.
   (ii) The spring and felt washers are positioned one each side of the pedal lever within the bracket.
   (iii) The pedal shaft is fed into the bracket and pedal lever "D"-shaped end first, so the flat on the shaft aligns with the flat in the opposite end of the bracket, to its fullest extent, the spring and plain washers fitted to the "D"-shaped end, use a new split pin.

GIRLING VACUUM SERVO UNIT

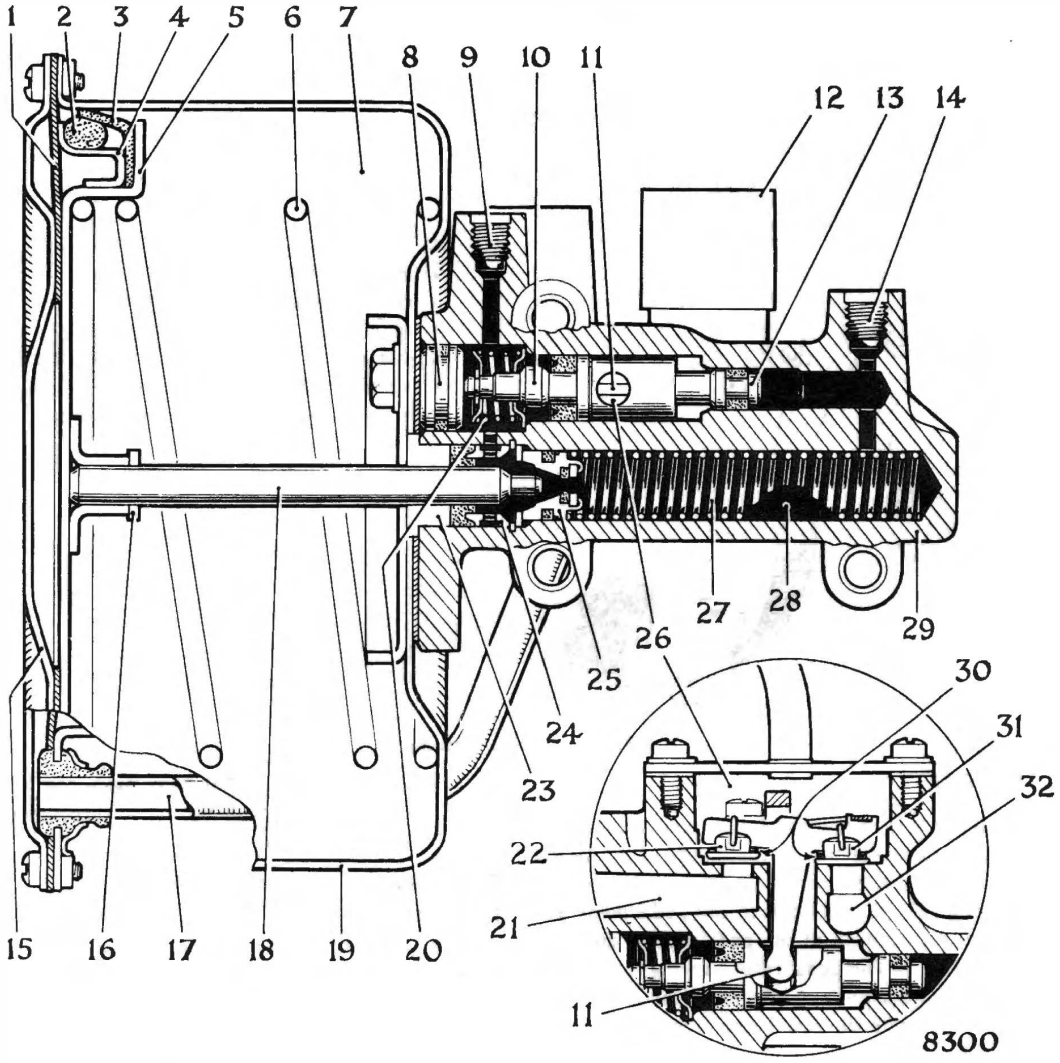

1. END COVER GASKET
2. PISTON BACKING RING
3. PISTON SEAL
4. PISTON SEAL RETAINER
5. PISTON
6. PISTON RETURN SPRING
7. CONSTANT VACUUM
8. END PLUG
9. HYDRAULIC INLET PORT
10. VALVE CONTROL PISTON, LOW PRESSURE END
11. "T" SHAPED LEVER
12. AIR FILTER ASSEMBLY
13. VALVE CONTROL PISTON, HIGH PRESSURE END
14. HYDRAULIC OUTLET PORT
15. END COVER
16. PISTON BUFFER
17. TRANSFER TUBE
18. PISTON ROD
19. VACUUM CYLINDER
20. CONTROL PISTON SPRING
21. VACUUM INLET
22. VACUUM VALVE
23. BEARING BUSH
24. NYLON SPACER
25. OUTPUT PISTON
26. VALVE CHEST
27. OUTPUT PISTON SPRING
28. OUTPUT CYLINDER
29. CAST BODY
30. VALVE SPRINGS
31. AIR VALVE
32. AIR INLET

Fig. 10. *Cross section view of Girling Vacuum Servo Unit*

GIRLING VACUUM SERVO UNIT

DESCRIPTION

The Girling Vacuum Servo Unit is installed in the brake hydraulic system between the master cylinder and the brake assemblies on the road wheels with the master cylinder pressure pipe connected to the vacuum servo unit and the servo hydraulic outlet is connected to the brake assemblies. The force required to augment the driver's effort is obtained by admitting atmospheric pressure to a vacuum cylinder containing a piston.

The pressure difference thus created across the piston produces a thrust load which is used to increase the hydraulic pressure available at the brake assemblies.

In the Girling Vacuum Servo Unit, the piston in the vacuum cylinder is normally subjected to vacuum on both sides and this principle is known as "Suspended Vacuum System". The vacuum is obtained from the inlet manifold of the engine and therefore servo assistance is only available while the engine is running.

Between the engine inlet manifold and the vacuum servo unit is a non-return valve which prevents air or petrol fumes entering the servo unit.

OPERATION (Fig. 10)

When air, at atmospheric pressure, is admitted to the vacuum cylinder (19) by a composite control valve the piston (5) drives the piston rod (18) and the output piston (25) down the hydraulic output cylinder (28) pro-providing a considerable increase of hydraulic pressure to the brake assemblies on the road wheels.

The control valve, operated by hydraulic pressure from the master cylinder, exercises a precise control over the pressure increase and the brakes are applied exactly in proportion to the pressure applied to the foot pedal.

When the servo unit is at rest with no pressure in the hydraulic system, the vacuum valve (22) of the control valve is open and permits vacuum from the inlet manifold to temporarily communicate with the end cover side of the piston (5) in the vacuum cylinder (19) thus vacuum on both sides of the piston (5) is equal.

When pressure is applied to the brake pedal, hydraulic pressure is exerted throughout the braking system and equally on both ends of the valve control piston (10 and 13). As one end of this control piston is larger than the other, an equal pressure per square inch on both its ends causes a proportionally greater thrust to be exerted on the larger end moving the control piston and results in the "Tee"-shaped lever (11) opening the air valve (31) to the atmosphere and closing the vacuum valve (22).

Air is admitted to the end cover side of the piston (5) destroying the temporary vacuum, driving the piston (5) forward.

The piston rod (18) seals the centre hole in the output piston (25) and continued movement applies additional pressure to the hydraulic pressure proceeding to the brake assemblies and also to the small end of the valve control piston (13).

The movement of the output piston (25) continues until the thrust on the small end of the valve control piston (13) by the higher pressure to the brake assemblies, overcomes the thrust on the large end of the control piston (10), by the lower pressure from the master cylinder. The valve control piston (10 and 13) is thus moved back and closes the air valve (31); at this point both valves are closed and the brakes held on.

When the brake pedal is released the lower pressure from the master cylinder is reduced at the large end of the valve control piston (10) which moves back towards its rest position causing the "Tee"-shaped lever (11) to open the vacuum valve (22) drawing the air from the end cover side of the piston (5) in the vacuum cylinder (19), the piston (5) returns to its rest position and with it the output piston (25) relieving the hydraulic pressure in the brake assemblies. The piston rod (18) is withdrawn from the centre hole in the output piston (25) allowing a flow of hydraulic fluid between the brake assemblies and the fluid reservoir of the master cylinder.

If the brake pedal pressure was increased instead of being decreased the control valve operates to give additional assistance until the thrust on each end of the valve control piston is balanced or until the limit of available vacuum is reached. Conversely, if the pedal pressure is only reduced, the control valve operates to reduce the hydraulic pressure in the brake assemblies until, again, a state of balance of the valve control piston is reached.

SERVICING

Whenever possible the Girling Vacuum Servo Unit should be returned to the manufacturers for replacement but if this is not possible the renewing of all seals as contained in the Service Kit should provide a satisfactory unit providing **the internal working surfaces are in good condition.**

There should be no sign of corrosion, pitting, scoring or steps on the piston rod, pistons or bores and the surfaces should be smooth to the touch.

When dismantling, absolute cleanliness is essential. Wash the hands and lay out a clean sheet of paper on which to work and place the parts. Take care of all highly finished working surfaces on pistons, rods and bores. Clean hydraulic parts with Girling Cleaning Fluid or Commercial Methyl Alcohol and do not allow any other fluid, oil or grease to touch them. Special care should be exercised when removing or refitting the circlip in the hydraulic output cylinder and when reassembling the vacuum cylinder to the body.

To remove and refit

1. Remove the flexible vacuum hose from the top of the servo unit by withdrawing the banjo bolt and collecting two sealing washers.
2. Detach the two pressure pipes from the servo unit by releasing the union nuts and trapping any escaping fluid in a drip tray.
3. Detach the band round the vacuum cylinder from the bracket by removing a nut, washer and bolt.
4. Remove the servo unit from the mounting bracket by withdrawing three bolts and washers. No useful puspose is served by removing the brackets.
5. Refitting is the reverse of the removal sequence but particular attention must be given to the following:—
   (i) Check that the two brackets are secure.
   (ii) The vacuum pipe is secured with a new sealing washer each side of the banjo connection.
   (iii) The hydraulic system is bled of air, see under "Bleeding the hydraulic system" before the engine is started.

To dismantle and reassemble

1. Grip the servo unit in a vice by the two lower lugs on the cast body.
2. Remove the piston assembly (5) spring (6) gasket (1) and end cover (15) from the vacuum cylinder (19) by removing the transfer pipe retaining plate and seven nuts and bolts while controlling the pressure of the spring (6).
3. Remove the vacuum cylinder (19) and gasket from the cast body (29) by withdrawing three bolts, washers and a clamping plate and easing the grommet in the flange of the cylinder from the transfer pipe (17).
4. Remove the cover and transfer pipe (17) from the valve chest (26) by withdrawing four screws and washers.
5. Remove the valve retainer and flat horseshoe spring from inside the valve chest (26) by withdrawing two screws.
6. Withdraw the valves (22 and 31) and "Tee"-shaped lever (11) complete from inside the valve chest (26) by applying light pressure to the plug (8) in the end of the control piston bore.
7. Remove the cast body (29) from the vice and withdraw the control piston assembly from the top bore by tapping the mounting flange of the cast body on a wooden block.
8. Dismantle the control piston assembly by compressing the piston spring, easing off the circlip and removing the spring and retainers.
9. Remove the two seals from the control piston and one from the plug (8).
10. Withdraw the piston rod bearing bush (23) from the output piston bore and using a hooked tool remove the gland seal beneath followed by the nylon spacer (24).
11. Mount the cast body vertically in the vice by one of the mounting lugs and fit the compression tool to press the output piston (25) into the bore.
12. Using circlip pliers fully compress the circlip in the bore and carefully lift out the circlip exercising great care not to damage the bore, otherwise a brake failure may result.
13. Release the compression tool when the piston spring (27) will push out the washer followed by the output piston (25) the latter is then discarded.

14. Reassembly is the reverse of the dismantling sequence but particular attention must be given to the following:—

(i) All seals must be renewed and lubricated with Girling Brake Fluid; lubricate the bores and pistons with Girling Red Rubber Grease.

(ii) Fit a new output piston (25) as the piston rod seal can only be fitted during manufacture and confirm that the taper seal has the larger diameter nearer the reduced end of the piston.

(iii) Fit the spring (27) to the output piston (25) feed both into the bore, spring first, followed by the washer and hold in position with the compression tool and clip the tool under the mounting flange of the cast body (29).

(iv) Ensure that the circlip does not foul the side of the cylinder and fits snugly into its groove; this operation must be unhurried and the circlip pliers must be secure in the circlip, for any damage to the cylinder can result in brake failure. Remove the compression tool from the cast body.

(v) Fit the nylon spacer (25) into the bore, large end first, followed by the gland seal, lip end first, and finally fit the bearing bush (23).

(vi) Fit the control piston to the bore so the transverse hole aligns with the hole in the valve chest (26).

(vii) It is unlikely that the two nylon valves (22 and 31) will need renewing but when it is necessary their faces should be lapped on a piece of glass with a fine lapping paste to ensure they are airtight.

Fit the valves (22 and 31) and "Tee"-shaped lever (11) complete so the horsehoe spring location above the air valve (31) is away from the two securing screws inside the valve chest (26). It will be necessary to compress the end plug (8) to locate the end of the "Tee"-shaped lever (11) in the control position.

(viii) Fit a new rubber grommet in the flange of the vacuum cylinder (19) and locate a new gasket on the mounting face of the cast body (29).

(ix) Fit the vacuum cylinder (19) and clamping plate with the centre hole of the cylinder over the protruding bearing bush (23) and transfer pipe (17) ensuring there will be space over the grommet for the passage of air when the end cover (15) is fitted but leave the three bolts slack.

(x) Position the piston (5) and return spring (6) inside the vacuum cylinder (19) and push it down through the full stroke several times to align the bearing bush (23); remove the piston (5) and return spring (6) and tighten the three cylinder attachment bolts taking care not to displace the vacuum cylinder (19) on the flange of the cast body (29). If the cylinder is displaced it can cause the brakes to "hang-on".

(xi) Remove the sponge rubber backing ring (2) from the piston flange and fit the new one from the service kit. Smear the special lubricant, supplied with the kit, on the leather seal (3) of the piston (5).

(xii) Smear the piston rod (18) with Girling Red Rubber Grease and with the return spring in front offer up the assembly to the vacuum cylinder (19).

(xiii) Position the end cover (15) with a new gasket (1) on top of the piston (5) and press down, taking care the piston rod (18) enters the bearing bush (23) without damage.

(xiv) Secure the end cover (15) with the nuts and screws.

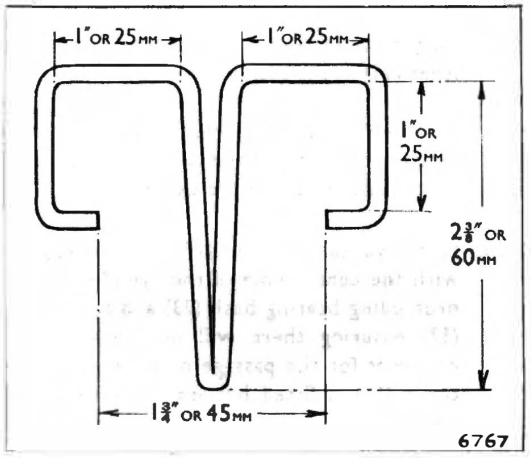

Fig. 11. *The compression tool*

COMPRESSION TOOL (Fig. 11)

The compression tool, necessary to compress the output piston, is made from a 12 in. (30 cm.) length of ⅛ in. (3 mm.) diameter iron wire.

Bend the wire back on itself in the centre to make the middle "leg" of the tool. Follow with the six other bends as shown in the illustration, finally cutting the two ends so there is 1¾ in. (45 mm.) between them.

The centre "leg" is inserted into the output cylinder bore and pressed down until the two ends can be sprung apart and clipped under the mounting flange of the cast body. The tool is then pushed aside towards the control cylinder bore to allow room to insert the circlip pliers.

TESTING EQUIPMENT

To make comprehensive tests, of the vacuum servo unit, requires complex and expensive equipment and this kind of testing is outside the capacity of many Service Workshops. A number of simple tests can be made when the servo unit is installed which gives some useful information and these tests are described hereafter. The only piece of equipment required is a ⅜ in. ×24 U.N.F. pipe union to fit into the hydraulic inlet port.

The use of these tests will assist in diagnoses and will provide assurance after servicing, but the tests are not exhaustive and so cannot equal the standard of the testing which is done in the factory by the specially designed equipment. When a vacuum servo unit gives cause for doubt it is always best to replace it with a factory tested unit whenever possible.

It is assumed that any faults connected with the brake system, such as fluid contamination, lack of adjustment, air in the hydraulic system, fluid leaks, etc., have been recognised and eliminated.

Test 1

1. Fit the servo unit to the mounting bracket and before connecting the air or fluid pipes, fit a bleed screw to the fluid outlet port and the special adaptor to the fluid inlet port.
2. Connect the vacuum pipe from the engine inlet manifold to the adaptor and remove the air filter element.
3. Start the engine and while "ticking over" place the fingers over the air inlet port of the air filter and the vacuum port to determine if there is any suction at either orifice, no suction should be experienced.
4. When suction can be detected, it indicates that the bores are scored or the components incorrectly assembled.
5. Remove the adaptor.

Test 2

1. Connect the vacuum pipe from the inlet manifold to the vacuum port.
2. Connect the fluid inlet and outlet pipes to their respective ports and bleed the hydraulic system of air.
3. Start and run the engine. While the brake is being applied, it should be possible to hear the hiss of the air inlet and with the hand on the vacuum cylinder feel the movement of the piston inside the vacuum cylinder.

Test 3

1. Start and run the engine for half a minute then switch off and leave for two minutes.
2. Apply the brake and the servo unit should operate and the operation should be detected as described in Test 2.

Test 4

Start and run the engine, apply the brake hard and hold it on for fifteen to twenty seconds. There should be no perceptible creep in the brake pedal.

If there is any creep, it indicates leaks or scored bores in the components.

Test 5

1. Jack up the front road wheels.
2. Start and run the engine.
3. Apply the brake and release.
4. The front road wheels should be free to move half a second after the release of the pedal.

Tests 2 to 5 can be used to test a suspect Vacuum Servo Unit before it is removed from the car.

IF THE RESULT IS UNSATISFACTORY ON:—

Test 2. It means the servo unit is not working at all, which could be caused by a lack of vacuum, possibly a faulty non-return valve, or a fault within the servo unit.

Test 3. It indicates leaking gaskets, air valve or rubber grommet. Clamp the vacuum hose and repeat Test 3. If satisfactory, the non-return valve is faulty. To test for a leaking air valve run the engine and place the finger over the air inlet. If the suction is only slight the air valve is satisfactory and the leak is elsewhere.

Test 4. The source of the trouble can only be found by elimination. Check for leaks. If no leak of hydraulic fluid is evident clamp each hose successively and repeat the test each time. Finally plug the master cylinder outlet and test. If creeping of the pedal is evident when the hoses are clamped and the pedal is solid when the master cylinder outlet is plugged, the servo unit is faulty.

Test 5. If the brakes remain on, disconnect the vacuum pipe, operate the brakes to eliminate all the vacuum in the servo unit and repeat the test. If the brakes remain on, the fault is not in the servo unit. If the brakes now release normally, the fault is in the servo unit and the alignment of the piston in the vacuum cylinder is suspect.

VACUUM NON-RETURN VALVE

A vacuum non-return valve is included in the banjo connection situated on top of the servo unit. Since it is not possible to dismantle the non-return valve, in the event of failure it must be renewed.

Its purpose is to preserve the vacuum in the servo unit and to prevent damage to it in the event of an engine backfire.

It consists of a spring-loaded valve which, in normal conditions, will be open due to the vacuum from the engine inlet manifold. When the vacuum from the inlet manifold becomes insufficient to preserve the vacuum in the servo unit, the spring-loaded valve will return to its seat.

To remove and refit

1. Remove the banjo connection and two copper washers from the top of the servo unit by withdrawing the banjo bolt.
2. Withdraw the banjo connection from the flexible hose by slackening off the hose clip.
3. Refitting is the reverse of the removal sequence but particular attention must be given to the following:—
   (i) The two copper washers, one each side of the banjo connection are not omitted.

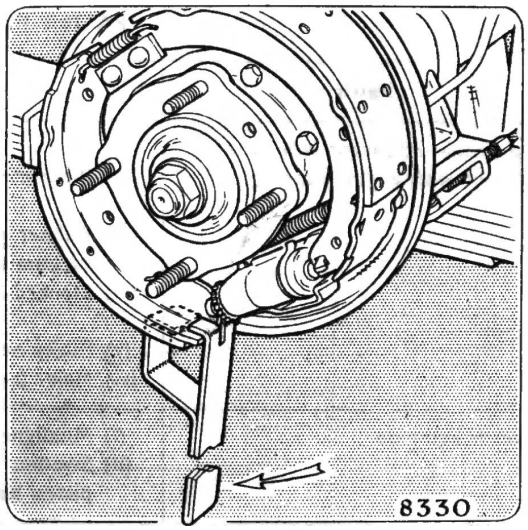

Fig. 12. *The Girling shoe horn applied to the toe end of the trailing brake shoe*

GIRLING SHOE HORN (Fig. 12)

The shoe horn, for the removal and refitting of the brake shoes, is marketed by Messrs. Girling Limited under Part number 64947013.

The shoe horn is applied to the toe end of the trailing brake shoe and levered forward as shown in the illustration to disengage or engage the brake shoe web in the slot of the tappet.

FAULT FINDING CHART

Fault	Cause	Action
Hard pedal—Apparent lack of servo assistance with engine running	(i) Lack of vacuum	(i) Check vacuum connections
	(ii) Restricted hose	(ii) Check hose and renew if necessary
	(iii) Rubber grommet in flange of vacuum cylinder	(iii) Fit new parts from Service Kit
	(iv) Blocked air filter	(iv) Examine air filter element and renew if necessary
	(v) Faulty output piston	(v) Fit new parts from Service Kit
	(vi) Major fault in servo unit	(vi) Fit new servo unit
Brakes hanging on	(i) Misaligned vacuum piston	(i) Check as Test No. 5
	(ii) Swollen rubber grommet or piston backing ring	(ii) Fit new parts from Service Kit
Slow action of servo unit	(i) Swollen rubber grommet in flange of vacuum cylinder	(i) Fit new parts from Service Kit
	(ii) Blocked filter or restricted air inlet	(ii) Examine air filter element and renew as necessary
Lack of servo assistance on heavy braking	Leak in servo vacuum	Check for leaks
Loss of fluid	(i) Failure of seal or seals	(i) Fit new parts from Service Kit
	(ii) Scored bore	(ii) Fit new servo unit

MANUALLY ADJUSTED REAR BRAKES

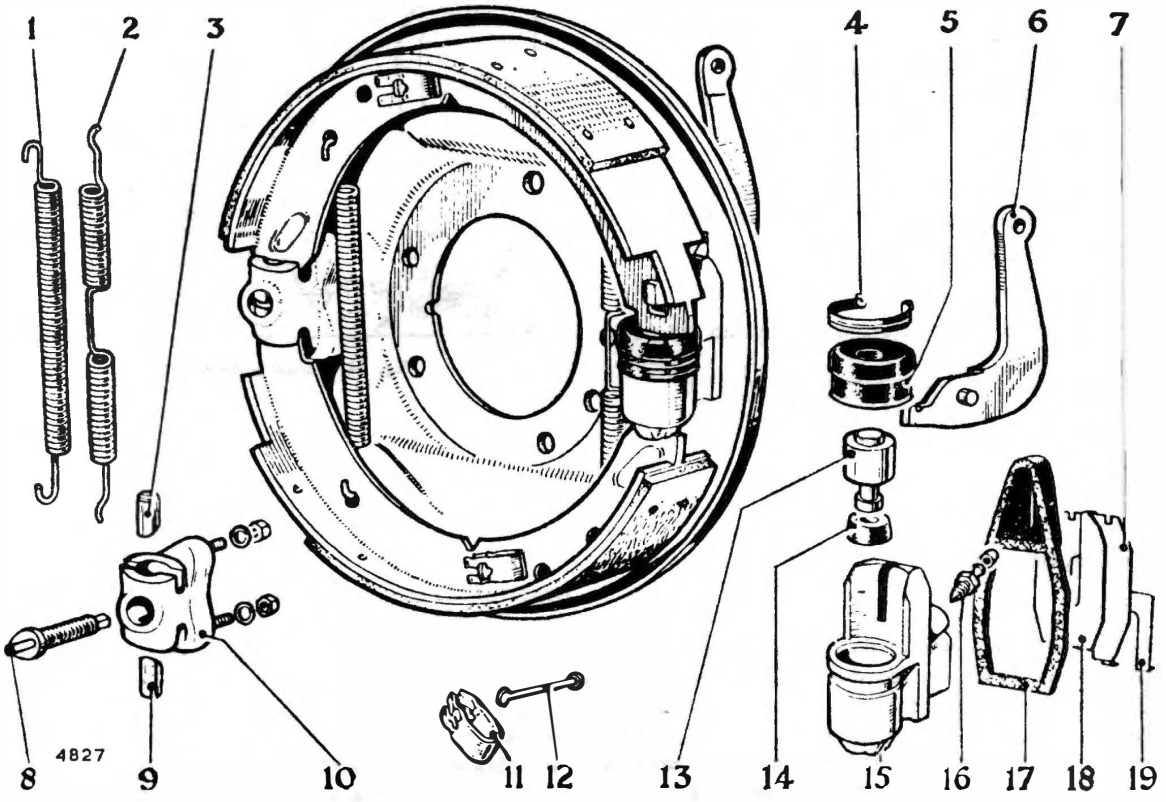

1. RETURN SPRING
2. RETURN SPRING
3. ADJUSTER LINK
4. DUST COVER CLIP
5. DUST COVER
6. HANDBRAKE LEVER
7. RETAINING PLATE
8. WEDGE
9. ADJUSTER LINK
10. ADJUSTER HOUSING
11. LEAF SPRING
12. PEG
13. PISTON
14. SEAL
15. CYLINDER BODY
16. BLEED SCREW
17. DUST COVER
18. SPRING PLATE
19. DISTANCE PIECE

Fig. 13. *Manually adjusted rear brake assembly*

Description

The difference between manually adjusted rear brakes and automatic adjusting rear brakes is in the wheel cylinder assemblies and the adjuster housing which replaces the fixed abutment in the automatic brake. Compare Fig. 13 with Fig. 2 of K2 which shows the automatic adjusting rear brake.

To remove and refit

The manually adjusted rear brake assembly is very similar to the automatic in this respect, see under K2 "Rear drum brakes—To remove and refit", but attention is drawn to the following differences:—

1. The steady post cap of the automatic assembly is replaced by a leaf spring, and removal is similar, depress the spring and turn the post.

2. When the lower brake shoe is removed it is possible that the lower adjuster link may drop out of the housing; this should be retained for reassembly.

3. If required, the adjuster housing may be removed from the backplate; it is retained by two washers and nuts.

After reassembly, brake adjustment is by the procedure outlined below.

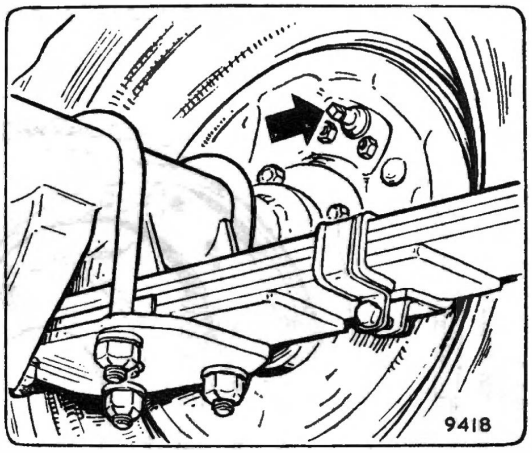

Fig. 14. *Manual brake adjuster*

Brake adjustment

Chock front wheels, release the handbrake and jack up rear wheels. Locate the adjuster at the front inboard face of the backplate (see Fig. 14) and turn adjuster clockwise to lock the shoes up to the drum, i.e. until resistance is felt. Slacken the adjuster until the wheel is free to rotate (usually two clicks) under light hand pressure

Spin the wheel and apply the brakes hard to centralise the shoes in the drum and recheck the adjustment, by the above procedure.

Repeat at the other rear wheel.

Normally, adjustment of the rear brakes will automatically adjust the handbrake, which when correct allows 4 to 6 notches of handbrake movement before the wheels are locked. If handbrake adjustment is not correct, see "Handbrake adjustment", but remember that with manually adjusted rear brakes the brake shoes should be locked up for the actual cable adjustment.

BRAKES

SECTION K2

CONTENTS

	Page
ADJUSTMENTS ...	K2— 3
—Front brakes	K2— 3
—Handbrake ...	K2—20
—Initial adjustment	K2—11
—Rear brakes ...	K2— 3
BACK PLATE ...	K2—13
—To remove and refit	K2—13
BLEEDING THE HYDRAULIC SYSTEM	K2—14
—Bleed screws	K2—14
—Checking for leaks ...	K2—15
BRAKE ADJUSTING MECHANISM	K2—11
—Initial adjustment	K2—11
BRAKE PADS ...	K2— 6
—To examine for wear	K2— 7
—To remove and refit	K2— 7
BRAKE PEDAL ASSEMBLY ...	K2—21
—To remove and refit	K2—21
—To dismantle and reassemble	K2—21
BRAKE PIPE RUN ...	K2—15
—Bending metal pipes	K2—15
—Union nuts ...	K2—15
BRAKE SHOES ...	K2— 9
—To examine for wear	K2— 9
—To remove and refit	K2— 9
CALIPERS ...	K2— 7
—To remove and refit	K2— 7
—To dismantle and reassemble	K2— 7
DISCS ...	K2— 8
—Run-out	K2— 8
—To check	K2— 8
—To remove and refit	K2— 8
FAULT FINDING CHART ...	K2—28
FLEXIBLE HOSES ...	K2—15
—To remove and refit	K2—16
FRONT DISC BRAKES ...	K2— 6

	Page
GENERAL DESCRIPTION	K2— 3
GIRLING SERVICE KITS	K2—18
HANDBRAKE	K2—19
—Handbrake adjustment	K2—20
HANDBRAKE CABLE	K2—19
—To remove and refit	K2—19
HANDBRAKE LEVER	K2—19
—To remove and refit	K2—19
HANDBRAKE ROD	K2—20
—To remove and refit	K2—20
HYDRAULIC SYSTEM	K2—14
MAINTENANCE	
—Brake pad and shoe renewal	K2— 3
—Front brake adjustment	K2— 3
—Rear brake adjustment	K2— 3
—Brake fluid level	K2— 3
—Renewing the brake fluid	K2— 4
—Flushing the hydraulic system	K2— 4
—Flexible hoses	K2— 4
MASTER CYLINDER	K2—18
—To remove and refit	K2—17
—To dismantle and reassemble	K2—17
MASTER CYLINDER RESERVOIR	K2—16
—To remove and refit	K2—16
NON-RETURN VALVE	K2—27
—To remove and refit	K2—27
PREVENTIVE MAINTENANCE	K2— 5
REAR DRUM BRAKES	K2— 9
RENEWING SEALS	K2— 5
REPLACEMENT SERVICE UNITS	K2— 5
SERVO AIR CLEANER	K2— 5
—To remove and refit	K2— 5
SHOE HORN (Brake shoe removing tool)	K2—27
VACUUM SERVO UNIT	K2—23
—Operation	K2—23
—Servicing	K2—24
—To remove and refit	K2—24
—To dismantle and reassemble	K2—24
—Testing equipment	K2—26
WHEEL CYLINDERS	K2—11
—To remove and refit	K2—11
—To dismantle and reassemble	K2—13

GIRLING BRAKES

GENERAL DESCRIPTION

These cars are equipped with Girling Brakes, disc brakes are fitted to the front wheels and drum brakes to the rear wheels. All four brakes are hydraulically operated, pressure being generated in the master cylinder by application of the brake foot pedal.

While the engine is running, this pressure is boosted by suspended vacuum servo unit to ensure light pedal pressure.

The handbrake operates the rear brakes only by an independent mechanical linkage.

MAINTENANCE

Maintenance checks will be required at regular intervals as given in the "Owner's Service Book" and will include the following:—

(i) Checking master cylinder fluid level.

(ii) Checking brake pads for wear and transposing to equalise wear.

(iii) Checking brake shoes for wear and cleaning out drums.

(iv) Checking flexible hoses for chafing, deterioration and leakage.

(v) Checking hydraulic pipes, connections, master cylinder calipers and wheel cylinders for leaks and damage.

(vi) Lubricating foot pedal pivot, handbrake lever and linkage.

(vii) Checking security of master cylinder, calipers, back plates, metal pipes and servo unit.

(viii) Checking caliper and wheel cylinder pistons for freedom of movement and corrosion.

(ix) Checking brake discs and drums for scoring.

(x) Renewing vacuum servo air cleaner, when applicable.

(xi) Renewing the brake fluid.

(xii) Renewing the flexible hoses and the seals in all hydraulic units.

Brake pad and shoe renewal

The brake pads should be renewed when the friction material has worn down to $\frac{1}{8}$ in. (3 mm.) thick and must be renewed when the minimum thickness of $\frac{1}{16}$ in. (1·6 mm.) is reached.

The brake shoes must be renewed when the linings have worn down to rivet level.

Front brake adjustment

The front brakes require no adjustment as the reducing thickness of the brake pads is automatically cancelled out by the fluid in the hydraulic system, thus the fluid level in the master cylinder reservoir will fall as the brake pads reduce in thickness.

Rear brake adjustment

Automatic

The rear brakes require no adjustment as the reducing thickness of the brake linings is automatically cancelled out each time the handbrake is applied.

Manual

The rear brakes require adjustment at intervals dependent upon conditions of usage. Refer to manually adjusted rear brakes—adjustment. See pages 29 and 30.

Brake fluid level

1. The brake fluid level in the master cylinder reservoir must be kept within $\frac{1}{2}$ in. (12 mm.) of the filler cap orifice.
2. Never fill the master cylinder reservoir completely since the expansion of the brake fluid, particularly in hot weather, may cause hydraulic pressure to build up and the brakes to bind.
3. Use only the recommended type of brake fluid, see under "Recommended Lubricants—Section P".
4. Exercise care not to spill any brake fluid on the car body as it is injurious to paintwork.
5. Before removing the filler cap from the master cylinder reservoir, clean the area around both components to prevent dirt entering the hydraulic system.
6. Ensure that the seal in the filler cap is in good condition and its air vent is unobstructed, as the obstruction may cause hydraulic pressure to build up and the brakes to bind.
7. The addition of brake fluid may be required to compensate the lowering of the fluid level due to the reducing thickness of the brake pads, but a sudden fall in fluid level will indicate a leak somewhere in the hydraulic system which must immediately be traced and rectified.

Renewing the fluid

1. Pump the old fluid from the hydraulic system by slackening off the bleed screw nearest to the master cylinder half to three-quarters of a turn and when the fluid ceases to flow retlghten the bleed screw. Proceed with the next nearest and finish at the bleed screw furthest from the master cylinder in a similar manner. Discard all the old fluid.

2. Remove the master cylinder reservoir and wash out thoroughly with Girling Cleaning Fluid or Commercial Methyl Alcohol and dry off, see under "Master cylinder reservoir—To remove and refit".

3. Remove the calipers completely from the car, withdraw the two pistons from each and wash out thoroughly with Girling Cleaning Fluid or Commercial Methyl Alcohol and dry off, see under "Caliper—To remove and refit" and "To dismantle and reassemble".

4. Refill the master cylinder reservoir with the recommended brake fluid, see under "Recommended Lubricants—Section P" and bleed the hydraulic system of air, see under "Bleeding the hydraulic system".

Alternative method

Alternatively, the brake fluid can be renewed by continually topping up the master cylinder reservoir with fresh brake fluid above the recommended level and "bleeding" each bleed screw in turn until clean brake fluid is seen to flow from each bleed screw. It is **imperative** that air is not permitted to enter the hydraulic system by insufficient topping up, four depressions of the brake pedal will almost empty the master cylinder reservoir. It is **important** too that the brake pedal is depressed sharply but permitted to return unassisted after a short pause.

Flushing the hydraulic system

Renewing hoses and seals

When the hydraulic system has become contaminated with an incorrect fluid it must be flushed out immediately and refilled with fresh brake fluid of the recommended type. Should ever the contamination be caused by a mineral oil, in addition to the flushing, all hoses and seals must be renewed.

1. Pump the old fluid from the hydraulic system by slackening off the bleed screw nearest to the master cylinder half to three-quarters of a turn and when the fluid ceases to flow retighten the bleed screw. Proceed with the next nearest and finish at the bleed screw furthest from the master cylinder in a similar manner. Discard all the old fluid.

2. Remove the master cylinder reservoir and wash out thoroughly with Girling Cleaning Fluid or Commercial Methyl Alcohol and dry off, see under "Master cylinder reservoir—To remove and refit".

3. Remove the calipers completely from car, withdraw two pistons from each and wash out thoroughly with Girling Cleaning Fluid or Commercial Methyl Alcohol then dry off, see under "Caliper—To remove and refit" and "To dismantle and reassemble".

4. When there has been no contamination fill the master cylinder reservoir with Girling Cleaning Fluid or Commercial Methyl Alcohol and pump out through each bleed screw, while continuing to refill the master cylinder reservoir until at least a quart (1·1 litres) has passed through each bleed screw; discard all the old fluid.

5. When contamination has been experienced, remove the remaining hydraulic units, dismantle, clean, and refit new seals to all units, see under their respective headings. Wash out and dry off the metal pipes but **renew** all flexible hoses and the stop light switch.

6. Refill the master cylinder reservoir with the recommended brake fluid, see under "Recommended Lubricants—Section P" and bleed the hydraulic system of air, see under "Bleeding the hydraulic system".

Flexible hoses

The flexible hoses must be examined for chafing, general deterioration and leakage. When there is any doubt concerning the condition of the flexible hose it must be renewed. Should a flexible hose become blocked, it must never be cleared by probing but renewed.

SERVO AIR FILTER

The servo unit air filter element is of moulded cellular construction and must be renewed when soiled.

To remove and refit

1. Remove the cover by withdrawing the centre screw, discard the soiled filter element, clean the cover and rubber washer.
2. Position the rubber washer on the servo unit followed by the new element and secure the cover with the centre screw.

RENEWING SEALS AND REPLACEMENT SERVICE UNITS

When the hydraulic system has become contaminated with a mineral oil or the brake fluid, through old age, has become "gummy"; the seals in all the hydraulic units must be renewed.

The most satisfactory method of seal renewal or overhauling any unserviceable hydraulic unit is to renew it with a Replacement Service Unit available through the spares channels. Full details of this Service will be found in the "Parts List" under "Replacement Service Units".

In certain overseas territories this procedure may be impracticable or when the workshop available is up to the "Fuel Injection Equipment" standard of cleanliness, Service Kits containing the seals and, when necessary, tubes of lubricants, are available and can be used for the overhaul of all hydraulic units.

PREVENTIVE MAINTENANCE OF THE BRAKING SYSTEM

In order to maintain peak efficiency of the hydraulic system, the brake manufacturers recommend:—

(i) Brake fluid is renewed every 18 months or 24,000 miles (40,000 km.), whichever is the sooner.

(ii) Flexible hoses are renewed every 3 years or 40,000 miles (65,000 km.), whichever is the sooner.

(iii) Seals are renewed in all hydraulic units every 3 years or 40,000 miles (65,000 km.) or at the third change of brake pads, whichever is the sooner.

FRONT DISC BRAKES

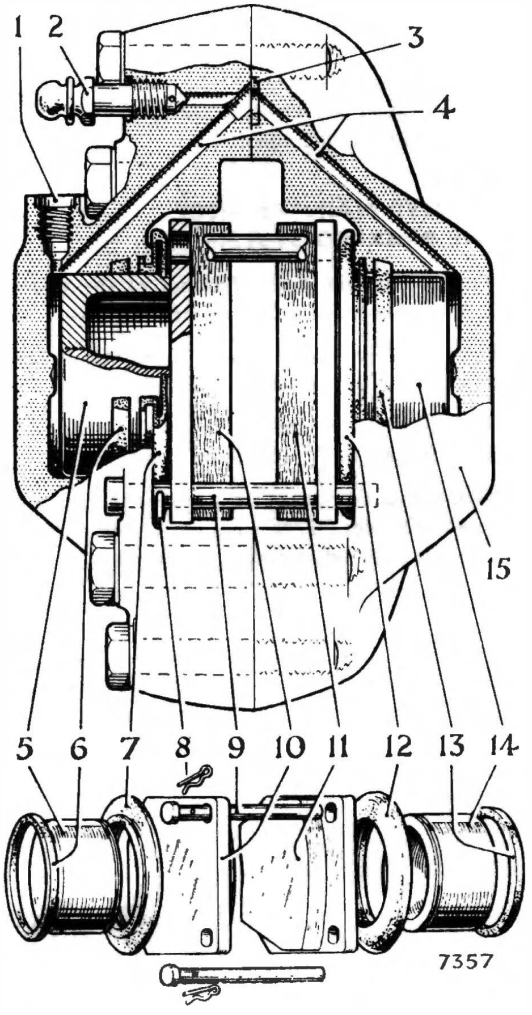

Fig. 1. *Exploded view of caliper assembly*

1. FLEXIBLE HOSE CONNECTION
2. BLEED SCREW
3. FLUID CHANNEL SEAL
4. INTERNAL FLUID CHANNEL
5. & 14. PISTONS
6. & 13. PISTON SEALING RINGS
7. & 12. DUST COVERS
8. RETAINING CLIPS
9. RETAINING PINS
10. & 11. BRAKE PADS
15. CALIPER BODY

DESCRIPTION

Each front brake assembly consists of a disc which is attached to and rotates with the hub and a caliper mounted on the stub axle carrier which straddles the rotating disc.

The caliper houses two co-axially aligned pistons operating on a pair of brake pads, one each side of the disc. The brake pads are retained in the caliper by pins and spring clips. The pistons and bores are protected by dust covers fitted in the open end of the bores and fluid leakage is prevented by rubber sealing rings fitted in annular grooves machined inside the bores.

A metal splash guard, fitted on the stub axle carrier, protects the inner face of the disc from road dirt while its outer face is protected by the road wheel.

Application of the brake pedal generates pressure in the hydraulic system causing the pistons to apply equal pressure on each brake pad moving the latter into contact with the disc.

When the brake pedal is released, pressure on the brake pads collapses but the pistons and brake pads remain in position for the next brake application. In this manner brake pad wear is automatically taken up, thus no manual adjustment is necessary.

After negotiating a ford or water splash, or after driving on flooded roads it may be necessary to lightly apply the brakes a number of times in order to dry out the brake pads and discs to maintain full braking power. It is also advisable to do this after or during prolonged driving in wet weather, in circumstances when the brakes are not often in use, such as may occur on motorways, etc.

BRAKE PADS

The friction material of the brake pad is bonded and in some instances riveted to the backing plate and can therefore only be renewed by the fitment of complete brake pad assemblies.

To examine for wear

1. Apply the handbrake, jack up the front of the car and remove the front wheel.
2. Observe the thickness of the friction material of the brake pads and renew accordingly.
3. When it is observed that one brake pad has worn thinner than the other, normally the inner, and providing it is outside the specified minimum, the brake pads can be transposed across the disc, see under "Brake pads—To remove and refit".

To remove and refit (Fig. 1)

1. Apply the handbrake, jack up the front of the car and remove the front wheel.
2. Withdraw the two brake pads from the caliper by removing the two retaining clips and pins.
3. Refitting is the reverse of the removal sequence, but particular attention must be given to the following:—
   (i) Check the condition and fitting of the rubber dust covers and renew or refit as necessary, see under "Caliper—To dismantle and reassemble".
   (ii) Check the fluid level in the master cylinder reservoir to assess the possibility of overflowing when the pistons are pressed into their calipers. The overflowing can be staunched by wrapping the reservoir in an absorbent cloth or by syphoning off some of the fluid. Top up to correct level on completion of the brake pad change.
   (iii) Ensure that the brake pads, discs and calipers are free from dirt and grease.
   (iv) Pump the brake pedal until solid resistance is felt.
   (v) Do not make snap applications of the brakes or expect full braking power until the brake pads have bedded into the disc.

CALIPERS

To remove and refit

1. Apply the handbrake, jack up the front of the car and remove the front wheel.
2. Detach the caliper from the stub axle carrier by withdrawing two bolts and washers.
3. Suspend the caliper nearby without straining the flexible hose. When it is necessary to remove the caliper from the car, disconnect the pressure pipe from the flexible hose and remove the flexible hose from the support bracket, see under "Flexible hose—To remove and refit".
4. Refitting is the reverse of the removal sequence but particular attention must be given to the following:—
   (i) The longer bolt is fitted through the top lug of the caliper and through the rear lug of the steering arm.
   (ii) Bleed the hydraulic system of air when the caliper has been removed from the car, see under "Bleeding the hydraulic system".
   (iii) Pump the brake pedal until solid resistance is felt.

To dismantle and reassemble (Fig. 1)

1. Remove the two brake pads from the caliper by withdrawing two retaining clips and pins.
2. Clean off all road dirt from the caliper and pistons. **Do not split the caliper in two,** see under "Bridge bolts".
3. Withdraw the pistons, one at a time from the caliper, through the dust cover and remove the two dust covers from the open end of the piston bores.
4. Remove the two sealing rings from the piston bores using a plastic or wooden probe to avoid damaging the annular grooves.
5. Reassembly is the reverse of the dismantling sequence but particular attention must be given to the following:—
   (i) All parts must be meticulously cleaned and re-assembled under equally clean conditions.
   (ii) Dry and coat the bores in the caliper, pistons and sealing rings with a liberal coating of brake fluid.
   (iii) Work the sealing rings into the large annular groove in the piston bores with the fingers.
   (iv) Insert the protruding lip of one dust cover into the groove in the open end of the piston bore; feed the piston, closed end first, through the dust cover into the bore to its fullest extent and fit the outer lip of the dust cover into the groove in the piston. Repeat with the second piston and dust cover.

Caliper bridge bolts

NO attempt must be made to remove the caliper bridge bolts joining the two halves of the caliper together.

There is no point in doing so and in addition, the torque loadings to which the bridge bolts are tightened are critical.

When, in an emergency, the bridge bolts have been removed and, in the event of the fluid channel seal being undamaged, the caliper and bridge bolts must be scrupulously cleaned, dried and reassembled. Then, the bridge bolts tightened to the torque loadings given after the next paragraph. When reassembled, the caliper must be checked for fluid leaks under maximum pedal pressure while refitting it to the car by positioning a block of wood between the two pistons.

It must be understood that this will only provide a temporary remedy and the caliper must be returned to the manufacturers for overhaul at the first opportunity.

Bridge bolts—inner	60 lb. ft. (8·30 kg.m.)
Bridge bolts—outer	45 lb. ft. (6·22 kg.m.)

DISCS

Maximum run-out ·004 in. (·10 mm.)

The disc must be renewed when it has excessive run-out, suffered damage or become excessively scored.

Run-out

Excessive run-out of the disc causes the brake pads to knock the pistons back into the caliper and creates excessive pedal travel when the brakes are applied, thus it is important to keep the run-out to a minimum.

When the run-out exceeds the specified maximum, the disc can often be repositioned in relation to the hub to obtain a more satisfactory combination of manufacturing tolerances.

To check

1. Apply the handbrake, jack up the front of the car and remove the front wheel.
2. Prise off the hub cap, discard the split pin and tighten the castellated nut to a torque of 15—20 lb. ft. (2·07—2·76 kg.m.) whilst rotating the hub.
3. Mount a dial test indicator on the caliper or stub axle carrier so the stylus bears upon the disc approximately 1·00 in. (25 mm.) from the outer edge.
4. Rotate the disc and note the D.T.I. reading, when the "run-out" exceeds the specified maximum it may be sometimes reduced by repositioning the disc on the hub.
5. Set the hub endfloat, see under "Hub adjustment" in Section F.
6. Check the run-out as described in operations 3 and 4. Should the "run-out" exceed the specified maximum an investigation as to the condition of the hub bearings must be made.
7. Lock the castellated nut using a new split pin, fit the hub cap, front wheel and remove the jacks.

To remove and refit

1. Apply the handbrake, jack up the front of the car and remove the front wheel.
2. Remove the caliper from the stub axle carrier, see under "Caliper—To remove and refit", suspend nearby without straining the flexible hose.
3. Remove the disc and hub assembly from the stub axle, see under "Hubs—To remove and refit—Section F".
4. Remove the disc from the hub by withdrawing four bolts and washers.
5. Refitting is the reverse of the removal sequence but particular attention must be given to the following:—
   (i) Ensure the fitting faces of the hub and disc are free from dirt and burrs. In the instance of a replacement disc ensure that the protective coating is completely washed off.
   (ii) The four bolts are tightened to the torque given in the "General Data Section".
   (iii) The disc and hub assembly is refitted and the disc "run-out" checked, see under "Front hub—To remove and refit—Section F" and "Disc run-out—To check".
   (iv) Do not make snap brake applications or expect full braking power until the brake pads have bedded into the discs.

REAR DRUM BRAKES

DESCRIPTION

The rear brakes incorporate leading and trailing brake shoes operated by a single freely mounted wheel cylinder. Adjustment for lining wear is effected automatically each time the handbrake is applied by a pawl and ratchet mechanism incorporated in the wheel cylinder.

The two brake shoes are supported by platforms pressed in the back plate and spring loaded steady posts keep the brake linings parallel to the braking surface of the brake drum.

As hydraulic pressure is applied, the wheel cylinder piston moves the leading brake shoe outwards to the brake drum. As the leading brake shoe meets the brake drum, further movement of the wheel cylinder piston causes the wheel cylinder body to slide in the back plate and moves the trailing brake shoe outwards to the brake drum.

When the hydraulic pressure is released the pull-off springs return the brake shoes and wheel cylinder piston to their rest positions and the rotating brake drum centralises the brake shoes and wheel cylinder on the back plate.

BRAKE SHOES

The two brake shoes, known as leading and trailing, are fitted to each brake back plate and they are each steadied by a spring-loaded steady post.

The leading brake shoe is actuated by the piston of the wheel cylinder or handbrake lever while the trailing brake shoe is actuated by the reaction of the wheel cylinder body as its slides in the back plate slot.

Always fit factory-lined replacement brake shoes and new pull-off springs. These brake shoes have the correct type of lining which is ground accurately to size, thus ensuring an easy and quick bed-in to the brake drum.

To examine for wear

1. Chock the front wheels, release the handbrake, jack up the rear of the car and remove the rear wheel.
2. Remove the brake drum and distance piece from the hub by withdrawing a countersunk screw, clean all dust from the brake drum.
3. Observe the thickness of the brake lining above the rivets.
4. When they have worn down to rivet level, they must be renewed, see under "Brake shoes—To remove and refit".
5. Do not expect full braking power until the new brake linings have bedded into the brake drums.

To remove and refit (Fig. 2)

1. Chock the front wheels, release the handbrake, jack up the rear of the car and remove the rear wheel.
2. Remove the brake drum and distance piece, when fitted, from the hub by withdrawing a countersunk screw.
3. Withdraw the two brake shoe steady posts from the back plate by holding the head of the steady post and rotating the dished washer 90° and removing the spring and second dished washer.
4. Remove the toe end of the trailing brake shoe from the wheel cylinder tappet followed by the heel end from the fixed abutment, see Fig. 12.
5. The tension of the two pull-off springs is now released and the leading brake shoe can now be disengaged from the wheel cylinder lever.

   When the lining material has worn down to rivet level new brake shoes must be fitted.
6. Retain the piston and tappet within the wheel cylinder body by applying a rubber band.
7. Refitting is the reverse of the removal sequence, but particular attention must be given to the following:—
   (i) Check the security of the back plate bolts.
   (ii) Ensure that the wheel cylinder moves freely within the back plate slot; when this condition is evident, determine and eliminate the cause of the stiffness.
   (iii) Smear the slots in the fixed abutment and tappet with Girling White Brake Grease; lubricate the threads of the tappet and adjuster wheel together with the body of the adjuster wheel, normally inside the wheel cylinder body, with molybdenum disulphide grease.
   (iv) Free off the tappet in the adjuster wheel by turning it back 2½ turns after screwing it in to its fullest extent; this will ensure that the tappet is not threadbound, there must be as little friction as possible between these components.

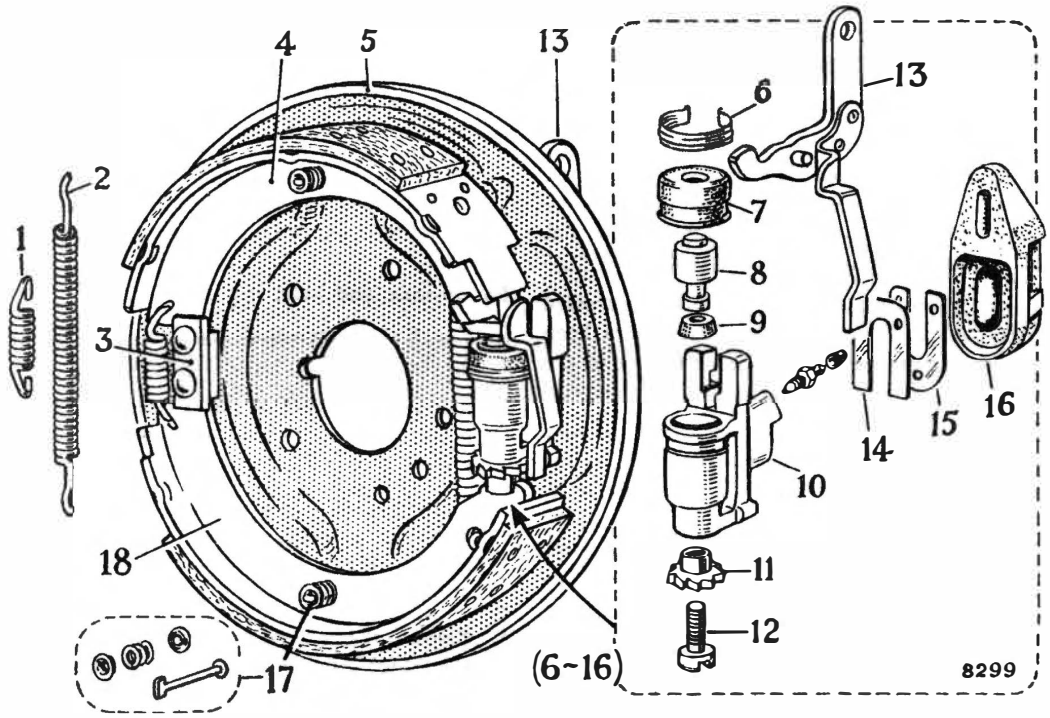

1. SHORT PULL-OFF SPRING
2. LONG PULL-OFF SPRING
3. FIXED ABUTMENT
4. LEADING BRAKE SHOE
5. BACK PLATE
6. CLIP
7. DUST COVER
8. PISTON
9. TAPERED SEAL
10. WHEEL CYLINDER BODY
11. ADJUSTER WHEEL
12. TAPPET
13. LEVER AND EXTENSION
14. SPRING PLATE
15. RETAINER PLATE
16. DUST COVER
17. STEADY POST
18. TRAILING BRAKE

Fig. 2. *Exploded view of left-hand rear brake back plate assembly*

(v) When fitting new brake shoes also fit new pull-off springs, the long spring is fitted between the back plate and the brake shoe webs.

(vi) Centralise the brake shoes on the back plate and rotate the adjuster wheel in the appropriate direction; the right-hand adjuster wheel has a right-hand thread while the left-hand adjuster wheel has a left-hand thread, to expand the brake shoes until there is just sufficient clearance to enable the brake drum to be fitted; this will minimise the initial adjustment.

(vii) Clean all dust from inside the brake drum and examine it for score marks, when the brake drum is badly scored it must be renewed.

(viii) Adjust the rear brakes by applying the hand-brake a number of times.

(ix) Do not expect full braking power until the brake shoes have bedded into the brake drums.

BRAKE ADJUSTING MECHANISM (Fig. 3)

The brake adjusting mechanism is incorporated in the wheel cylinder and actuated by an extension attached to the wheel cylinder lever; it consists of the following:—

(i) A tappet and adjuster wheel, freely mounted in the wheel cylinder body at the opposite end to the piston, ratchet type teeth are machined on the outer edge of the adjuster wheel.

(ii) A metal extension is attached to the wheel cylinder lever, the tip of which forms a pawl and rests on the peak of one adjuster wheel tooth.

(iii) A torsion type return spring mounted on a bracket welded to the outer face of the back plate, returns the wheel cylinder lever to the rest position.

When there is no lining wear and the handbrake is applied, the wheel cylinder piston will move the leading brake shoe into contact with the brake drum and the wheel cylinder body sliding in its slot will move the trailing brake shoe into contact with the brake drum.

Simultaneously with this movement, the tip of the wheel cylinder lever extension moves along the inclined face of the adjuster wheel ratchet teeth but without rotating it.

As lining wear takes place, the movement of the wheel cylinder lever and extension increases and its tip will rotate the adjuster wheel and extend the tappet to cancel out the lining wear.

On releasing the handbrake, the wheel cylinder lever will be returned to its rest position by the torsion spring and the extension will adopt its normal position on the peak of one ratchet tooth.

Initial adjustment

Periodical adjustment is unnecessary but adjustment will be required after any brake shoes have been refitted.

1. Apply the handbrake unhurriedly a number of times, to prevent unnecessary wear on the pawl and ratchet mechanism in the handbrake lever, the button on top of the lever can be depressed during the whole operation.
2. Stop when the handbrake lever reaches a constant height.

WHEEL CYLINDERS

The wheel cylinder consists of an alloy body, housing a piston and tapered seal which are protected by a rubber dust cover retained by a metal clip.

The wheel cyinder body adjacent to the head of the piston is built up to form a pivot for the lever of the handbrake. The longer and outer end of this lever is attached to the handbrake cable or brake rod while the short end locates an aperature in the toe end of the leading brake shoe web.

A tappet and adjuster wheel is fitted to the opposite end of the wheel cylinder body and with an extension on the wheel cylinder lever forms the self-adjusting mechanism.

The wheel cylinder is a sliding fit in the back plate thus facilitating centreing of the brake shoes. The wheel cylinder is located in its slot by spring and retaining plates fitted on to the neck of the wheel cylinder body as it protrudes through the back plate. The protruding portion of the wheel cylinder body contains two tappings, which accommodate the two pressure pipes or pressure pipe and bleed screw for right- and left-hand wheel cylinders respectively.

To remove and refit (Fig. 2)

1. Remove the brake shoes from the back plate, see under "Brake shoes—To remove and refit".
2. Detach the handbrake cable or rod from the wheel cylinder lever by withdrawing the spring clip from the clevis pin, removing the washers and clevis pin from the cable forkend or by discarding the split pin and releasing the spire clip on the outer end of the brake rod.
3. Withdraw the hydraulic pressure pipe(s) from the wheel cylinder by releasing the union nut(s) and remove the bleed screw as necessary, trapping any escaping fluid in a drip tray.
4. Remove the torsion spring from the wheel cylinder lever and backing plate bracket with a pair of pliers.
5. Remove the rubber dust cover, retainer and spring plates from the wheel cylinder lever and body; holding the wheel cylinder lever withdraw the wheel cylinder from the backplate slot, remove the wheel cylinder lever by moving it down into the back plate slot.
6. Identify the wheel cylinder left- or right-hand.
7. Refitting is the reverse of the removal sequence, but particular attention must be given to the following:—

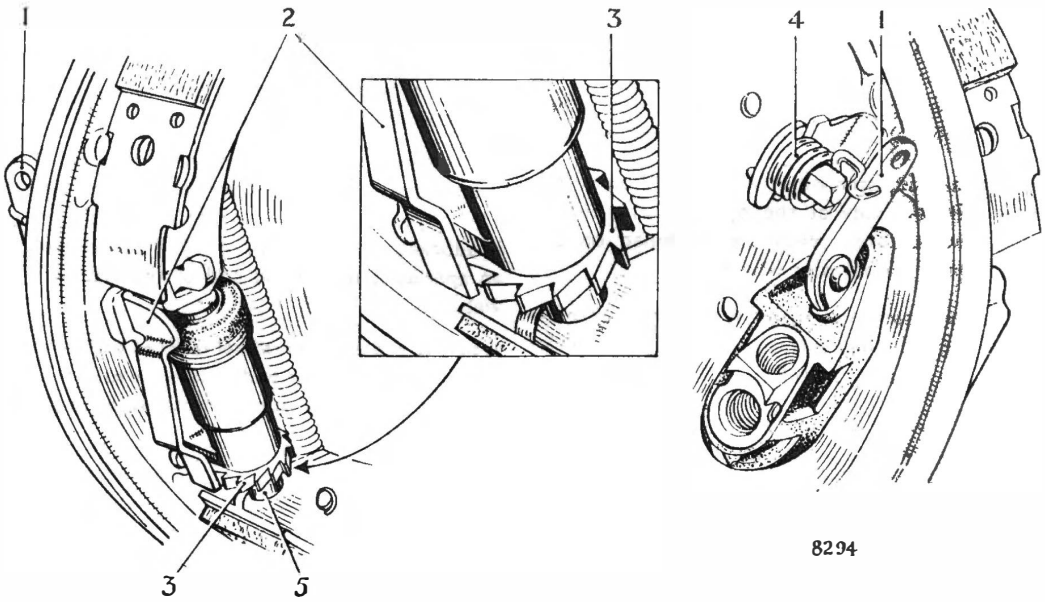

1. WHEEL CYLINDER LEVER
2. EXTENSION
3. ADJUSTER WHEEL
4. TORSION TYPE SPRING
5. TAPPET

Fig. 3. *Internal and external views of brake back plate showing self-adjusting wheel cylinder with an enlarged view of the wheel cylinder extension and adjuster wheel*

(i) Ensure that the wheel cylinder body has complete freedom of movement within the back plate slot, **this is important.**

(ii) Feed the wheel cylinder lever upward and into the back plate slot, feed the neck of the wheel cylinder body into the back plate slot and locate wheel cylinder lever pivot across the forked extension of the wheel cylinder body; fit the spring plate to the neck of the wheel cylinder body from the lever end, fit the retainer plate from the bottom end of the wheel cylinder neck and engage the pips of the spring plate.

(iii) Position the spring clip on the handbrake cable clevis pin towards the rear of the car or the spring clip above the brake rod and fit a new split pin.

(iv) Bleed the hydraulic system of air, see under "Bleeding the hydraulic system."

(v) Adjust the rear brakes, see under "Initial adjustment".

(vi) Check the handbrake adjustment, see under "Handbrake adjustment".

To dismantle and reassemble (Fig. 2)

1. Clean off all road dirt and when working on two or more wheel cylinders identify them, left or right-hand.
2. Withdraw the tappet and adjuster wheel from the wheel cylinder body by discarding the rubber band.
3. Remove the dust cover at the piston end by releasing the metal clip.
4. Eject the piston from the wheel cylinder body by applying low pressure air to the pressure pipe or bleed screw tappings.
5. Remove the tapered seal from the piston.
6. Reassembly is the reverse of the dismantling sequence, but particular attention must be given to the following:—
   (i) All parts must be meticulously clean and re-assembled in equally clean conditions.
   (ii) The tapered seal is fitted to the piston with a liberal coating of brake fluid and with the wider end of the taper away from the head of the piston.
   (iii) Smear the piston with Girling Red Rubber Grease and feed the piston and seal into the wheel cylinder body, exercising care not to damage the fine edge of the seal.
   (iv) Smear the inside edge of the dust cover with Girling Red Rubber Grease.
   (v) The adjuster wheel having the identification ring has a left-hand thread and with its tappet is fitted to the left-hand wheel cylinder; the plain adjuster wheel has a right-hand thread and with its tappet is fitted to the right-hand wheel cylinder.

BRAKE BACK PLATE

The brake back plate is a steel pressing suitable shaped to support the brake adjuster, steady posts, wheel cylinder and brake shoes. The back plate is mounted on the outer ends of the rear axle casing but cannot be removed without disconnecting the hydraulic system and removing the rear hub.

The left-hand back plate can be identified by the small cut-out in the axle casing aperture.

To remove and refit

1. Remove nave plate and slacken off the axle shaft nut.
2. Chock the front wheels, release the handbrake, jack up the rear of the car and remove the rear wheel.
3. Remove the brake drum and, when fitted, the distance piece from the hub by withdrawing the countersunk screw.
4. Detach the handbrake cable or rod from the wheel cylinder lever by withdrawing the spring clip from the clevis pin, removing the plain and spring washers and clevis pin from the cable forkend or by discarding the split pin and releasing the spring clip.
5. Disconnect the pressure pipe(s) from the wheel cylinder by releasing the union nut(s) and trapping any escaping fluid in a drip tray.
6. Remove the hub and key from the tapered end of the axle shaft by removing a nut and washer and fitting a suitable hub remover on the wheel studs, see under "Axle shaft—To remove and refit, Rear Axle, Section G".
7. Remove the back plate, oil catcher and sealing joints from the axle flange by withdrawing five nuts, washers and bolts; note the position and thickness of the sealing joints, see under "Axle shaft—To remove and refit, Rear Axle, Section G".
8. Refitting is the reverse of the removal sequence, but particular attention must be given to the following:—
   (i) Refit the sealing joints, one each side of the back plate as necessary, see under "Axle shaft—To remove and refit, Rear Axle, Section G".
   (ii) Position the head of the clevis pin above the handbrake cable forkend or the spring clip above the brake rod and fit a new split pin.
   (iii) Bleed the hydraulic system of air, see under "Bleeding the hydraulic system".
   (iv) Adjust the rear brakes, see under "Initial adjustment".
   (v) Check handbrake adjustment, see under "Hand-brake adjustment".

HYDRAULIC SYSTEM

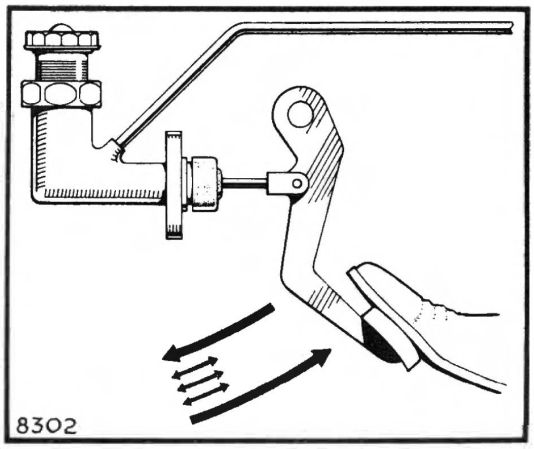

Fig. 4. *Indicating the long and short pedal strokes necessary to bleed the hydraulic system of air*

GENERAL

Great cleanliness is essential when dealing with any part of the hydraulic system and especially when the brake fluid is concerned. Dirty or aerated brake fluid must never be used in the hydraulic system, never use fluid which has been bled from the hydraulic system.

Use only the recommended type of brake fluid for topping up the master cylinder reservoir.

BLEEDING THE HYDRAULIC SYSTEM

Bleeding or expelling air from the hydraulic system is not a maintenance operation and will only be necessary when a portion of the hydraulic system has been disconnected or when the fluid level in the master cylinder reservoir has fallen so low that air has entered the system.

Always keep a careful check on the fluid level in the master cylinder reservoir during bleeding since it is most important that a high level of fluid is maintained. Should air enter the master cylinder from the reservoir, the complete operation must be repeated.

1. Destroy all vacuum in the servo unit by repeated operation of the brake pedal, otherwise difficulty will be experienced in completely expelling the air from the hydraulic system. **Do not** start the engine before bleeding the system has been completed.
2. Ensure that all hydraulic connections are secure and the master cylinder reservoir is filled with fluid which must be kept at a high level during the complete operation.
3. Remove the rubber cap from the bleed screw of the left-hand front caliper, fit the bleed tube and immerse the free end of the bleed tube in a glass vessel containing a small quantity of fluid.
4. Slacken off the bleed screw half to three-quarters of a turn and with an assistant depress the brake pedal a succession of long and short rapid strokes, i.e. the pedal depressed through its full stroke followed by two or three short rapid strokes and then allowed to fly back to the stop with the foot removed; any floor covering that prevents the full pedal stroke must be removed. Actuate the brake pedal in this manner until the fluid entering the glass vessel is free from air bubbles and then re-tighten the bleed screw on the next downward stroke of the brake pedal to the tightening torque given in the "General Data Section" (Fig. 4).
5. Remove the bleed tube and glass vessel from the bleed screw and refit the rubber cap.
6. Repeat the previous three operations with the right hand front caliper and finish with the wheel cylinder of the left-hand rear brake; the right-hand wheel cylinder has no bleed screw.
7. Top up the master cylinder reservoir to the correct level and refit the filler cap ensuring its seal is in good condition and its air vent is unobstructed, as an obstruction in the latter may cause pressure to build up and the brakes to bind.

Bleed screws

The calipers and wheel cylinder have conical ended bleed screws which bed on to a seat formed in the bottom of the bleed screw tapping in the body of that particular component.

The bleed screws must never be over-tightened since their threads may become stripped. Use only short spanners to tighten the bleed screws, the tightening torque is given in the "General Data Section".

Checking for leaks

1. Clean the connections, metal pipes and flexible hoses of all road dirt.

2. Start and run the engine when a vacuum servo unit is fitted.

3. Apply firm pressure to the brake pedal for a number of seconds while an assistant examines the connections, metal pipes and flexible hoses for leakage.

4. When leakage is observed at the connections, it may be necessary to dismantle the faulty connection to determine the cause, for tightening the bleed screw or union nut may only lead to stripped threads. Leaking metal pipes or flexible hoses must be renewed.

   After making any disconnections it will be necessary to bleed the hydraulic system of air, see under "Bleeding the hydraulic system".

BRAKE PIPE RUN

The pressure port of the master cylinder is connected by a metal pipe, which runs across the rear bulkhead, to the inlet port of the servo unit mounted in a rear corner of the engine compartment and the outlet port of the servo unit is connected by a second metal pipe to the top forward connection of the five-way connector mounted on the right-hand front wheel arch.

The centre connection of the five-way connector accommodates the stop light switch while the bottom forward and bottom rearward connections are connected by metal pipes and flexible hoses to the left- and right-hand front brake calipers respectively. The junctions of the metal pipes and flexible hoses, in addition to the metal pipe to the left-hand front brake caliper are supported in brackets and clips welded to the rear face of the front suspension crossmember.

The top rearward connection of the five-way connector is connected by a metal pipe, which passes through the wheel arch and runs rearward under the floor of the car to a flexible hose mounted in a bracket welded to the car floor.

The second end of the rear flexible hose is fitted in a support bracket welded on the rear axle casing which is connected by a short pipe to the lower tapping of the right-hand wheel cylinder. The upper tapping of this wheel cylinder is connected by a pipe which runs the width of the rear axle to the lower tapping of the left-hand wheel cylinder, the upper tapping accommodates the bleed screw.

The pressure pipes in the engine compartment, on the front suspension cross beam, under the floor and on the rear axle are attached by rubber sleeves and clips to absorb vibration which could result in possible fracture.

To provide the vacuum for servo assistance, the servo unit is connected to the engine inlet manifold by a flexible hose and a non-return valve.

Bending pressure pipes

The diameter of the pressure pipes is as follows:—

Pressure: From master cylinder to brake servo unit and from brake servo unit to calipers and wheel cylinders: $\frac{3}{16}$ in. diameter with $\frac{7}{16}$ in. 20 T.P.I. U.N.F. union nuts.

Should the pressure pipes be supplied in straight lengths, they must be shaped to follow the form of the original. In the event of the original being damaged beyond usefulness, a pattern must be made up from a length of heavy gauge malleable wire.

The new pipe length can easily be shaped with the fingers or on a pipe shaping "dolly" but in the absence of the latter, a piece of pipe similar in radius to the shape required can be used. To assist in forming the shape adjacent to the ends of the new length, a five-way connector can be screwed onto the union nut to provide a better grip.

Union nuts

The union nuts must never be overtightened since their threads may become stripped. Use only short spanners to tighten the union nuts, the tightening torque is given in the "General Data Section".

FLEXIBLE HOSES

To accommodate the constantly changing position of the front wheels and the rear axle whilst the car is moving, flexible hoses are used to connect the pressure pipes to the front calipers and the metal pipes mounted on the rear axle casing.

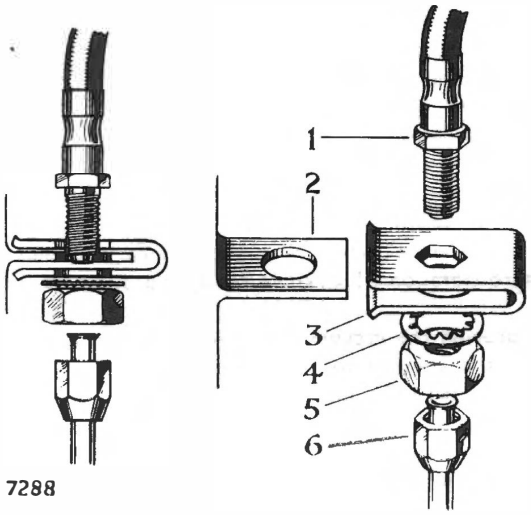

1. HOSE HEXAGON
2. SUPPORT BRACKET
3. LOCATING PLATE
4. WASHER
5. NUT
6. PRESSURE PIPE UNION NUT

Fig. 5. *Flexible hose connection. In some instances the locating plate (3) is omitted*

To remove and refit (Fig. 5)

1. Grip the hexagon of the flexible hose adjacent to the support bracket with a spanner, when a locating plate is fitted to the support bracket this spanner is unnecessary; detach the pressure pipe from the flexible hose by releasing the union nut and trapping any escaping fluid in a drip tray.

2. Still holding the hexagon of the flexible hose, withdraw the flexible hose from the support bracket by releasing the locknut and washer; when a locating plate is fitted, it is unnecessary to hold the flexible hose.

3. Remove the flexible hose and sealing washer from the brake caliper by applying a spanner to the hexagon at that end and permitting its entire length to rotate.

4. Refitting is the reverse of the removal sequence but particular attention must be given to the following:—

   (i) It is essential that the flexible hose is fitted to the brake caliper first and using a new sealing washer.

   (ii) Feed the end of the flexible hose into the support bracket, apply a spanner to the hexagon and set the run of the hose to clear all obstructions that could cause chafing. Secure the flexible hose to the support bracket with the washer and locknut and fit the pressure pipe to the protruding threaded end of the flexible hose with the union nut while holding the hexagon with the spanner to prevent the flexible hose from moving.

   When fitted, slide the locating plate onto the support bracket so the plain hole is on the pressure pipe side. Feed the end of the flexible hose into the locating plate and support bracket, locating the hexagon within the plate so the run of the flexible hose is clear of all obstructions that could cause chafing. Secure the flexible hose and fit the pressure pipe as described in the previous paragraph.

   (iii) Check that no chafing can occur under conditions of full bump and rebound by bouncing the body of the car up and down. In the instance of the front flexible hoses, position the front wheels on both full locks in addition to the straight ahead position.

   (iv) Bleed the hydraulic system of air, see under "Bleeding the hydraulic system".

MASTER CYLINDER RESERVOIR

Description

The master cylinder reservoir is fabricated from a translucent material and provides instant recognition of the fluid level without removing the filler cap.

The reservoir is screwed directly into the feed port in the end of the master cylinder. It is important to ensure that the filler cap seal is in good condition to prevent fluid leakage and the air vent holes are unobstructed for when these holes become obstructed pressure can build up in the hydraulic system and cause the brakes to bind.

To remove and refit

1. Unscrew the reservoir from the feed port in the front end of the master cylinder trapping the escaping fluid in a drip tray.

2. Refitting is the reverse of the removal sequence, but particular attention must be given to the following:—

   (i) The hydraulic system is bled of air, see under "Bleeding the hydraulic system".

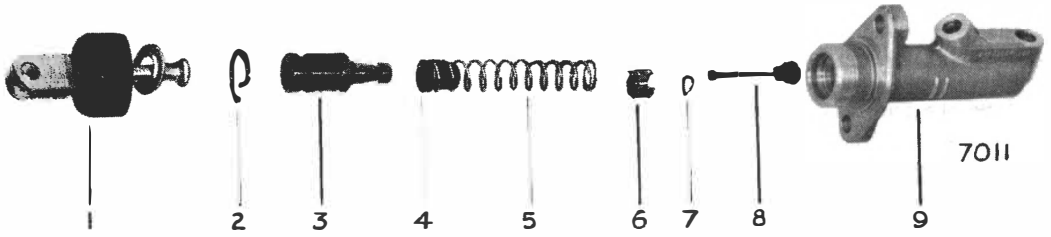

1. PUSH ROD
2. CIRCLIP
3. PISTON AND TAPERED SEAL
4. THIMBLE
5. PISTON RETURN SPRING
6. VALVE SPACER
7. SPRING WASHER
8. CENTRE VALVE AND SEAL
9. MASTER CYLINDER BODY

Fig. 6. *Exploded view of brake master cylinder*

MASTER CYLINDER

Description

The master cylinder is mounted inside the engine compartment on the rear bulkhead.

When pressure is applied to the brake pedal, the piston moves down the cylinder bore compressing the piston return spring against the centre valve and closes the seal over the feed port cutting off the supply of fluid from the master cylinder reservoir. Continued movement of the piston forces the fluid out of the pressure port through the servo unit to the front calipers and rear wheel cylinders and also keeps the centre valve hard on the feed port.

On the return stroke, the piston moves back along the cylinder bore and with the final movement of the piston lifts the centre valve off the feed port thus permitting the free flow of fluid between the master cylinder and its fluid reservoir.

To remove and refit

1. Destroy the vacuum in the servo unit by repeated operation of the brakes, otherwise difficulty will be experienced in completely expelling the air from the hydraulic system. DO NOT start the engine before bleeding the system has been completed.
2. Disconnect the pressure pipe from the master cylinder by releasing the union nut and trapping any escaping fluid in a drip tray.
3. Remove the pedal return spring cap from the master cylinder push rod by moving it forward away from the pedal lever and sliding the cap off the push rod.
4. Identify the position of the clevis pin in the pedal lever and detach the master cylinder push rod from the pedal lever by removing the spring clip, washer and withdrawing the clevis pin.
5. Remove the master cylinder and distance piece from the rear bulkhead inside the engine compartment by removing two nuts, washers and bolts which pass through the mounting flange and collect the pedal return spring from inside the car.
6. Refitting is the reverse of the removal sequence, but particular attention must be given to the following:—
   (i) The pedal lever has two push rod clevis pin holes and the push rod must be returned to its original position.
   (ii) The pedal lever is held rearwards, the pedal return spring is compressed while the spring cap is fed over the master cylinder push rod so its recessed face accommodates the forkend of the push rod.
   (iii) Bleed the hydraulic system of air, see under "Bleeding the hydraulic system".

To dismantle and reassemble (Fig. 6)

1. Ease the dust cover from the push rod end of the master cylinder body.

2. Withdraw the push rod assembly from the master cylinder body by releasing the circlip from the groove in the open end of the cylinder bore.

3. Eject the piston and centre valve assembly from the cylinder bore by applying low pressure air to the feed port in the end of the body.

4. Detach the centre valve assembly from the shouldered end of the piston by easing the leaf of the thimble upward clear of the piston shoulder.

5. Remove the thimble and piston return spring from the stem of the centre valve by compressing the return spring and passing the small end of the valve stem through the keyhole-shaped aperture in the thimble.

6. Withdraw the valve spacer and spring washer from the valve stem and ease the seal from the opposite side of the stem.

7. Ease the tapered seal from the shouldered end of the piston.

8. Reassembly is the reverse of the dismantling sequence but particular attention must be given to the following:—

   (i) All parts must be meticulously cleaned and reassembled under equally clean conditions.

   (ii) The seal is fitted to the centre valve, flat face first, with a liberal coating of brake fluid.

   (iii) The spring washer is fitted to the valve stem, domed face first, followed by the valve spacer so the "legs" encase the spring washer and seal.

   (iv) The piston return spring is fed onto the outside of the thimble and fitted to the valve stem, return spring first; the spring is compressed so the end of the valve stem can be locked in the keyhole-shaped aperture in the thimble, ensure that the piston return spring is located centrally on the valve spacer.

   (v) The tapered seal is fitted to the piston, flat face first and from the shouldered end of the piston with a liberal coating of brake fluid.

   (vi) The piston is fitted to the thimble, press the leaf downward so that the valve and piston assembly lock positively together.

   (vii) Smear the piston with Girling Red Rubber Grease and feed the centre valve and piston assembly into the cylinder bore, centre valve first, exercising care not to damage the fine edge of the seal and so the thimble leaf will be uppermost when the master cylinder is in its fitted position, thus the air between the piston and thimble will rise when the hydraulic system is bled of air.

   (viii) Smear the inside of the dust cover with Girling Red Rubber Grease and ensure that the circlip, which secures the push rod assembly, is fully engaged in its groove in the open end of the cylinder bore.

GIRLING SERVICE KITS

Girling Service Kits, containing the necessary seal(s) and a tube of Girling Red Rubber Grease, are available for all hydraulic units. The appropriate Service Kit must always be obtained when any seal(s) need renewing. Full instructions are included with the seal(s) but the following instructions should also be observed:—

1. When the hydraulic unit has been cleaned of road dirt and dismantled, the cylinder bore and internal parts must be cleaned with Girling Cleaning Fluid and allowed to dry off.

2. Examine the cylinder bore and piston(s); when the working surfaces are smooth to the touch, without corrosion, score marks or ridges, the new seal(s) can be fitted and the unit re-assembled. When there is any doubt as to the condition of the working surfaces, a new replacement hydraulic unit must be obtained.

3. All parts must be meticulously cleaned and re-assembled in equally clean conditions.

4. Fit the new seal(s) to the cylinder bore, piston or valve with a liberal coating of brake fluid giving particular attention to the position of the seal lip which is towards the pressure or feed supply of the fluid.

5. Smear the piston(s) with Girling Red Rubber Grease and insert into the cylinder bore, exercising care not to damage or fold back the fine edge of the seal(s).

6. Smear the inside of the dust cover(s) with Girling Red Rubber Grease, fit to the cylinder body and secure with the metal clip as necessary.

HANDBRAKE

DESCRIPTION

The handbrake operates on the rear wheels only and consists of a hand lever, situated between the driver's seat and the door, with a cable and rod linkage connecting the hand lever to the two levers, one included in each wheel cylinder. The handbrake is automatically adjusted as the rear brakes are adjusted.

The handbrake cable is nylon lined and requires no lubrication.

The rear end of the handbrake inner cable terminates at the lever of one wheel cylinder while the rear end of the outer casing terminates in a clip welded on a brake rod connected to the opposite wheel cylinder lever with the inner end of the rod steadied by a bracket welded to the differential cover of the rear axle.

The wheel cylinder lever attached to the inner cable moves as the handbrake is applied and the opposite wheel cylinder lever, attached to the brake rod, moves due to the reaction of the handbrake cable outer casing. The inner ends of the wheel cylinder levers locate in apertures formed in the webs of the leading brake shoes, thus movement of these levers causes the leading brake shoes to move outwards to the brake drums. Further movement of the wheel cylinder levers causes the wheel cylinder bodies to slide in the back plate slots and move the trailing brake shoes outwards to the brake drums.

HANDBRAKE LEVER

To remove and refit (Fig. 7)

1. Chock the front wheels and release the handbrake.
2. Tilt the driver's seat forward and remove the handbrake lever shield from the door sill by withdrawing three screws.
3. Remove the handbrake lever from the door sill by withdrawing two bolts, washers and distance pieces; detach the cable from the bottom of the lever by withdrawing the spring clip from the clevis pin, removing the washer and clevis pin from the forkend.
4. Refitting is the reverse of the removal sequence but particular attention must be given to the following:—

   The distance pieces are fitted between the handbrake lever and door sill.

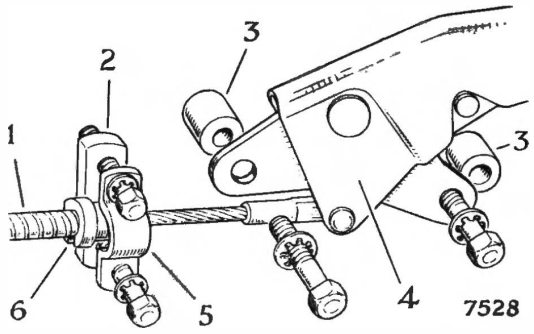

1. HANDBRAKE CABLE
2. DISTANCE PIECE
3. DISTANCE PIECE
4. HANDBRAKE LEVER
5. ABUTMENT CLIP
6. ABUTMENT BUSH

Fig. 7. *The handbrake lever; left-hand drive shown, right-hand drive symmetrically opposite*

HANDBRAKE CABLE

To remove and refit (Figs. 8 and 9)

1. Remove the handbrake lever from the door sill and cable, see under "Handbrake lever—To remove and refit".
2. Detach the handbrake cable from the door sill by withdrawing two bolts and washers from the abutment clip and distance piece, remove the abutment bush from the outer casing.
3. Withdraw the handbrake cable and floor grommet from beneath the car after removing the clip from the car frame by withdrawing a self-tapping screw.
4. Detach the handbrake cable from the wheel cylinder lever by withdrawing the spring clip from the clevis pin, removing the plain and spring washers and clevis pin from the forkend.
5. Remove the handbrake cable from the brake rod abutment by easing the rubber grommet from the end of the outer casing, then sliding the handbrake cable sideways and lifting the inner cable from the brake rod abutment.

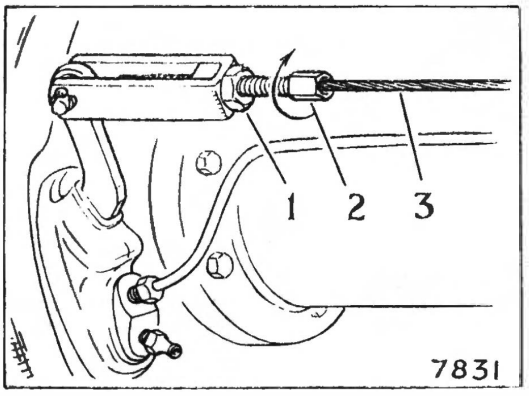

1. LOCKNUT
2. THREADED SLEEVE
3. INNER CABLE

Fig. 8

The handbrake cable adjuster; the arrow indicates the direction of rotation to shorten the cable. Right-hand drive shown, left-hand drive symmetrically opposite

6. Refitting is the reverse of the removal sequence but particular attention must be given to the following:—

   (i) The handbrake cable is fitted at the hand lever end first with the flange of the abutment bush away from the lever.

   (ii) Ensure that the rubber grommets are fitted to the floor and onto the rear end of the outer casing and the rubber sleeve under the frame clip.

   (iii) Position the spring clip of the handbrake cable clevis pin towards the rear of the car.

   (iv) When a replacement handbrake cable has been fitted, the handbrake operation is checked, see under "Handbrake—Adjustment".

HANDBRAKE ROD

To remove and refit

1. Chock the front wheels, release the handbrake and jack up the rear of the car.

2. Withdraw the brake rod from the wheel cylinder lever by discarding the split pin and releasing the spring clip.

3. Detach the rubber grommet from the end of the handbrake outer casing and move it along the inner cable.

4. Hold the brake cable outer casing with one hand, slide the brake rod abutment off the end of the outer casing and detach the brake rod from the inner cable through the slot in the abutment.

5. Withdraw the brake rod from the bearing inside the rear axle clip.

6. Remove the bearing from the rear axle clip when the hole has become elongated.

7. Refitting is the reverse of the removal sequence but particular attention must be given to the following:—

   (i) The spring clip is fed onto the brake rod so the double "prongs" point outward and when clipped over the wheel cylinder lever, the lever is between the short single "prong" and the double "prongs". Fit a new split pin.

   (ii) The rubber grommet is fitted over the end of the outer casing.

   (iii) When a replacement rod has been fitted, the handbrake operation is checked, see under "Handbrake adjustment".

Handbrake adjustment (Fig. 8)

Adjustment of the rear brakes will automatically adjust the handbrake and when the handbrake operation is correct there is four to six clicks of handbrake lever travel before the rear wheels are fully locked.

When, with the rear brakes correctly adjusted, excessive handbrake lever travel is experienced adjust the length of the handbrake cable as follows:—

1. Chock the front wheels, release the handbrake and jack up the rear of the car.

2. Remove the slackness from the handbrake cable by slackening off the locknut and rotating the threaded sleeve on the end of the handbrake cable clockwise, retighten the locknut.

3. Ensure that the brakes do not bind by rotating each rear wheel by hand.

4. Apply the handbrake, remove the jack and the chocks

BRAKE PEDAL ASSEMBLY

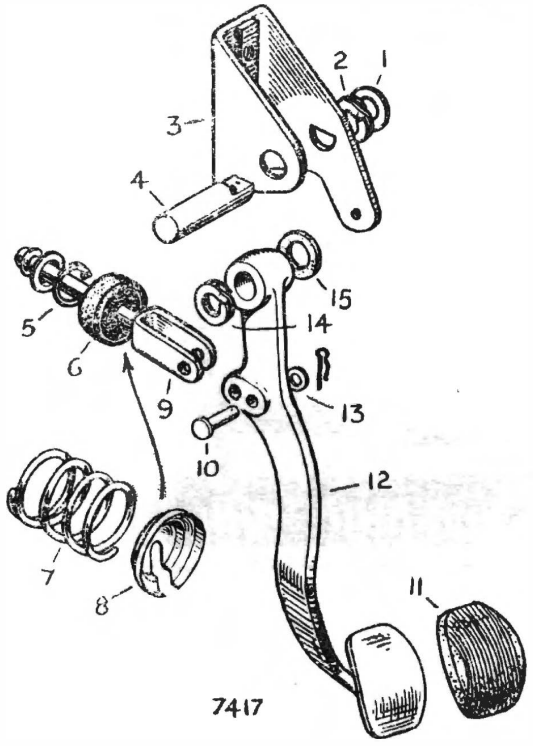

1. PLAIN WASHER
2. SPRING WASHER
3. PEDAL BRACKET
4. PEDAL SHAFT
5. CIRCLIP
6. RUBBER COVER
7. RETURN SPRING
8. CAP
9. PUSH ROD ASSEMBLY
10. CLEVIS PIN
11. PEDAL PAD
12. FOOT PEDAL
13. PLAIN WASHER
14. SPRING WASHER
15. FELT WASHER

Fig. 9. *The pedal assembly*

DESCRIPTION

The pedal assembly is of the pendulum type mounted in an individual bracket attached to the bulkhead inside the car. The master cylinder push rod can be attached to one or the other of the two holes in the pedal lever and this will affect the position of the pedal pad by approximately 1½ in. (4 cm.). The pedal return spring is mounted on the master cylinder push rod between the pedal lever and the bulkhead while the pedal stop is incorporated in the master cylinder.

To remove and refit

1. Identify the position of the clevis pin in the pedal lever and detach the master cylinder push rod from the pedal lever by withdrawing the spring clip from the clevis pin, removing the washer and clevis pin from the forkend.
2. Remove the pedal assembly from inside the car by removing the bolt and washer from the top of the bulkhead inside the engine compartment above the top master cylinder attachment and the top master cylinder nut, washer and bolt.
3. Refitting is the reverse of the removal sequence but particular attention must be given to the following:—
   (i) The pedal lever has two push rod clevis pin holes and the push rod must be returned to its original position.

To dismantle and reassemble (Fig. 9)

1. Withdraw the felt and spring washers from inside the pedal bracket by discarding the split pin and ejecting the pedal shaft and collecting the plain and spring washers from the "D"-shaped end of the shaft.
2. Remove the rubber pad from the pedal when it is seen to be well worn.
3. Reassembly is the reverse of the dismantling sequence but particular attention must be given to the following:—
   (i) The rubber pad is affixed to the pedal lever with a suitable adhesive.
   (ii) The spring and felt washers are positioned one each side of the pedal lever within the bracket.
   (iii) The pedal shaft is fed into the bracket and pedal lever "D"-shaped end first, so the flat on the shaft aligns with the flat in the opposite end of the bracket, to its fullest extent, the spring and plain washers fitted to the "D"-shaped end, use a new split pin.

GIRLING VACUUM SERVO UNIT

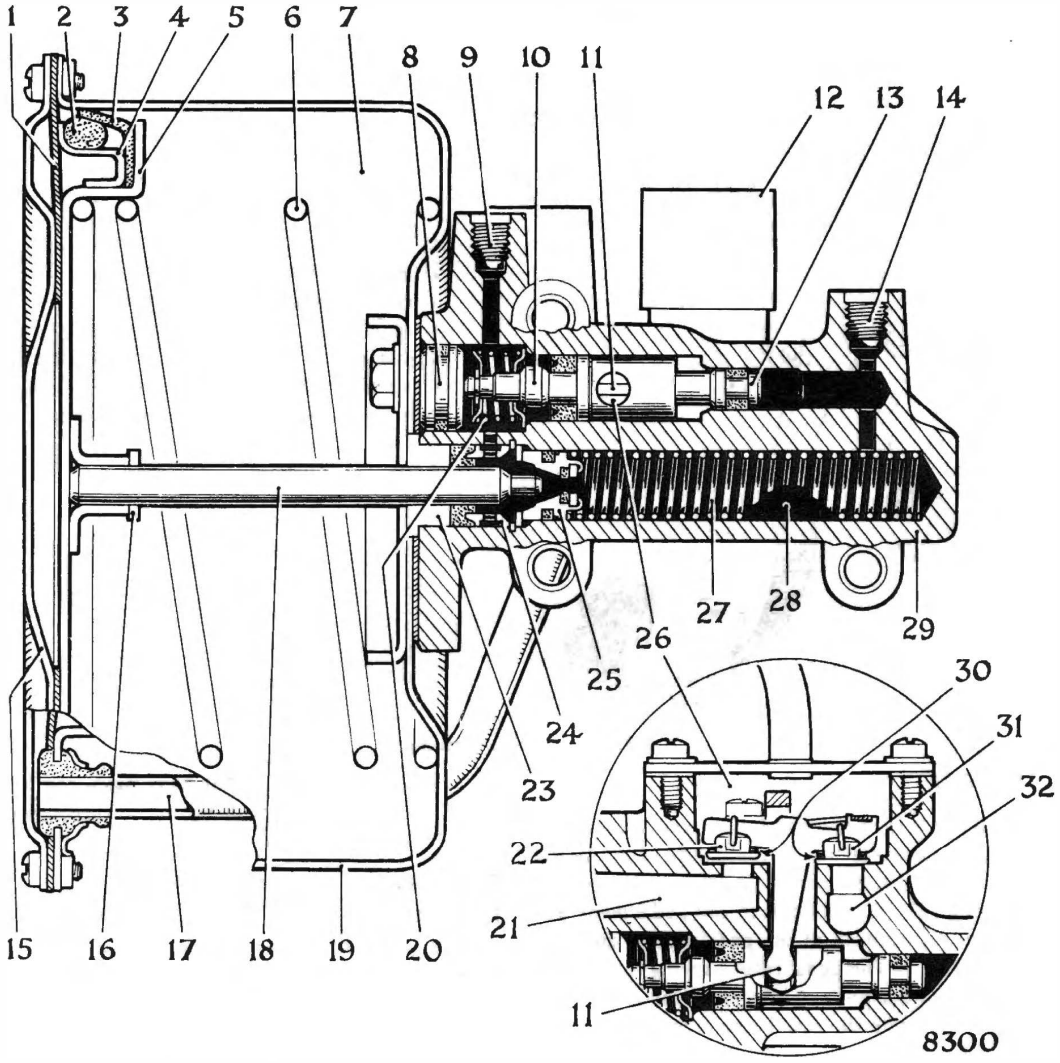

1. END COVER GASKET
2. PISTON BACKING RING
3. PISTON SEAL
4. PISTON SEAL RETAINER
5. PISTON
6. PISTON RETURN SPRING
7. CONSTANT VACUUM
8. END PLUG
9. HYDRAULIC INLET PORT
10. VALVE CONTROL PISTON, LOW PRESSURE END
11. "T" SHAPED LEVER
12. AIR FILTER ASSEMBLY
13. VALVE CONTROL PISTON, HIGH PRESSURE END
14. HYDRAULIC OUTLET PORT
15. END COVER
16. PISTON BUFFER
17. TRANSFER TUBE
18. PISTON ROD
19. VACUUM CYLINDER
20. CONTROL PISTON SPRING
21. VACUUM INLET
22. VACUUM VALVE
23. BEARING BUSH
24. NYLON SPACER
25. OUTPUT PISTON
26. VALVE CHEST
27. OUTPUT PISTON SPRING
28. OUTPUT CYLINDER
29. CAST BODY
30. VALVE SPRINGS
31. AIR VALVE
32. AIR INLET

Fig. 10. *Cross section view of Girling Vacuum Servo Unit*

GIRLING VACUUM SERVO UNIT

DESCRIPTION

The Girling Vacuum Servo Unit is installed in the brake hydraulic system between the master cylinder and the brake assemblies on the road wheels with the master cylinder pressure pipe connected to the vacuum servo unit and the servo hydraulic outlet is connected to the brake assemblies. The force required to augment the driver's effort is obtained by admitting atmospheric pressure to a vacuum cylinder containing a piston.

The pressure difference thus created across the piston produces a thrust load which is used to increase the hydraulic pressure available at the brake assemblies.

In the Girling Vacuum Servo Unit, the piston in the vacuum cylinder is normally subjected to vacuum on both sides and this principle is known as "Suspended Vacuum System". The vacuum is obtained from the inlet manifold of the engine and therefore servo assistance is only available while the engine is running.

Between the engine inlet manifold and the vacuum servo unit is a non-return valve which prevents air or petrol fumes entering the servo unit.

OPERATION (Fig. 10)

When air, at atmospheric pressure, is admitted to the vacuum cylinder (19) by a composite control valve the piston (5) drives the piston rod (18) and the output piston (25) down the hydraulic output cylinder (28) pro-providing a considerable increase of hydraulic pressure to the brake assemblies on the road wheels.

The control valve, operated by hydraulic pressure from the master cylinder, exercises a precise control over the pressure increase and the brakes are applied exactly in proportion to the pressure applied to the foot pedal.

When the servo unit is at rest with no pressure in the hydraulic system, the vacuum valve (22) of the control valve is open and permits vacuum from the inlet manifold to temporarily communicate with the end cover side of the piston (5) in the vacuum cylinder (19) thus vacuum on both sides of the piston (5) is equal.

When pressure is applied to the brake pedal, hydraulic pressure is exerted throughout the braking system and equally on both ends of the valve control piston (10 and 13). As one end of this control piston is larger than the other, an equal pressure per square inch on both its ends causes a proportionally greater thrust to be exerted on the larger end moving the control piston and results in the "Tee"-shaped lever (11) opening the air valve (31) to the atmosphere and closing the vacuum valve (22).

Air is admitted to the end cover side of the piston (5) destroying the temporary vacuum, driving the piston (5) forward.

The piston rod (18) seals the centre hole in the output piston (25) and continued movement applies additional pressure to the hydraulic pressure proceeding to the brake assemblies and also to the small end of the valve control piston (13).

The movement of the output piston (25) continues until the thrust on the small end of the valve control piston (13) by the higher pressure to the brake assemblies, overcomes the thrust on the large end of the control piston (10), by the lower pressure from the master cylinder. The valve control piston (10 and 13) is thus moved back and closes the air valve (31); at this point both valves are closed and the brakes held on.

When the brake pedal is released the lower pressure from the master cylinder is reduced at the large end of the valve control piston (10) which moves back towards its rest position causing the "Tee"-shaped lever (11) to open the vacuum valve (22) drawing the air from the end cover side of the piston (5) in the vacuum cylinder (19), the piston (5) returns to its rest position and with it the output piston (25) relieving the hydraulic pressure in the brake assemblies. The piston rod (18) is withdrawn from the centre hole in the output piston (25) allowing a flow of hydraulic fluid between the brake assemblies and the fluid reservoir of the master cylinder.

If the brake pedal pressure was increased instead of being decreased the control valve operates to give additional assistance until the thrust on each end of the valve control piston is balanced or until the limit of available vacuum is reached. Conversely, if the pedal pressure is only reduced, the control valve operates to reduce the hydraulic pressure in the brake assemblies until, again, a state of balance of the valve control piston is reached.

SERVICING

Whenever possible the Girling Vacuum Servo Unit should be returned to the manufacturers for replacement but if this is not possible the renewing of all seals as contained in the Service Kit should provide a satisfactory unit providing **the internal working surfaces are in good condition.**

There should be no sign of corrosion, pitting, scoring or steps on the piston rod, pistons or bores and the surfaces should be smooth to the touch.

When dismantling, absolute cleanliness is essential. Wash the hands and lay out a clean sheet of paper on which to work and place the parts. Take care of all highly finished working surfaces on pistons, rods and bores. Clean hydraulic parts with Girling Cleaning Fluid or Commercial Methyl Alcohol and do not allow any other fluid, oil or grease to touch them. Special care should be exercised when removing or refitting the circlip in the hydraulic output cylinder and when reassembling the vacuum cylinder to the body.

To remove and refit

1. Remove the flexible vacuum hose from the top of the servo unit by withdrawing the banjo bolt and collecting two sealing washers.
2. Detach the two pressure pipes from the servo unit by releasing the union nuts and trapping any escaping fluid in a drip tray.
3. Detach the band round the vacuum cylinder from the bracket by removing a nut, washer and bolt.
4. Remove the servo unit from the mounting bracket by withdrawing three bolts and washers. No useful puspose is served by removing the brackets.
5. Refitting is the reverse of the removal sequence but particular attention must be given to the following:—
   (i) Check that the two brackets are secure.
   (ii) The vacuum pipe is secured with a new sealing washer each side of the banjo connection.
   (iii) The hydraulic system is bled of air, see under "Bleeding the hydraulic system" before the engine is started.

To dismantle and reassemble

1. Grip the servo unit in a vice by the two lower lugs on the cast body.
2. Remove the piston assembly (5) spring (6) gasket (1) and end cover (15) from the vacuum cylinder (19) by removing the transfer pipe retaining plate and seven nuts and bolts while controlling the pressure of the spring (6).
3. Remove the vacuum cylinder (19) and gasket from the cast body (29) by withdrawing three bolts, washers and a clamping plate and easing the grommet in the flange of the cylinder from the transfer pipe (17).
4. Remove the cover and transfer pipe (17) from the valve chest (26) by withdrawing four screws and washers.
5. Remove the valve retainer and flat horseshoe spring from inside the valve chest (26) by withdrawing two screws.
6. Withdraw the valves (22 and 31) and "Tee"-shaped lever (11) complete from inside the valve chest (26) by applying light pressure to the plug (8) in the end of the control piston bore.
7. Remove the cast body (29) from the vice and withdraw the control piston assembly from the top bore by tapping the mounting flange of the cast body on a wooden block.
8. Dismantle the control piston assembly by compressing the piston spring, easing off the circlip and removing the spring and retainers.
9. Remove the two seals from the control piston and one from the plug (8).
10. Withdraw the piston rod bearing bush (23) from the output piston bore and using a hooked tool remove the gland seal beneath followed by the nylon spacer (24).
11. Mount the cast body vertically in the vice by one of the mounting lugs and fit the compression tool to press the output piston (25) into the bore.
12. Using circlip pliers fully compress the circlip in the bore and carefully lift out the circlip exercising great care not to damage the bore, otherwise a brake failure may result.
13. Release the compression tool when the piston spring (27) will push out the washer followed by the output piston (25) the latter is then discarded.

14. Reassembly is the reverse of the dismantling sequence but particular attention must be given to the following:—

(i) All seals must be renewed and lubricated with Girling Brake Fluid; lubricate the bores and pistons with Girling Red Rubber Grease.

(ii) Fit a new output piston (25) as the piston rod seal can only be fitted during manufacture and confirm that the taper seal has the larger diameter nearer the reduced end of the piston.

(iii) Fit the spring (27) to the output piston (25) feed both into the bore, spring first, followed by the washer and hold in position with the compression tool and clip the tool under the mounting flange of the cast body (29).

(iv) Ensure that the circlip does not foul the side of the cylinder and fits snugly into its groove; this operation must be unhurried and the circlip pliers must be secure in the circlip, for any damage to the cylinder can result in brake failure. Remove the compression tool from the cast body.

(v) Fit the nylon spacer (25) into the bore, large end first, followed by the gland seal, lip end first, and finally fit the bearing bush (23).

(vi) Fit the control piston to the bore so the transverse hole aligns with the hole in the valve chest (26).

(vii) It is unlikely that the two nylon valves (22 and 31) will need renewing but when it is necessary their faces should be lapped on a piece of glass with a fine lapping paste to ensure they are airtight.

Fit the valves (22 and 31) and "Tee"-shaped lever (11) complete so the horsehoe spring location above the air valve (31) is away from the two securing screws inside the valve chest (26). It will be necessary to compress the end plug (8) to locate the end of the "Tee"-shaped lever (11) in the control position.

(viii) Fit a new rubber grommet in the flange of the vacuum cylinder (19) and locate a new gasket on the mounting face of the cast body (29).

(ix) Fit the vacuum cylinder (19) and clamping plate with the centre hole of the cylinder over the protruding bearing bush (23) and transfer pipe (17) ensuring there will be space over the grommet for the passage of air when the end cover (15) is fitted but leave the three bolts slack.

(x) Position the piston (5) and return spring (6) inside the vacuum cylinder (19) and push it down through the full stroke several times to align the bearing bush (23); remove the piston (5) and return spring (6) and tighten the three cylinder attachment bolts taking care not to displace the vacuum cylinder (19) on the flange of the cast body (29). If the cylinder is displaced it can cause the brakes to "hang-on".

(xi) Remove the sponge rubber backing ring (2) from the piston flange and fit the new one from the service kit. Smear the special lubricant, supplied with the kit, on the leather seal (3) of the piston (5).

(xii) Smear the piston rod (18) with Girling Red Rubber Grease and with the return spring in front offer up the assembly to the vacuum cylinder (19).

(xiii) Position the end cover (15) with a new gasket (1) on top of the piston (5) and press down, taking care the piston rod (18) enters the bearing bush (23) without damage.

(xiv) Secure the end cover (15) with the nuts and screws.

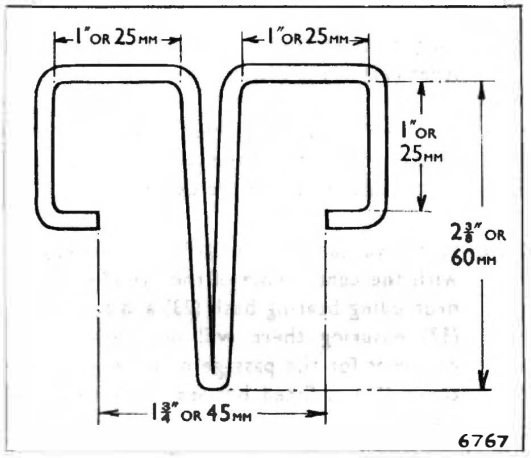

Fig. 11. *The compression tool*

COMPRESSION TOOL (Fig. 11)

The compression tool, necessary to compress the output piston, is made from a 12 in. (30 cm.) length of ⅛ in. (3 mm.) diameter iron wire.

Bend the wire back on itself in the centre to make the middle "leg" of the tool. Follow with the six other bends as shown in the illustration, finally cutting the two ends so there is 1¾ in. (45 mm.) between them.

The centre "leg" is inserted into the output cylinder bore and pressed down until the two ends can be sprung apart and clipped under the mounting flange of the cast body. The tool is then pushed aside towards the control cylinder bore to allow room to insert the circlip pliers.

TESTING EQUIPMENT

To make comprehensive tests, of the vacuum servo unit, requires complex and expensive equipment and this kind of testing is outside the capacity of many Service Workshops. A number of simple tests can be made when the servo unit is installed which gives some useful information and these tests are described hereafter. The only piece of equipment required is a ⅜ in. ×24 U.N.F. pipe union to fit into the hydraulic inlet port.

The use of these tests will assist in diagnoses and will provide assurance after servicing, but the tests are not exhaustive and so cannot equal the standard of the testing which is done in the factory by the specially designed equipment. When a vacuum servo unit gives cause for doubt it is always best to replace it with a factory tested unit whenever possible.

It is assumed that any faults connected with the brake system, such as fluid contamination, lack of adjustment, air in the hydraulic system, fluid leaks, etc., have been recognised and eliminated.

Test 1

1. Fit the servo unit to the mounting bracket and before connecting the air or fluid pipes, fit a bleed screw to the fluid outlet port and the special adaptor to the fluid inlet port.
2. Connect the vacuum pipe from the engine inlet manifold to the adaptor and remove the air filter element.
3. Start the engine and while "ticking over" place the fingers over the air inlet port of the air filter and the vacuum port to determine if there is any suction at either orifice, no suction should be experienced.
4. When suction can be detected, it indicates that the bores are scored or the components incorrectly assembled.
5. Remove the adaptor.

Test 2

1. Connect the vacuum pipe from the inlet manifold to the vacuum port.
2. Connect the fluid inlet and outlet pipes to their respective ports and bleed the hydraulic system of air.
3. Start and run the engine. While the brake is being applied, it should be possible to hear the hiss of the air inlet and with the hand on the vacuum cylinder feel the movement of the piston inside the vacuum cylinder.

Test 3

1. Start and run the engine for half a minute then switch off and leave for two minutes.
2. Apply the brake and the servo unit should operate and the operation should be detected as described in Test 2.

Test 4

Start and run the engine, apply the brake hard and hold it on for fifteen to twenty seconds. There should be no perceptible creep in the brake pedal.

If there is any creep, it indicates leaks or scored bores in the components.

Test 5

1. Jack up the front road wheels.
2. Start and run the engine.
3. Apply the brake and release.
4. The front road wheels should be free to move half a second after the release of the pedal.

Tests 2 to 5 can be used to test a suspect Vacuum Servo Unit before it is removed from the car.

IF THE RESULT IS UNSATISFACTORY ON:—

Test 2. It means the servo unit is not working at all, which could be caused by a lack of vacuum, possibly a faulty non-return valve, or a fault within the servo unit.

Test 3. It indicates leaking gaskets, air valve or rubber grommet. Clamp the vacuum hose and repeat Test 3. If satisfactory, the non-return valve is faulty. To test for a leaking air valve run the engine and place the finger over the air inlet. If the suction is only slight the air valve is satisfactory and the leak is elsewhere.

Test 4. The source of the trouble can only be found by elimination. Check for leaks. If no leak of hydraulic fluid is evident clamp each hose successively and repeat the test each time. Finally plug the master cylinder outlet and test. If creeping of the pedal is evident when the hoses are clamped and the pedal is solid when the master cylinder outlet is plugged, the servo unit is faulty.

Test 5. If the brakes remain on, disconnect the vacuum pipe, operate the brakes to eliminate all the vacuum in the servo unit and repeat the test. If the brakes remain on, the fault is not in the servo unit. If the brakes now release normally, the fault is in the servo unit and the alignment of the piston in the vacuum cylinder is suspect.

VACUUM NON-RETURN VALVE

A vacuum non-return valve is included in the banjo connection situated on top of the servo unit. Since it is not possible to dismantle the non-return valve, in the event of failure it must be renewed.

Its purpose is to preserve the vacuum in the servo unit and to prevent damage to it in the event of an engine backfire.

It consists of a spring-loaded valve which, in normal conditions, will be open due to the vacuum from the engine inlet manifold. When the vacuum from the inlet manifold becomes insufficient to preserve the vacuum in the servo unit, the spring-loaded valve will return to its seat.

To remove and refit

1. Remove the banjo connection and two copper washers from the top of the servo unit by withdrawing the banjo bolt.
2. Withdraw the banjo connection from the flexible hose by slackening off the hose clip.
3. Refitting is the reverse of the removal sequence but particular attention must be given to the following:—
   (i) The two copper washers, one each side of the banjo connection are not omitted.

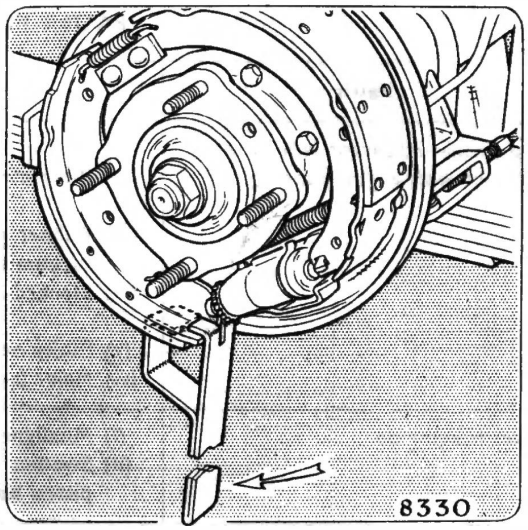

Fig. 12. *The Girling shoe horn applied to the toe end of the trailing brake shoe*

GIRLING SHOE HORN (Fig. 12)

The shoe horn, for the removal and refitting of the brake shoes, is marketed by Messrs. Girling Limited under Part number 64947013.

The shoe horn is applied to the toe end of the trailing brake shoe and levered forward as shown in the illustration to disengage or engage the brake shoe web in the slot of the tappet.

FAULT FINDING CHART

Fault	Cause	Action
Hard pedal—Apparent lack of servo assistance with engine running	(i) Lack of vacuum	(i) Check vacuum connections
	(ii) Restricted hose	(ii) Check hose and renew if necessary
	(iii) Rubber grommet in flange of vacuum cylinder	(iii) Fit new parts from Service Kit
	(iv) Blocked air filter	(iv) Examine air filter element and renew if necessary
	(v) Faulty output piston	(v) Fit new parts from Service Kit
	(vi) Major fault in servo unit	(vi) Fit new servo unit
Brakes hanging on	(i) Misaligned vacuum piston	(i) Check as Test No. 5
	(ii) Swollen rubber grommet or piston backing ring	(ii) Fit new parts from Service Kit
Slow action of servo unit	(i) Swollen rubber grommet in flange of vacuum cylinder	(i) Fit new parts from Service Kit
	(ii) Blocked filter or restricted air inlet	(ii) Examine air filter element and renew as necessary
Lack of servo assistance on heavy braking	Leak in servo vacuum	Check for leaks
Loss of fluid	(i) Failure of seal or seals	(i) Fit new parts from Service Kit
	(ii) Scored bore	(ii) Fit new servo unit

MANUALLY ADJUSTED REAR BRAKES

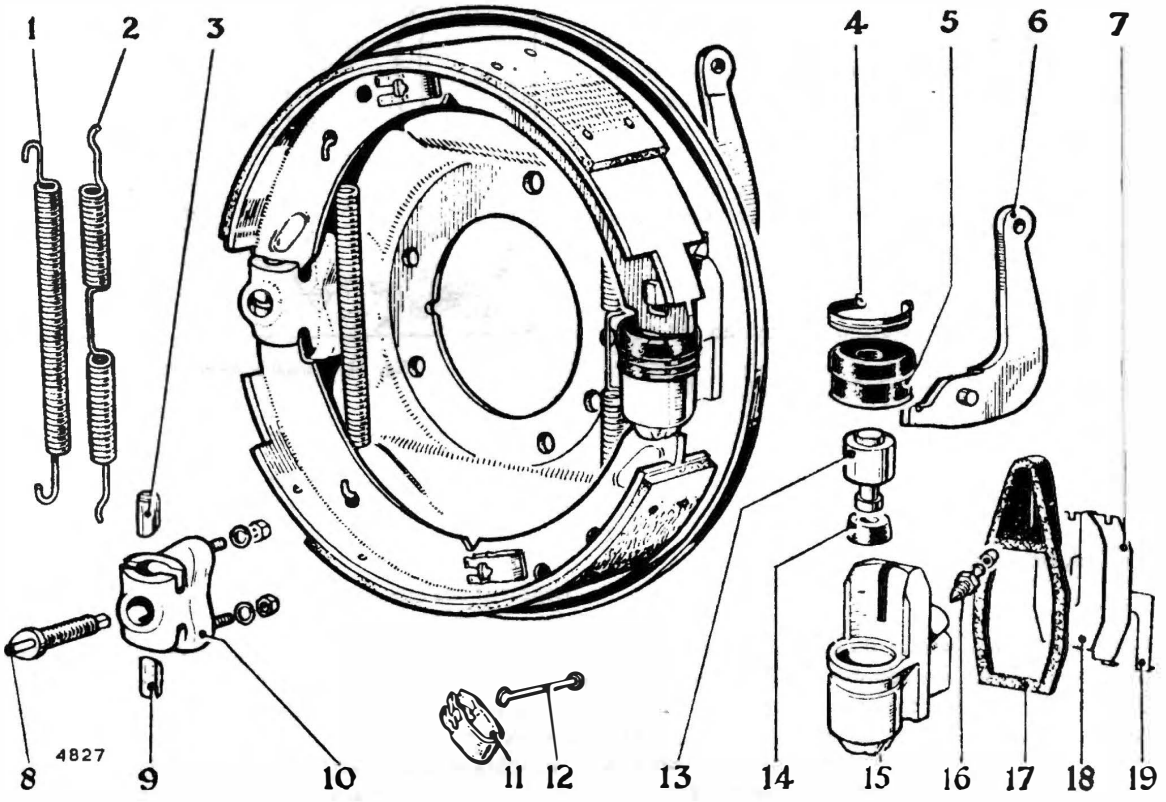

1. RETURN SPRING
2. RETURN SPRING
3. ADJUSTER LINK
4. DUST COVER CLIP
5. DUST COVER
6. HANDBRAKE LEVER
7. RETAINING PLATE
8. WEDGE
9. ADJUSTER LINK
10. ADJUSTER HOUSING
11. LEAF SPRING
12. PEG
13. PISTON
14. SEAL
15. CYLINDER BODY
16. BLEED SCREW
17. DUST COVER
18. SPRING PLATE
19. DISTANCE PIECE

Fig. 13. *Manually adjusted rear brake assembly*

Description

The difference between manually adjusted rear brakes and automatic adjusting rear brakes is in the wheel cylinder assemblies and the adjuster housing which replaces the fixed abutment in the automatic brake. Compare Fig. 13 with Fig. 2 of K2 which shows the automatic adjusting rear brake.

To remove and refit

The manually adjusted rear brake assembly is very similar to the automatic in this respect, see under K2 "Rear drum brakes—To remove and refit", but attention is drawn to the following differences:—

1. The steady post cap of the automatic assembly is replaced by a leaf spring, and removal is similar, depress the spring and turn the post.

2. When the lower brake shoe is removed it is possible that the lower adjuster link may drop out of the housing; this should be retained for reassembly.

3. If required, the adjuster housing may be removed from the backplate; it is retained by two washers and nuts.

After reassembly, brake adjustment is by the procedure outlined below.

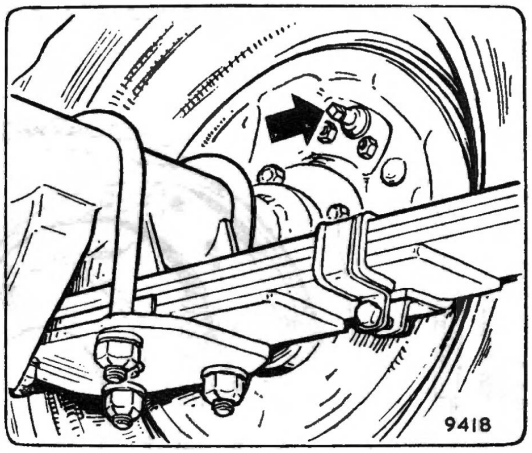

Fig. 14. *Manual brake adjuster*

Brake adjustment

Chock front wheels, release the handbrake and jack up rear wheels. Locate the adjuster at the front inboard face of the backplate (see Fig. 14) and turn adjuster clockwise to lock the shoes up to the drum, i.e. until resistance is felt. Slacken the adjuster until the wheel is free to rotate (usually two clicks) under light hand pressure

Spin the wheel and apply the brakes hard to centralise the shoes in the drum and recheck the adjustment, by the above procedure.

Repeat at the other rear wheel.

Normally, adjustment of the rear brakes will automatically adjust the handbrake, which when correct allows 4 to 6 notches of handbrake movement before the wheels are locked. If handbrake adjustment is not correct, see "Handbrake adjustment", but remember that with manually adjusted rear brakes the brake shoes should be locked up for the actual cable adjustment.

WHEELS AND TYRES

SECTION L

CONTENTS

	Page
CAUSES OF UNEVEN TYRE WEAR	4
CHECKING WHEEL AND TYRE RUN OUT	6
CHOICE OF TYRES	7
MAINTENANCE	3
—Inflation pressures	3
—Repositioning wheels and tyres	3
—Jacking up the car	3
—Uneven tyre wear	3
—Tyre damage	3
—Oil and grease	4
NYLON TYRES	7
PRESSED STEEL WHEEL	5
—Wheel lift and wobble	
—Wheel nuts	5
WEAR CHARACTERISTICS	4
—Incorrect tyre pressure	4
—Front wheel alignment	4
—Excessive wheel camber	4
WHEEL TRIM DISCS	7
—To remove and refit	7
WHEEL AND TYRE BALANCE	7
—Bead indicator	7
WIRE WHEELS	5
—To remove and refit	5
—Wheel nuts	5
—Hubs	6
—Wheel lift and wobble	6
—Spokes	6

WHEELS AND TYRES

MAINTENANCE

Maintenance checks will be required at regular intervals as given in the "Owner's Handbook" and "Owner's Service Book" and will include the following:—

(i) Checking tyre pressures.

(ii) Checking the security of the wheel nuts.

(iii) Checking for loose spokes (Wire wheels only).

(iv) Checking the wheels and tyres for damage and abnormal tread wear.

(v) Changing the position of the roadwheels.

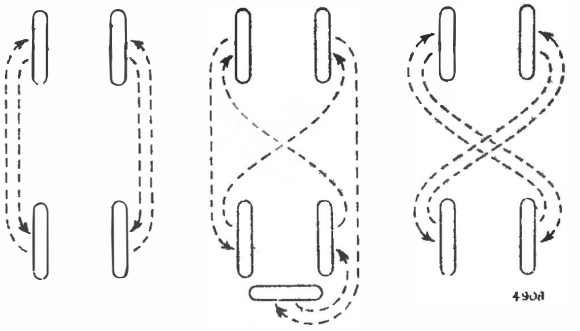

Fig. 1. *Three different methods of interchanging the wheels and tyres to even up tyre wear.*

Inflation pressures

Tyres must be examined at least once a week for loss of pressure. Pressures must be checked when the tyres are cold, such as after standing overnight, and not when they have attained normal running temperatures. Do not over-inflate, and do not reduce pressures which have increased owing to increased temperature.

The correct inflation pressures are given in the General Data Section.

Repositioning wheels and tyres (Fig. 1)

Wheels and tyres must be interchanged at regular intervals.

Diagonal interchanging between left-hand front and right-hand rear and between right-hand front and left-hand rear provides the most satisfactory first change because it reverses the directions of rotation. Subsequent interchanging of front and rear tyres should be as indicated by their appearance with the object of keeping the wear on all the treads even and uniform.

Jacking up the car

When removing the roadwheels it is recommended that the jack supplied with the car is used. At the front or rear, the extension of the jack is fitted into the square sectioned recess just beneath either bumper.

When a trolley jack is used, jack up the rear of the car by positioning the jack head beneath the rear axle casing.

Jack up the front of the car by positioning the jack head and a 2 ft. (61 cm) long wooden beam across the car beneath the front suspension cross member.

Uneven tyre wear

All tyres must be examined for uneven wear, the cause determined and eliminated.

Tyre damage

Tyres must be examined for small objects embedded in the tread rubber, such as flints and nails; also for cuts and penetrations, and for damage due to impacts with kerbs, etc.

Minor injuries confined to tread rubber, such as from small pieces of glass or road dressing material, require no attention other than the removal of the objects.

More severe tread injuries and wall rubber damage require vulcanised repairs.

Injuries which extend into or through the fabric, except clean nail holes, seriously weaken the tyre. Satisfactory repair necessitates new fabric being built in and vulcanised. This requires expensive plant equipment and should be undertaken by a tyre repair specialist or by the tyre manufacturer.

Oil and grease

Oil and grease must be removed by using petrol sparingly. If oil or grease on the tyres results from over-lubrication or defective sealing, suitable corrective action must be taken.

CAUSES OF UNEVEN TYRE WEAR

The causes of uneven tyre wear are often difficult to diagnose individually; it is advisable, in such cases, to check all the following points:—

(*a*) Tyre pressures (see "General Data Section").

(*b*) Brake freedom and balance, brake pad and shoe settings, disc and drum condition (see Section K).

(c) Front wheel alignment (see Section F).

(*d*) Front wheel camber angles (see Section F).

(e) Endfloat in hub bearings (see Section F).

(*f*) Wear in steering joints (see Sections F and J).

(*g*) Wheel lift and wobble. On a truly mounted and revolving wheel the difference between the high and low points measured at any location on either tyre seat (Fig. 2 at "A") should not exceed ·050 in. (1·0 mm.). The lateral variation measured on the vertical inside face of the flange (Fig. 2 at "B") should not exceed ·050 in. (1·0 mm.). The positions "C" and "D" may be used when the tyre is mounted on the rim.

(*h*) Balance of the wheel and tyre assemblies. The wheels and tyres must be checked for both static and dynamic balance (see under "Tyre and Wheel Balance").

(*i*) Condition of road springs and shock absorbers (see Sections F and H).

(*j*) Irregular wear may be caused, in addition, by the local road conditions, such as from a combination of steep camber, abrasive surfaces and frequent hills and bends. Driving methods may also be involved; thus with all the above points properly checked, uneven wear may still be experienced. The only solution in such cases is to regularly reposition the wheels and tyres as described under "Repositioning wheels and tyres".

WEAR CHARACTERISTICS

Certain faults which cause uneven tyre wear produce easily recognisable wear characteristics. With knowledge of these characteristics, the fault may often be quickly diagnosed and the rectification procedure considerably reduced.

Incorrect tyre pressure

Tyre distortion due to persistent under-inflation causes rapid wear on the shoulders and leaves the centre standing proud. Over-inflation has the opposite effect, *i.e.*, excessive wear on the centre tread leaving the shoulders standing proud.

Front wheel alignment

Front wheel alignment has a marked effect on tyre wear and in extreme instances can cause "feathering" on the edge of each pattern rib.

On right-hand drive cars, "feathering" on the inside edges of the pattern ribs, nearest to the car centre line and in particular on the left-hand side tyre, indicates excessive toe-in. "Feathers" on the outside edges of the pattern ribs, furthest from the car centre line and in particular the right-hand side tyre indicates excessive toe-out.

On left-hand drive cars, the condition is reversed. "Feathers" on the inside edges of the pattern rib, nearest the car centre line and in particular the right-hand side wheel indicates excessive toe-in. "Feathers" on the outside of the pattern tread, furthest from the car centre line and in particular the left-hand side tyre, indicates excessive toe-out.

Excessive wheel camber

Excessive wheel and road camber causes rapid and one side tread wear. When a check of the mechanical factors reveals nothing abnormal, interchange the front wheels diagonally with the rear wheels, see under "Repositioning wheels and tyres".

PRESSED STEEL DISC WHEELS

Wheel lift and wobble (Fig. 2)

On a freely mounted and revolving wheel the difference between the high and low points (lift) measured on either tyre seat "A" must not exceed ·050 in. (1·0 mm.). The lateral variation (wobble) measured on the vertical inside face of the flange "B" must not exceed ·050 in. (1·0 mm.). The positions "C" and "D" can be used when the tyre is mounted, but in this instance consideration must be given to any varying paint thicknesses.

Lift and wobble greater than that specified will produce persistent unbalance and irregular tyre wear.

It is impractical to correct lift and wobble when found in pressed steel wheels.

Fig. 2. *Rim lift and wobble. "A" and "B" indicate the check points to be used on the rim but points "C" and "D" can be used when the tyre is mounted.*

Wheel nuts

All wheel nuts of the pressed steel wheel have right-hand threads and must be free on their studs with the conical face of the nut mating with the seat in the wheel disc.

Initially "nip" up the nuts and fully tighten by diagonal or alternate selection with the weight of the car on the roadwheels.

Wheel discs having damaged or elongated stud holes, which result from slack wheel nuts, must be renewed.

5. Refitting is the reverse of the removal sequence but particular attention must be given to the following:—

   (i) Clean the inside of the hub shell of all dirt and corrosion.

   (ii) Ensure that the rubber ring at the small end of the taper is in good condition.

   (iii) Smear the taper and splines of both the hub and hub shell with Shell Retinax "A" Grease.

   (iv) The right-hand wheel nuts have a left-hand thread and the left-hand wheel nuts have a right-hand thread, fully tighten the wheel nut with the weight of the car on the roadwheels.

   (v) Check the security of the wheel nuts after a short mileage as slack wheel nuts will ruin the splines of the hub and hub shell.

WIRE WHEELS (Centre lock)

To remove and refit

1. Slacken off the right-hand wheel nuts clockwise and the left-hand wheel nuts anti-clockwise by knocking the lugs with a mallet; alternatively, by applying the special spanner to the wheel nut and knocking the special spanner with a mallet.

2. Jack up the car and remove the slackened-off hub cap.

3. Draw the wheel off the hub by gripping the tyre with both hands.

4. Clean the hub of all dirt and corrosion.

Wheel nuts

Two types of wheel nuts are used:—

(i) The lug or winged type.

(ii) The plain type with eight flats and a special spanner is supplied with the car.

The thread of the wheel nut is handed and the outside face is marked to indicate the rotation necessary to remove the wheel nut.

It is imperative that the wheel nuts are fully tightened otherwise the splines of the hub and hub shell will sustain irrepairable damage.

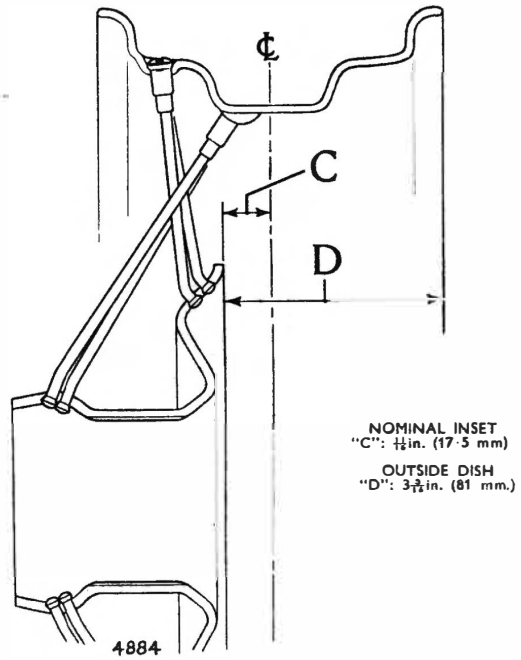

Fig. 3 *Wire wheel alignment—rim to hub*

Hubs

The hub for the wire wheel has a tapered face, parallel splines, and a handed thread for the wheel nut and at the small end of the taper is a groove to accommodate a rubber ring which prevents the ingress of corrosion to the splined and threaded section of the hub.

Wheel lift and wobble (Fig 2)

On a freely mounted and revolving wheel the difference between the high and low points (lift) measured on either tyre seat "A" must not exceed ·050 in. (1·0 mm.).

The lateral variation (wobble) measured on the vertical inside face of the flange "B" must not exceed ·050 in. (1·0 mm.). The position "C" and "D" can be used when the tyre is mounted, but in this instance consideration must be given to any varying paint thicknesses.

Lift and wobble greater than that specified will produce persistent unbalance and irregular tyre wear.

Lift and wobble can be corrected by retrueing the wire wheel but this work must be effected by a competent mechanic who specialises in wheel building.

Spokes (Fig. 3)

The spokes are tightened to a predetermined tension and provides the desired amount of flexibility which is an inherent feature of the wire wheel and it is important that this spoke tension is maintained.

Slack or damaged spokes must be tightened or renewed but care must be taken to ensure that the hub inset and the dishing of the rim remains unaltered.

Spoke tightening is best effected with the tyre and tube removed from the rim, so that any protruding spoke can be filed off flush to its nipple.

When the condition of the wire wheel is in doubt or when extensive spoke tightening or respoking is required, it is recommended that the work is effected by a competent mechanic who specialises in wheel building.

CHECKING WHEEL AND TYRE RUN-OUT

When preparing the car for a suspension or steering check, the wheels and tyres must be checked first for "run-out".

During the suspension or steering checks, the points of "run-out" are positioned well away from the contact points of any gauges that may be in use.

1. Jack up the wheel to be checked for "run-out".
2. Spin the wheel while holding a piece of chalk close to the wall of the tyre.
3. Move the chalk progressively nearer the tyre until it makes contact with any "run-out".
4. Mark the centres of the "run-out" with a cross.
5. Lower the car to the ground but before making any suspension or steering checks, roll the car forwards and backwards to position the wheels in their normal running attitude.

CHOICE OF TYRES

Only the tyres fitted as original equipment must be used as replacements.

However, should it become necessary to fit special purpose tyres because the car is being used for specific work, such as high speed or cross country motoring, careful thought concerning their choice cannot be over-emphasized.

As these tyres sometimes alter the ride and the characteristics of the car, it is recommended that the Technical Department of the tyre manufacturer is consulted to ensure that the most suitable tyres are chosen.

NYLON TYRES

Nylon tyres may develop temporary flatting after standing for some time and cooling off, following a long run during which high temperatures have been reached.

These flat spots can be run out quite quickly but it may be necessary to approach the speeds and temperatures which have led to the flatting. For example, flats on tyres which have developed after a long fast run may be difficult to remove if the car is then used for local "pottering" especially if the weather has become colder and wetter. Before balancing nylon tyres it is desirable to ensure that these flats have been fully run out, otherwise a false balance may be obtained.

WHEEL AND TYRE BALANCE

In the interests of smooth riding, precise steering and high stability, all tyres are balance checked to predetermined limits. Coloured spots may be found on one bead indicating the lightest part of the tyre, which must be fitted near to the valve.

Where balance weights have been fitted to the wheels, it is advisable to detach them before tyre removal to avoid the possibility of their inadvertently falling inside the tyre. When the same tyre is to be refitted, the positions and amounts of these balance weights as well as the position of the tyre on the wheel should be marked with chalk on the wheel, so that their subsequent replacement may restore the original balance as far as possible.

The original degree of balance is not necessarily maintained in service, as it may be affected by uneven tread wear, by repairs, or by tyre removal and replacement. Normal wear of moving parts may also render the car more sensitive to unbalance.

Rebalancing of tyre and wheel assemblies should be carried out with the aid of approved equipment capable of measuring both static and dynamic balance.

When cars are fitted with Dunlop "SP" or radial ply tyres, the roadwheels must be rebalanced every 10,000 miles (16,000 kms.) or every 5,000 miles (8,000 kms.) when operated for continuous high speed driving.

Bead indicator

A bead indicator is moulded into the wall of the tyre adjacent to the wire beads to facilitate the centring of the tyre on to the rim.

WHEEL TRIM DISCS

A wheel trim disc is fitted to each of the four roadwheels and therefor must be removed from one wheel before the spare wheel is fitted. The wheel trim disc has a hole for the tyre valve and is held in position by the nave plate.

To remove and refit

1. Remove the nave plate from the roadwheel.
2. Ease the wheel trim disc from the nave plate studs.
3. Refitting is the reverse of the removal.

ELECTRICAL EQUIPMENT

SECTION N

CONTENTS

	Page
ALTERNATOR—LUCAS 10AC	19
—Description	19
—Maintenance	20
—Testing in position	20
—Testing field isolating relay	21
—Servicing	21
ALTERNATOR CONTROL—LUCAS 4TR	27
—Description	27
—Operation	27
—Servicing	30
BATTERY	3
—General	3
—Maintenance	3
—Recharging from an external supply	5
—Preparing new batteries for service	5
CONTROL BOX—LUCAS RB340	14
—Description	14
—Operation	15
—Testing and adjusting	15
ELECTRICAL SYSTEM	3
FAULT FINDING CHARTS	52
FUSE UNIT	18
GENERATOR—LUCAS C40-1	7
—Description	7
—Routine maintenance	7
—Testing	7
—Servicing	8
HORNS	46
—Lucas Windtone horn—9H model	46
—Clear hooter horn—F725 model	47
IGNITION SYSTEM	See Section B

CONTENTS—continued

	Page
INSTRUMENTS	51
—Fuel and temperature indicators	51
LIGHTING AND INDICATOR SYSTEM	38
—Headlamps	38
—Side lamps and front flasher bulbs	42
—Stop, tail and rear flasher lamps	42
—Direction indicator and headlamp flasher	44
STARTER MOTOR—LUCAS M35G	32
—Description	32
—Maintenance	32
—Testing	32
—Servicing	34
—Starter drive	37
WINDSCREEN WIPERS	48
—6WA wiper	48
—DR3A wiper	50
—Wiper arms and blades	50
—Combined wiper switch and washer control	50

ELECTRICAL SYSTEM

DESCRIPTION

The electrical system is a 12 volt earth return type employing NEGATIVE earth polarity. The system incorporates the charging, lighting, starter, ignition and auxiliary circuits, the operational principles of these circuits being basically similar for all models, except for the charging circuit which may employ a D.C. Generator (Dynamo) or Alternator Equipment.

Servicing equipment

It is important to note that the servicing of the system cannot be carried out satisfactorily unless the equipment recommended is available. Further, it will be seen that special equipment is needed for dismantling and reassembling some units of the system, *and should this equipment not be available, dismantling must not be attempted.*

We recommend the Avo Model 12 testing equipment (obtainable from Avo Ltd., 92–96 Vauxhall Bridge Road, London, S.W.1) which has been specially designed for automotive use and enables a wide range of checking operations to be carried out with a single instrument.

ALTERNATOR SYSTEM

This system is fitted to certain models in the Light Car Range and requires extreme caution when servicing. It is strongly emphasised that because of the sensitive nature of the electronics in the system, three basic requirements must be fulfilled before the persons responsible, undertake the servicing of the equipment.

These requirements are as follows:—

1. A methodical approach.
2. Full knowledge of the charging circuit.
3. An understanding of the necessary precautions.

A wiring diagram (Fig. 20a) shows the associated circuit connections and units employed in the system. This should be used in conjunction with the alternator diagnosis chart included later in this Section.

The list of servicing precautions contained in subsequent paragraphs for the alternator must be strictly observed.

BATTERY

GENERAL

The battery is of the "clean-top" pattern, having submerged intercell connectors to minimise the risk of corrosion. Diecast cable connectors are fitted, retained with screws.

Batteries are supplied either filled and charged, unfilled and uncharged, or "dry-charged", that is with the cells in a charged condition and without electrolyte. Details of preparing unfilled, uncharged and "dry-charged" batteries are given in later paragraphs.

MAINTENANCE

Battery maintenance consists mainly of regular inspection and servicing.

1. Keep the battery and its surroundings clean and dry. Give particular attention to the top of the battery to prevent electrical leakage between the terminals.
2. Remove the vent plugs, and see that the vent holes are clear.
3. Check the electrolyte level and top up, when necessary. The correct level is just up to the perforated splash guard. Do not over-fill or acid will

escape through the vent hole with detrimental effect to the connections and adjacent parts of the car.

The use of a Lucas Battery Filler will be found helpful in this topping-up process, as it ensures that the correct electrolyte level is automatically obtained and also prevents distilled water from being spilled over the top of the battery.

Distilled water should always be used for topping-up. In an emergency, however, drinking water, clean rainwater or melted snow may be used. The following waters must not be used: salt water, chlorinated water, chemically softened water or stagnant water.

Never use a naked light when examining a battery, as the mixture of oxygen and hydrogen given off by the battery when on charge, and to a lesser extent when standing idle, can be dangerously explosive.

If a battery is found to need an excessive amount of topping-up, the cause should be sought. If an excessive charge is suspected, check the regulator setting. If one cell in particular is at fault, examine the container for cracks.

Never transfer electrolyte from one cell to another.

4. With the diecast type of connector no corrosion difficulties arise. When fitting the connectors to the battery, first smear the inside of the tapered hole of the connector with silicone grease and push on the connector by hand.

   Insert the self-tapping screw and tighten with medium pressure only; fill in the recess around the screw head with more silicone grease. If the connectors are fitted dry, and driven home with too much force, they may be difficult to remove at a later date.

5. Examine the earth connection to ensure that it is clean and free from rust or corrosion.

6. Measure the specific gravity of the electrolyte in each cell in turn, with a hydrometer. The reading given by each cell should be approximately the same; if one cell differs appreciably from the others, an internal fault in the cell is indicated. This will probably be confirmed by the heavy discharge test described later.

The appearance of the electrolyte drawn into the hydrometer when taking a reading gives a useful indication of the state of the plates; if it is very dirty, or contains small particles in suspension, it is possible that the plates are in a bad condition.

Check the specific gravity of the electrolyte (Refer to Fig. 1) as an indication of the state of charge of the battery, using a hydrometer.

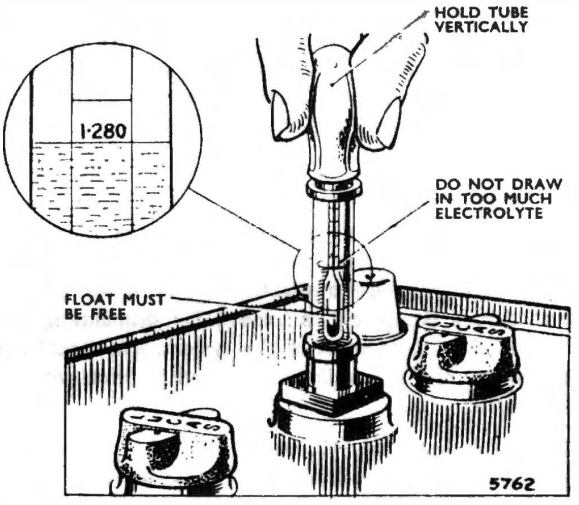

Fig. 1. *Taking hydrometer readings. Take readings at eye level*

The specific gravities and their indications are as follows:—

Climate ordinarily below 26·7°C. (80°F.)	
Cell fully charged	1·270—1·290
Cell half charged	1·190—1·210
Cell fully discharged	1·110—1·130
Climate ordinarily above 26·7°C. (80°F.)	
Cell fully charged	1·210—1·230
Cell half charged	1·130—1·150
Cell fully discharged	1·050—1·070

The specific gravity of electrolyte varies with its temperature. The figures quoted are for an electrolyte temperature of 15·6°C. (60°F.). If the electrolyte temperature is above 15·6°C. (60°F.) add ·002

to the hydrometer reading for each 2·8°C. (5°F.) rise to obtain true specific gravity. Similarly ·002 must be deducted from the hydrometer reading for each 2·8°C. (5°F.) below 15·6°C. (60°F.).

If the level of the electrolyte is so low that a hydrometer reading cannot be taken, no attempt should be made to take a reading after adding distilled water until the battery has been on charge for at least thirty minutes. *NEVER transfer the electrolyte from one cell to another.*

If the car is out of use for any length of time the battery should not be allowed to run down or to remain in a discharged condition. It should be re-charged about every fortnight from an independent electric supply.

7. Heavy discharge test

A heavy discharge tester consists of a centre-zero voltmeter, 2 or 3 volts full scale, across which is connected a shunt resistance capable of carrying the current involved. Pointed prongs are provided for making contact with the inter-cell connectors.

Pierce the indentations in the battery top with a heated, pointed tool and press the contact prongs against the exposed positive and negative terminals of each cell. A good cell will maintain a reading of 1·2—1·5 volts, depending on the state of the charge, for at least 10 seconds. If, however, the reading rapidly falls, the cell is probably faulty and a new plate assembly may have to be fitted.

Remember that if the battery is subjected to heavy loads (*i.e.*, long periods of night parking with lights on) without suitable opportunities for recharging, a low state of charge is only to be expected. A fault in the charging system, or neglect during a period out of commission, may also be responsible for any trouble.

RECHARGING FROM AN EXTERNAL SUPPLY

If tests indicate that the battery is discharged, but is otherwise in good condition, it should be re-charged, either on the vehicle by a period of daytime running or on the bench from an external supply. If the latter, the battery should be charged until the specific gravity and voltage show no increase over three successive hourly readings. During the charge the electrolyte must be kept level with the top of the separator guard by the addition of distilled water. Re-charge rates are as follows:—

BT 7A Batteries (38 ampere-hour)	4 amps.
BV11A Batteries (51 ampere-hour)	5 amps.

Do not allow the temperature of the electrolyte to exceed the maximum permissible temperature during charging, *i.e.*

Climates below 26·7°C. (80°F.)	37·8°C. (100°F.)
Climates above 26·7°C. (80°F.)	48·9°C. (120°F.)

A battery in which all cells show a general falling off in efficiency will often respond to the process known as "cycling". This process consists of fully charging the battery as described earlier, and then discharging it by connecting to a lamp board, or other load, at the same rate. The battery should be capable of providing this current for at least 7 hours before it is fully discharged, as indicated by the voltage of each cell falling to 1·8. If the battery discharges in a shorter time, repeat the "cycle" of charge and discharge.

PREPARING NEW BATTERIES FOR SERVICE

Batteries for the home market are normally supplied dry and uncharged; in this event the instructions in paragraphs (*a*) should be followed.

Batteries for export markets are supplied "dry-charged". Before fitting to the vehicle the battery must be filled with acid as described in paragraphs (*b*); no initial charging is necessary, although, if time permits a short freshening charge is advantageous.

Preparation of electrolyte

Electrolyte of the specific gravity stated in the following table, is prepared by mixing distilled water and concentrated sulphuric acid, usually of 1·840 specific gravity.

The mixing must be carried out either in a lead-lined tank or in suitable glass or earthenware vessels. Slowly add the acid to the water, stirring with a glass rod. Never add the water to the acid as the resulting chemical reaction causes violent and dangerous spurting of the concentrated acid. The approximate proportions of acid and water are indicated in the following table:—

Climates normally below 27°C. (80°F.)

Add one part (by volume) of acid of 1·840 specific gravity to 3·2 parts (by volume) of pure distilled water to obtain a final specific gravity of 1·260 at 15·5°C. (60°F.) acid temperature.

Climates normally above 27°C. (80°F.)

Add one part (by volume) of acid of 1·840 specific gravity to 4·3 parts (by volume) of pure distilled water to obtain a final specific gravity of 1·210 at 15·5°C. (60°F.) acid temperature.

Heat is produced by the mixture of acid and water, and the electrolyte should be allowed to cool before taking hydrometer readings—unless a thermometer is used to measure the actual temperature, and a correction applied to the reading as previously described—and before pouring the electrolyte into the battery. The total volume of electrolyte required is 4½ pints (2·66 litres) for BT 7A batteries and 7½ pints (4·3 litres) for BV 11A batteries.

(*a*) UNCHARGED BATTERIES

Filling the cells

The temperature of the acid, battery and filling-in room must not be below 0°C. (32°F.). Carefully break the seals in the filling holes and half fill each cell with electrolyte of the appropriate specific gravity. Allow the battery to stand for at least six hours, in order to dissipate the heat generated by the chemical action of the acid on the plates and separators, and then add sufficient electrolyte to fill each cell to the top of the separator guard. Allow to stand for a further two hours and then proceed with the initial charge.

Initial charge

The initial charging rate is 2·5 amperes for BT7A batteries and 3·5 amperes for BV11A batteries. Charge at this rate until the voltage and specific gravity readings show no increase over five successive hourly readings. This will take from 40 to 80 hours, depending on the length of time the battery has been stored before charging.

Keep the current constant by varying the series resistance of the circuit, or the generator output. This charge should not be broken by long rest periods. If, however, the temperature of any cell rises above the permissible maximum 37·8°C. (100°F.) for batteries filled with 1·260 S.G. acid, 48·9°C. (120°F.) for batteries filled with 1·210 S.G. acid, the charge must be interrupted until the temperature has fallen at least 10°F. below that figure. Throughout the charge the electrolyte must be kept level with the tops of the separators by the addition of more acid, as required.

At the end of the charge carefully check the specific gravity in each cell to ensure that, when corrected to 15·6°C. (60°F.), it lies within the specific limits. If any cell requires adjustment, some of the electrolyte must be syphoned off and replaced either by distilled water or by acid of the strength originally used for filling-in, depending on whether the specific gravity is too high or too low.

Continue the charge for an hour or so to ensure adequate mixing of the electrolyte and again check the specific gravity readings. If necessary, repeat the adjustment process until the desired reading is obtained in each cell. Finally, allow the battery to cool and syphon off any electrolyte above the tops of the separators.

(*b*) "DRY-CHARGED" BATTERIES

Electrolyte of the appropriate specific gravity, either 1·260 or 1·210, is prepared as previously described.

Filling the cells

Whilst these batteries leave the factory in the fully "dry-charged" condition, they may slowly lose some charge in storage. In view of this, the following filling instructions must be carefully observed:—

With the acid, battery and room temperature between 15·5—37·7°C. (60—100°F.), remove the vent plugs and fill (in one operation) each cell to the separator guard or, when applicable, to the coloured marker line.

Measure the temperature and specific gravity of the electrolyte in each of the cells. Allow to stand for 20 minutes and then re-check the specific gravity and temperature of the electrolyte in each cell.

The battery is then ready for service, *unless* the above checks show the electrolyte temperature to have risen by more than 5·5°C. (10°F.), or the specific gravity to have fallen by more than 10 "points" (·010 S.G.).

In this event, it will be necessary to re-charge the battery at the appropriate re-charge rate until the specific gravity values remain constant for three successive hourly readings and all cells are gassing freely.

During charging, keep the electrolyte in each cell level with the separator guard by adding distilled water—not acid.

GENERATOR

Lucas C40-1

DESCRIPTION

The generator is a shunt-wound, two-pole, two-brush machine, arranged to work in conjunction with a Lucas regulator unit. A fan, integral with the driving pulley, draws cooling air through the generator, inlet and outlet holes being provided in the end brackets of the unit.

The armature is supported at the drive end by a ball race bearing, and at the commutator end by a porous bronze bush.

ROUTINE MAINTENANCE

Lubrication

Every 6,000 miles or every six months, whichever occurs first, inject a few drops of Shell X–100, 30 engine oil into the hole marked "OIL" at the end of the commutator bearing housing (see Fig. 2). A felt ring located in the housing will absorb the oil and act as a reservoir.

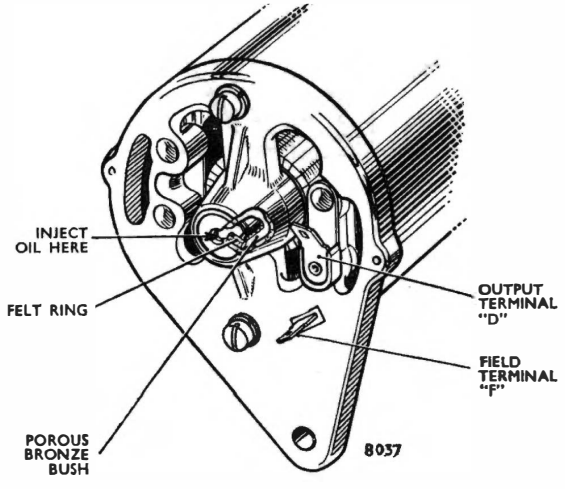

Fig. 2. *Generator lubrication and terminal connections*

Inspection of brushgear

Every 24,000 miles, the generator should be removed from the engine and the brushgear be inspected in the manner described in later paragraphs under Servicing.

Belt adjustment

Inspect the driving belt occasionally and, if necessary, adjust the tension by following the procedure described in Section "B". The machine must be properly aligned following an adjustment, otherwise undue strain will be thrown on the generator bearings.

PERFORMANCE DATA

The figures covering the design and performance of the generator are given in General Data, to which reference should be made when carrying out any test.

TESTING

In the event of charging trouble, the following testing procedure should be adopted to determine if the generator is charging and is servicable. If the tests prove that the generator is in good condition, the fault is in the charging circuit or control box.

1. Inspect the driving belt, and adjust if necessary in the manner described in Section "B".

2. Check the terminal connections on the commutator end bracket. The larger connector carries the generator main ouput, and the smaller connector carries the field current (see Fig. 2).

3. Switch off all lights and accessories, pull off the connectors from the terminal blades of the generator, and link the two blades with a short length of wire.

4. Start the engine and set it to run at the normal idling speed.

5. Clip the positive lead of a moving coil voltmeter calibrated 0 to 20 volts, to one generator terminal, and the negative lead to a good earthing point on the generator.

6. Gradually increase the engine speed, when the voltmeter reading should rise rapidly and without fluctuation. Do not allow the voltmeter reading to reach 20 volts and do not race the engine in an attempt to increase the voltage. It is sufficient to run the generator up to a speed of 1,000 r.p.m. If the voltage does not rise rapidly and without fluctuation, the unit must be dismantled for internal examination.

Excessive sparking at the commutator in the above test indicates a defective armature which should be renewed.

If a radio suppression capacitor is fitted between the output terminal and earth, disconnect this capacitor and retest the generator before dismantling. If a reading is now given on the voltmeter, the capacitor is defective and must be renewed.

If the tests show that the generator is in good condition, remove the link from between the terminals and restore the original connections.

SERVICING (See Fig. 3)

To dismantle

1. Remove the driving pulley and shaft key.

2. Unscrew and withdraw the two through bolts.

3. Withdraw the commutator end bracket from the yoke.

4. Lift the driving end bracket and armature assembly. from the yoke. Take care not to lose the fibre thrust washer (if fitted) from the commutator end of the shaft.

5. The driving end bracket, which on removal from the yoke has withdrawn with it the armature and armature shaft ball-bearing, need not be separated from the shaft unless the bearing is suspected and requires examination, or the armature is to be tested or renewed. In any of these events the armature should be removed from the end bracket by means of a hand press.

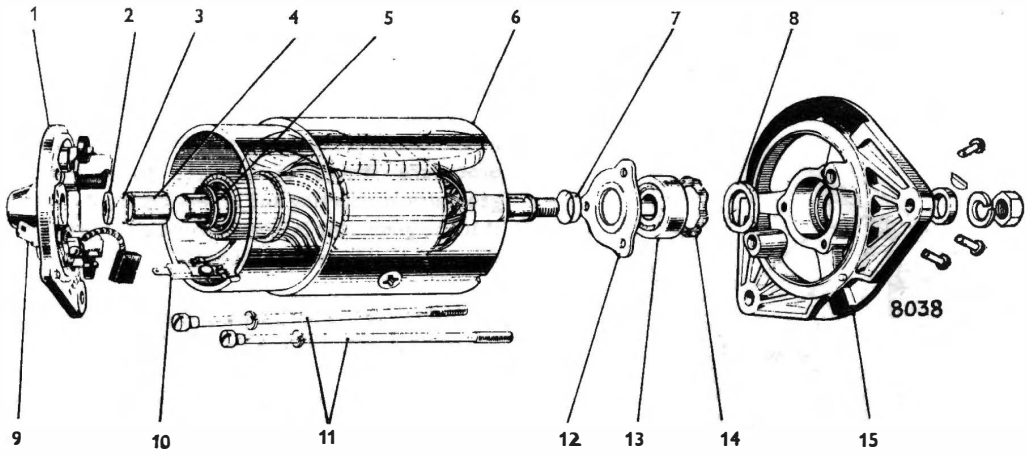

1. COMMUTATOR END BRACKET
2. FELT RING
3. FELT RING RETAINER
4. BRONZE BUSH
5. FIBRE WASHER
6. YOKE
7. RETAINING CUP
8. FELT RING
9. TERMINAL "D"
10. TERMINAL "F"
11. THROUGH BOLTS
12. BEARING RETAINER
13. DRIVING END BEARING
14. CORRUGATED WASHER
15. DRIVING END BRACKET

Fig. 3. *Exploded view of generator*

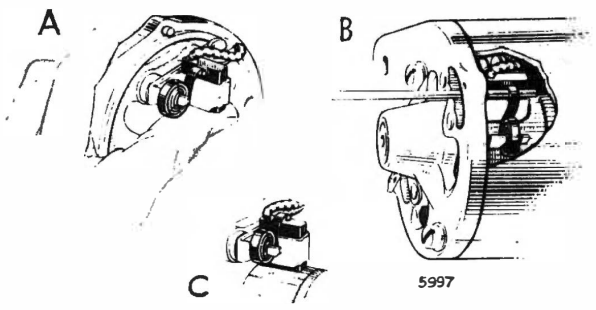

Fig. 4. Servicing the brushgear

Brushgear (Checking with yoke removed)

1. Lift the brushes up into the brush boxes and secure them in that position by placing the brush springs against the sides of the brushes as shown in Fig. 4 (A).

2. Fit the commutator end bracket over the commutator and release the brushes.

3. Hold back each of the brush springs and move the brush by pulling gently on its flexible connector. If the movement is sluggish, remove the brush from its holder and ease its sides by lightly polishing on a smooth file. Always refit brushes in their original positions. If the brushes are badly worn, new brushes must be fitted and bedded to the commutator. The minimum permissible length of brush is ¼ in. (6 mm.).

4. Test the brush spring pressures by means of a spring scale held radially to the commutator (see Fig. 5).

   These pressures should be 30 oz. (·85 kg.) maximum when exerted on a new brush, and 13 oz. (·36 kg.) minimum on a brush worn to ⅜ in. (7 mm.). Both pressures should be measured and new springs fitted if the tension is low.

Commutator

The commutator is of moulded construction and can be recognised by the exposed end being smooth, unlike that of fabricated commutators from which a metal roll-over and an insulating cone protrude (see Fig. 6).

Clean the commutator with a petrol-moistened cloth and inspect its surface. If the commutator is in good condition, the surface will be smooth and free from pits or burned spots. If pits or burned spots are in evidence, carefully polish with a strip of fine glass-paper while rotating the armature—never use emery paper.

If the foregoing procedure proves ineffective, the commutator should be re-skimmed, but care must be exercised during this process to ensure that the finished diameter is not less than 1·43 in. (3·64 cm.).

The process of re-skimming consists of rough turning and diamond turning. Whether or not rough turning is carried out depends upon the severity and unevenness of wear which has taken place. If the commutator cannot be completely cleaned up without going below the specified diameter, a new armature will be necessary.

A moulded commutator requires no undercutting in service, the production undercut being of sufficient depth to obviate any further need for this. The insulation slots should however, be kept clear of copper and carbon residue.

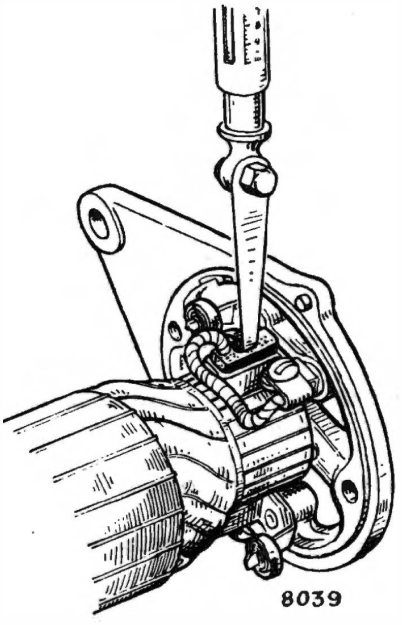

Fig. 5. Testing brush spring tension

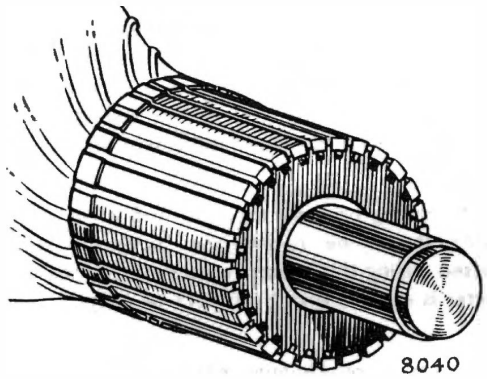

Fig. 6. *Commutator of moulded construction*

Armature

The troubles which may develop in armatures in service may be classified as short circuits, open circuits, and earthed circuits. The usual causes of these troubles and the methods of testing the armature are described in the following paragraphs.

Before proceeding with any test, clean the armature and remove the drive end bracket by pressing the shaft out of the end bracket bearing.

Short circuit test:

Discolouration of any one or two coils, and blackening of two or more commutator segments is a sign of a short circuit. The usual causes are as follows:—

1. Carbon or copper dust having become lodged between the commutator segments.
2. Solder particles getting behind the commutator.
3. An overload, resulting in excessive heating, causing the insulation to break down.
4. The insulation becoming damaged.

Place the armature in a Growler as shown in Fig. 7.

Energise the Growler and hold a narrow piece of steel strip over the top of the armature in line with the shaft. Slowly revolve the armature, keeping the steel strip in the same position. If a short circuit exists, the steel strip will be heavily attracted towards the slot containing the faulty coil. If the attraction is particularly heavy, switch off the Growler quickly, otherwise the coil may be entirely burnt out.

Remember that a coil is wound in two slots, so that on turning the armature further, a second faulty slot will be found.

Open circuit test:

An open circuit as the term implies, is a break in the armature windings. This defect is characterised by violent sparking at the commutator segments between which the open circuit occurs. Open circuits can occur at the commutator segments or in the armature winding, the more usual causes being:—

1. Overloading, causing excessive heating and melting out of the solder from the commutator risers.
2. Vibration sufficient to break the commutator connections.
3. Poor connections which have become oxidised.
4. An earth or short circuit burning open the winding.
5. A mechanical defect causing the armature to rub on some inside part of machine.

Using a 12 volt battery and a voltmeter with test prods,

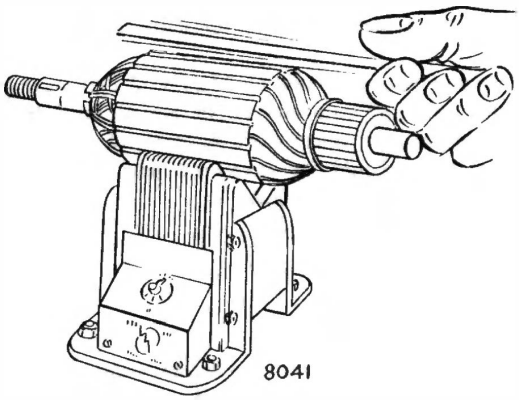

Fig. 7. *Armature short circuit test in Growler*

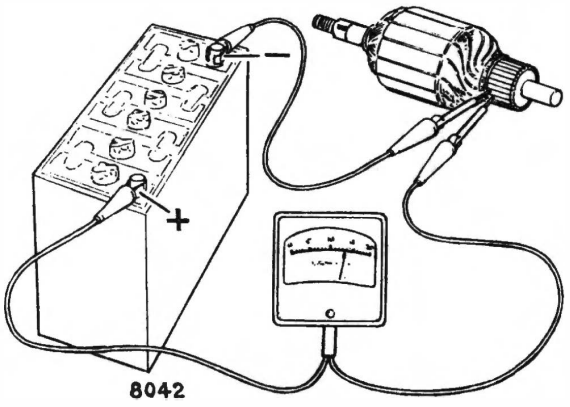

Fig. 8. *Armature open circuit test*

make the connections shown in Fig. 8. Place the voltmeter test prods on each pair of adjacent commutator segments in turn and note the voltmeter readings. If the armature is in good order, all readings will be similar, but if between any pair of segments a low or zero reading is obtained, one or more adjacent coils are open circuited.

Earthed circuit test:

An earthed circuit in the armature is caused by a breakdown in the insulation which will allow a passage of current to the generator frame. Such a breakdown can be attributed to one or more of the following defects:—

1. Dirt and carbon dust collecting behind the commutator risers.

2. The armature rubbing the field pole-faces, causing the laminations to rub into the armature wires.

3. By the laminations of the armature becoming loose and rubbing into the armature wires.

4. Overheating due to the machine having been run on an open circuit.

Using a 12 volt battery, voltmeter and test prods, make the test connections shown in Fig. 9. Keep one test prod in contact with the end of the armature shaft, and place the other on each commutator segment in turn.

There should be no voltmeter readings. Any segment on which a reading is obtained will be connected to the armature coil nearest an earth fault.

An alternative method is to use a test lamp instead of a voltmeter—the lamp will glow if there is an earth.

Field coils

Measure the resistance of the field coils without removing them from the generator yoke, by means of an ohmmeter connected between the field terminal and the yoke. The field resistance is 6 ohms.

If an ohmmeter is not available, connect a 12 volt d.c. supply between the field terminal and the generator yoke, with an ammeter in series. The ammeter reading should be approximately 2 amperes. Zero reading on the ammeter, or an "infinity" ohmmeter reading, indicates an open circuit in the field winding.

If the current reading is much more than 2 amperes, or the ohmmeter reading is much below 6 ohms, this is an indication that the insulation of one of the field coils has broken down.

In either event, unless a substitute generator is available, the field coils must be renewed. To do this, carry out the procedure outlined as follows:—

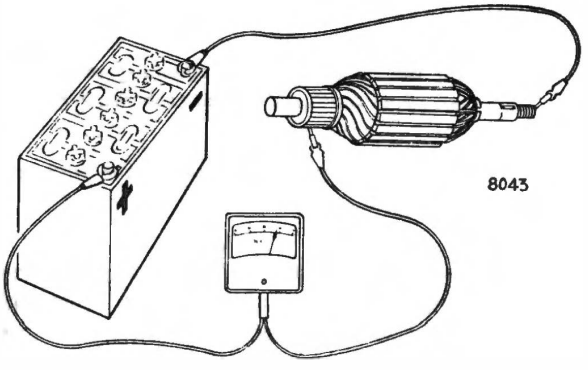

Fig. 9. *Armature earthed circuit test*

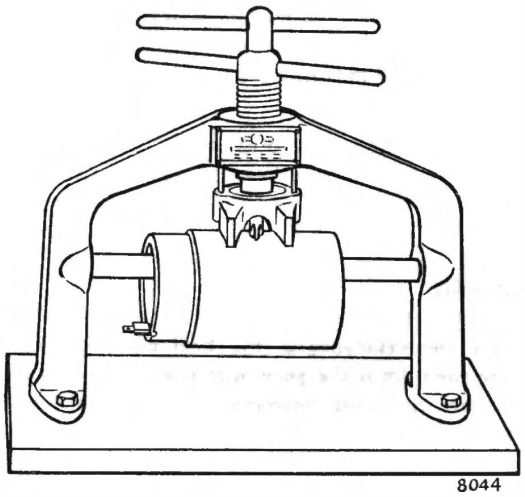

Fig. 10. *Pole-shoe screwdriver*

1. Drill out the rivet securing the field coil terminal assembly to the yoke, and remove the insulating sleeve from the terminal blade.

2. Unsolder the terminal blade and earthing eyelet.

3. Remove the insulation piece which is provided to prevent the junction of the field coils from contacting the yoke.

4. Mark the yoke and pole shoes so that the latter can be fitted in their original positions.

5. Unscrew the two pole shoe retaining screws by means of a pole-shoe screwdriver as shown in Fig. 10.

6. Draw the pole shoes and coils out of the yoke and lift off the coils.

7. Fit the new field coils over the pole shoes and place them in position inside the yoke. Take care to ensure that the taping of the field coils is not trapped between the pole shoes and the yoke.

8. Locate the pole shoes and field coils by lightly tightening the fixing screws.

9. Fully tighten the screws by means of the pole-shoe screwdriver.

10. Solder the terminal blade and earthing eyelet to the appropriate coil ends.

11. Refit the insulating sleeve and re-rivet the terminal assembly to the yoke.

12. Refit the insulation piece behind the junction of the two coils.

Bearings

Bearings which are worn to such an extent that they will allow side movement of the armature shaft must be renewed. To renew the bearing bush in the commutator end bracket, proceed as follows:—

1. Remove the old bearing bush from the end bracket. The bush can be withdrawn with a suitable extractor.

2. Withdraw and clean the felt retainer and the felt ring.

3. Insert the felt ring and its retainer into the bearing housing, then press a new bearing bush into the end bracket until the visible end of the bush is flush with the inner face of the bracket. To facilitate this operation, use a shouldered mandrel having a highly polished pilot end of the same diameter as the shaft to be carried by the bush (see Fig. 11).

Porous bronze bushes must not be reamed after fitting, or the porosity of the bush may be impaired.

Before fitting the new bearing bush, it should be allowed to stand for 24 hours completely immersed in engine oil; this will allow the pores of the bush to be filled with lubricant.

The procedure for renewing the ball bearing at the driving end is as follows:—

1. Drill out the rivets which secure the bearing retaining plate to the end bracket, and remove the plate—See Fig. 3.
2. Press the bearing out of the end bracket, and remove and clean the corrugated washer and felt ring.
3. Before fitting the replacement bearing, see that it is clean and pack it with high melting point grease.
4. Place the felt ring and corrugated washer into the bearing housing in the end bracket.
5. Locate the bearing in the housing and press it home.
6. Fit the bearing retaining plate by inserting new rivets from the pulley side of the bracket, and opening the rivets by means of a punch to secure the plate rigidly in position.

To reassemble

1. Fit the drive end bracket to the armature shaft. The inner journal of the bearing must be supported by a tube approximately 4 in. (10 cm.) long, $\frac{1}{8}$ in. (3 mm.) thick, and $\frac{5}{8}$ in. (1·6 cm.) internal diameter. Do not use the drive end bracket as a support for the bearing whilst fitting the armature.
2. Fit the yoke to the drive end bracket.
3. Push the brushes into the brush boxes and secure them in that position by positioning each brush spring against the side of its brush.
4. Fit the fibre thrust washer(s) and commutator end bracket to the yoke so that the dowel on the bracket locates with the groove in the yoke. Take care not to trap the brush connectors.
5. Insert a thin screwdriver through the ventilator holes adjacent to the brush boxes and gently lever the spring arms until the brushes locate correctly on the commutator (see "B", Fig. 4).
6. Refit the two through bolts, pulley spacer and shaft key.
7. Refit the driving pulley.
8. After reassembling lubricate the commutator end bearing.

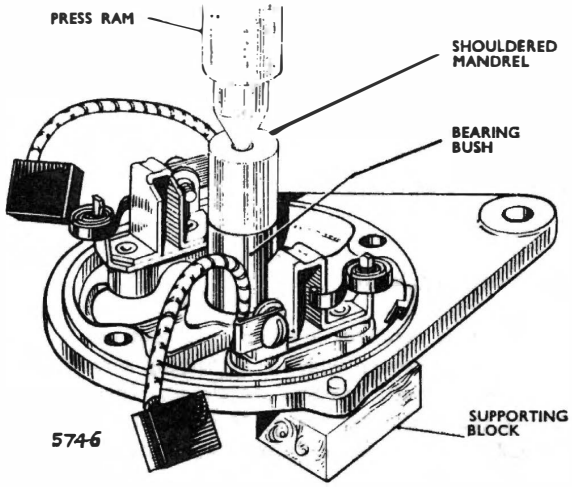

Fig. 11. *Fitting bearing bush to commutator end bracket*

GENERATOR RE-POLARIZATION

A replacement generator (dynamo) of the type described in this Section is suitable for use on either positive or negative earth systems, provided it is polarized to suit the vehicles' electrical system after fitting.

To do this, fit the generator to the vehicle but do not at this stage connect the cables to the "D" and "F" terminals.

Determine which battery terminal is earthed on the vehicle and then temporarily connect a jumper lead to the battery positive terminal (for negative earth systems) or negative terminal (for positive earth systems).

Flick the other end of the jumper lead several times against terminal "F", this serves to re-polarize the generator.

The temporary connection can now be removed and the original cables connected to terminals "D" and "F".

CONTROL BOX

Lucas RB340

DESCRIPTION (Refer to Figs. 12 and 13)

The control box is an electro-magnetically operated three-bobbin unit operating on the current-voltage system of generator output regulation, which provides a more efficient utilisation of generator capacity.

The unit comprises two separate vibrating armature regulators and a cut-out relay, one regulator being responsive to changes in current and the other to voltage. Toothed adjustment cams which can be operated by a special tool, provide a means of adjusting the electrical settings.

To counter the effect of seasonal and operating temperatures, the voltage regulator and cut-out are temperature compensated by means of bi-metal strip. In addition to the use of bi-metal strip, the effect of temperature fluctuation on the control box settings is further minimised by the use of a double swamp resistor connected in series with two shunt coils.

Voltage regulator

The voltage regulator has one coil which is connected between control box terminal "D" and earth, the latter connection being made through a swamp resistor. This regulator is thus responsive to changes in output voltage only.

Cut-out relay

The cut-out relay (usually referred to as the cut-out) is an electro-magnetic switch having its contacts connected between the generator and the battery.

The cut-out has two windings, first the heavy-gauge winding from the current regulator, which is then connected to the moving contact of the cut-out points. Secondly, a voltage coil which is similar to that of the voltage regulator being connected between terminal "D" and earth (through the swamp resistor).

The cut-out is thus responsive to both voltage (to close the contacts) and current which implements the "pull" on the closed contacts and also serves to quickly demagnetize the relay when the battery voltage exceeds that of the generator. This causes a "reverse" current to flow and the contacts are quickly separated, so isolating the generator from the battery.

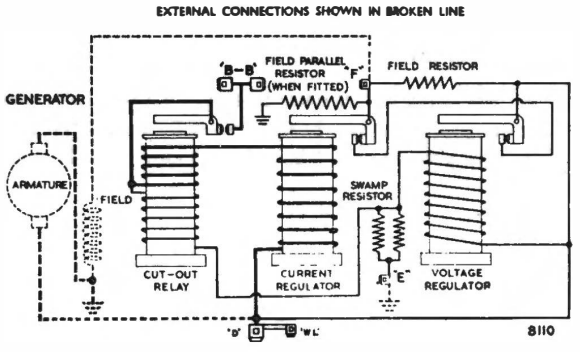

Fig. 12. *Circuit diagram of control box RB340*

Current regulator

The current regulator is wound with one coil of heavy gauge wire through which the charging current passes when the cut-out contacts are closed. The winding is connected at the one end to terminal "D" and is continued on to form the series winding of the cut-out relay.

The current regulator is thus responsive to generator output current only, the contacts being pre-set to open at the maximum rated current of the generator.

OPERATION (Refer to Fig. 12)

The current regulator and voltage regulator contacts are normally closed, thus completing the field circuit and short-circuiting the field resistor.

When the engine is started, the generator output voltage rises quickly due to its being on "full field". When the voltage rises to approximately 13 volts the cut-out contacts close and a charging current is passed to the battery.

This current is allowed (when the battery is in a low state of charge) to reach the maximum rated output of the generator. At this point the pull of the current regulator coil opens the current regulator contacts and the resistor is inserted in the field circuit, thus lowering the generator output.

This causes re-closure of the current regulator contacts and (with "full field" restored) a quick resumption of maximum output. This sequence continues until the battery state of charge is raised enough to cause a general rise in the system voltage, at which point the voltage regulator coil exerts enough "pull" to open the voltage regulator contacts.

From this point the output current diminishes, causing eventual non-operation of the current regulator contacts, while the voltage regulator continues controlling the field strength by the alternate insertion and removal of the field resistor, to keep the generator voltage constant.

SERVICING PRECAUTIONS

Cleaning the contacts

The control box contacts may become oxidised. This is a condition which arises normally in service. Hence all contacts should be cleaned periodically. Different materials are required for cleaning the regulator and cut-out contacts.

The contacts for the voltage and current regulators are made of tungsten, and so should be cleaned with fine carborundum stone or silicon carbide paper. The dust and foreign matter should be wiped away by means of a fluffless cloth which has been moistened with methylated spirits.

The cut-out contacts are made of silver and should be cleaned with a piece of fine glass paper. All dust should be removed with a cloth soaked in methylated spirits. On no account should carborundum stone or emery paper be used for cleaning the cut-out contacts, or these being silver will become damaged.

If the control unit will not respond to the adjustments outlined, an exchange unit should be fitted and the original unit subjected to bench examination in a properly equipped electrical workshop.

A special tool must be used for setting the regulator adjustment cams. This is normally available from any Lucas Service Station, the Lucas part number is 54381742.

TESTING AND ADJUSTING CONTROL BOX

(Refer to Fig. 13)

The following tests are made with the control box on the car and must be conducted in the sequence indicated. Ensure that the control box is at its normal operating temperature, then carry out the tests as quickly as possible to avoid overheating the system.

Checking the charging circuit

Before disturbing any electrical settings, ensure that the fault does not lie outside the control box, as follows:—

1. Check the fan belt and adjust if necessary.
2. Check that the battery terminals and battery earth are clean and tight.
3. Inspect the wiring of the charging circuit and carry out continuity tests between the generator, control box, and the ammeter when fitted.
4. Check earth connections, particularly of the control box.
5. Check the battery with a hydrometer and a heavy discharge tester.

6. Check the generator by removing and linking the cables at control box terminals "D" (voltage regulator) and "F" (current regulator) and connecting a zero to 20 voltmeter between this link and earth, and running the generator up to 1,000 r.p.m. when a rising voltage should be shown.

If the generator is run at a fixed speed but the ammeter pointer swings erratically within the charging range, the contacts of the voltage regulator or current regulator may need cleaning.

Voltage Regulator—Testing and adjusting

Open circuit settings:

Ambient temperature	Voltage setting
10°C. (50°F.)	14·9 to 15·5
20°C. (68°F.)	14·7 to 15·3
30°C. (86°F.)	14·5 to 15·1
40°C. (104°F.)	14·3 to 14·9

This operation must be completed as quickly as possible to avoid errors due to heating.

1. Withdraw the cables from control box terminals "B" (cut-out relay).

2. Join together the cables taken from terminals "B" and insulate, to provide current for the ignition. (Extreme care must be exercised to avoid shorting these cables to the other control box terminals, otherwise serious damage may be caused to the regulators).

3. Connect a first-grade zero to 20 moving-coil voltmeter between control box terminal "D" and a good earthing point.

   A convenient method of making this connection is to withdraw the ignition warning lamp feed from control box terminal "WL", and to clip the voltmeter lead to the small terminal blade thus exposed —this terminal being electrically common with terminal "D".

4. Start the engine and run the generator at 3,000 r.p.m., when the open circuit voltage reading should lie between the limits given for the appropriate ambient temperature.

5. If the reading occurs outside the prescribed limits, stop the engine and remove the control box cover.

6. Re-start the engine and run the generator at 3,000 r.p.m.

7. Using the correct tool, turn the voltage regulator adjustment cam until the correct setting is obtained—turning the tool clockwise to raise the setting, or anti-clockwise to lower it.

8. Check the setting by stopping the engine and then again raising the generator speed to 3,000 rp.m.

9. Restore the original connections and refit the cover.

Cut-out relay—Testing and adjusting

Electrical settings:

Cut-in voltage	...	...	12·7 to 13·3
Drop-off voltage	...	...	9·5 to 11·0

Cut-in (closing) voltage:

Testing and adjusting should be completed as quickly as possible to avoid errors due to heating.

1. Connect a first-grade zero to 20 moving coil voltmeter between control box terminal "D" (voltage regulator) and a good earthing point.

   A convenient method of making this connection to terminal "D" is to withdraw the ignition warning lamp feed from control box terminal "WL" and to clip the voltmeter lead to the small terminal blade thus exposed—this terminal being electrically common with terminal "D".

2. Start the engine and slowly increase its speed.

3. Observe the voltmeter pointer. The voltage should rise steadily and then drop slightly at the instant of contact closure. The cut-in voltage is that which is indicated immediately before the pointer drops back.

   If the cut-in occurs outside the specified limits, an adjustment must be made. In this event, reduce the engine speed to below cut-in value and continue as follows:—

4. Remove the control box cover.

5. Using the correct tool, turn the cut-out relay adjustment cam a small amount in the appropriate direction—turning the tool clockwise to raise the setting, or anti-clockwise to lower it.

6. Repeat this checking procedure until the correct setting is obtained.

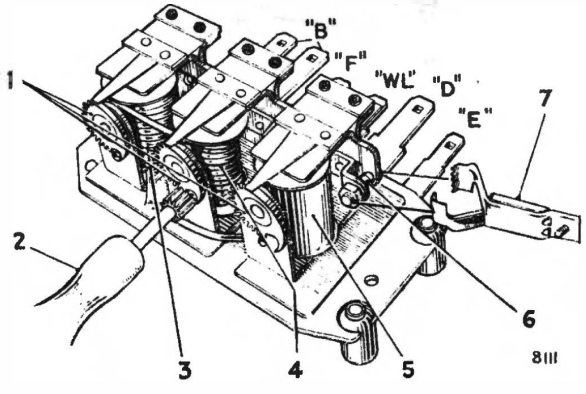

1. ADJUSTMENT CAMS
2. LUCAS SETTING TOOL
3. CUT-OUT RELAY
4. CURRENT REGULATOR
5. VOLTAGE REGULATOR
6. VOLTAGE REGULATOR CONTACTS
7. CLIP

Fig. 13. *Control box RB340 and method of adjusting*

7. Stop the engine, restore the original connections, and refit the cover.

Drop-off (opening) voltage:

1. Withdraw the cables from the control box terminals "B" (cut-out relay).

2. Join together the cables taken from terminals "B" (cut-out relay) and insulate to provide current for the ignition. (Extreme care must be exercised to avoid shorting these cables to the other control box terminals, otherwise serious damage may be caused to the regulators).

3. Connect a first-grade zero to 20 moving coil voltmeter between control box terminals "B" (cut-out relay) and earth.

4. Start the engine and increase its speed to approximately 3,000 r.p.m.

5. Slowly decelerate, and observe the voltmeter pointer.

   Opening of the contacts indicated by the voltmeter pointer dropping to zero should occur between the specified limits. If the drop-off occurs outside these limits an adjustment must be made. In this event, continue as follows:—

6. Stop the engine and remove the control box cover.

7. Adjust the drop-off voltage by carefully bending the fixed contact bracket. Reducing the contact gap will raise the drop-off voltage; increasing the gap will lower the drop-off voltage.

8. Repeat the test, and if necessary re-adjust until the correct drop-off setting is obtained.

9. Restore the original connections and refit the cover.

Current regulator—Testing and adjusting

On-load setting:

The current regulator on-load setting is equal to the maximum rated output of the generator, which is 22 amperes.

When checking the setting of the current regulator, the generator must be made to develop its maximum rated voltage output whatever the state of charge of the battery may be. To accomplish this, the voltage regulator must be rendered inoperative. The procedure is as follows:—

1. Cause the voltage regulator contacts to be short-circuited by closing them with a clip.

2. Withdraw the cables from control box terminals "B" (cut-out relay), and join the cables together to provide current for the ignition. (Extreme care must be exercised to avoid shorting these cables to the other control box terminals, otherwise serious damage may be caused to the regulators).

3. Connect a first-grade moving coil zero to 40 ammeter between these cables and terminals "B" (cut-out relay).

4. Start the engine and run the generator at 4,500 r.p.m. when the ammeter pointer should be steady and indicate a current of 22 amperes.

5. If the ammeter reading is too high or too low, turn the current regulator adjustment cam by using the correct tool, until the correct setting is obtained—turning the tool clockwise to raise the setting or anti-clockwise to lower it.

6. Stop the engine.

7. Refit the control box cover and restore the original connections.

FUSES (Fig. 14)

Two 35 amp. fuses with spares are carried by a separate Fuse Unit. The fuse which bridges terminal blocks 1—2 is to protect auxiliary circuits independent of the ignition switch. The fuse bridging terminals 3—4 protects those circuits controlled by the ignition switch.

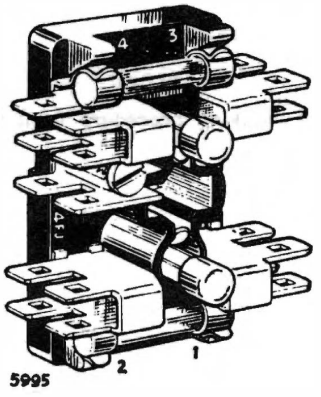

Fig. 14. *Fuse unit*

ALTERNATOR

Lucas 10AC

DESCRIPTION (Refer to Figs. 15 and 16)

The 10AC alternator is designed particularly to cater for the increased electrical loading imposed by the wider range of equipment used on certain models. It will meet electrical loadings upwards to 35 amperes and, under congested traffic conditions will provide a useful output at low engine speeds. The unit is robustly constructed and will require very little maintenance in service, as there is no commutator, and lubrication is not required.

Technical details

Basically, the alternator comprises a stationary output winding with built-in rectification, and a rotating field winding energised from the battery through a pair of slip-rings. Commutation problems associated with the collection of heavy current by way of brushgear are thus avoided.

The stator comprises a 24 slot 3-phase star-connected winding on a ring-shaped lamination pack. The rotor is of 8-pole construction and carries the field winding connected to two face-type sliprings. It is supported by a ball-bearing in the cast aluminium drive end bracket, and a needle roller bearing in the cast aluminium slip-ring end cover.

The slipring end cover also carries six silicon diodes connected in a three-phase bridge circuit to give rectification of the generated A.C. output. The diodes are cooled by airflow through the alternator, induced by a 6 in. (15 cm.) diameter ventilating fan at the drive end.

Output control

The alternator terminal voltage is maintained between pre-set limits by a transistor assisted voltage regulator device in the field circuit. An external current controlling device is not required, the self-regulating characteristic of the alternator being such that maximum output is limited to approximately 35 amperes, at rotor speeds up to 12,500 r.p.m. with an output voltage of 13·5 volts.

At zero or very low rotor speeds, the reverse characteristics of the diodes prevent battery current from flowing through the output windings, so that a cut-out is unnecessary.

A 6RA relay is used for disconnecting (de-energising) the field circuit and voltage regulator from the battery when the engine is stationary. Its normally open pair of contacts are connected in series with the field winding, the relay operating coil being energised to close the contacts when the ignition switch is turned to the "ON" position.

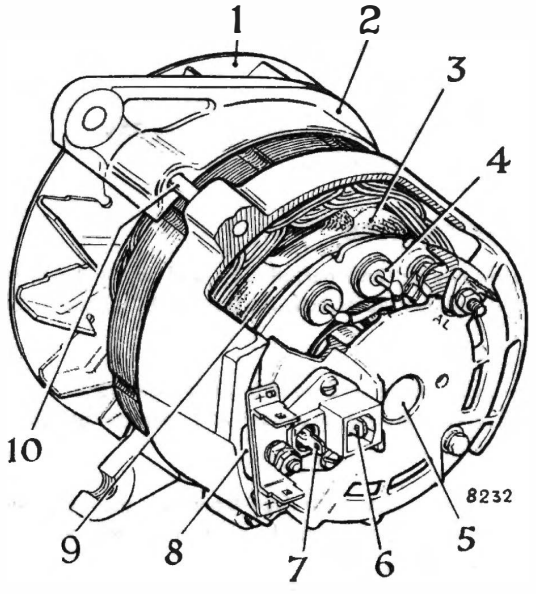

1. COOLING FAN
2. DRIVE-END BRACKET
3. ROTOR
4. SILICON DIODES (6)
5. NEEDLE-ROLLER BEARING
6. POSITIVE FIELD TERMINAL
7. NEGATIVE FIELD TERMINAL
8. BRUSH BOX MOULDING
9. SLIP-RING ASSEMBLY
10. "THROUGH" FIXING BOLTS (3)

Fig. 15. *Cut-away view of alternator showing cooling fan and diodes*

Warning lamp control

A control unit, model 3AW, is connected electrically to the centre point of one of the pairs of diodes in the alternator. This unit enables an indicator lamp on the instrument panel to be used to show that the alternator is charging when the engine runs at normal speeds.

With the ignition "ON" and the alternator at rest or running very slowly, the lamp is illuminated from the battery supply. When, at a low engine speed, a small low-voltage current from the alternator opens the unit's switching device, the lamp will cease to illuminate. In most instances this will occur below the normal engine idling speed, indicating that the alternator is providing output at this speed. In effect, therefore, the indication given is similar to that of the "ignition" or "no-charge" warning lamp universally employed with D.C. systems.

Basically, the unit consists of a pair of contacts held closed against spring tension by a length of resistance wire. When cold, the wire is in tension; when current flows through the wire it heats and lengthens, allowing the contacts to open.

The unit is similar in appearance to the FL5 flasher unit for which reason it has a distinguishing 3AW green label attached to the cover.

MAINTENANCE

Inspect the fan belt periodically, and adjust if necessary in the manner described in Section "B" of this publication.

The ball-bearing and needle-roller bearing are packed with grease during assembly and require no periodic attention.

Maintain the alternator free from dirt and oil residue, particularly around the slip-ring end cover ventilating apertures.

TESTING THE ALTERNATOR IN POSITION

Refer to Fig. 20a

In the event of a fault developing in the charging circuit, adopt the following procedure and observe the precautions shown under "Servicing Precautions":—

1. Inspect the driving belt for wear and tension.

2. Disconnect the battery earth cable.

3. If an ammeter is fitted to the vehicle proceed to paragraph 4. If not, disconnect the cable from the alternator main output terminal and connect a good quality moving-coil ammeter, capable of reading up to at least 75 amperes, between the main output terminal and the disconnected cable.

4. Connect the alternator field winding across the battery terminals, by-passing the voltage regulator but leaving the field isolating device contacts in circuit. To do this, disconnect the cables from the voltage regulator 4TR at terminals "F" and "–" and join these cable ends externally.

5. Reconnect the battery earth lead. Switch "on" the ignition, start the engine and slowly open the throttle until the alternator speed is approximately 4,000 r.p.m. (2100 engine r.p.m.). At this speed the reading on the ammeter should be 25 amperes or more at ambient temperature. A low current reading wil

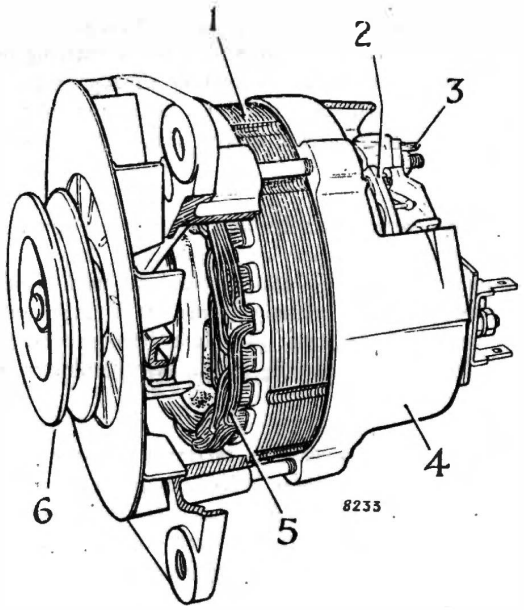

1. STATOR LAMINATIONS
2. ALUMINIUM HEAT SINK
3. WARNING LIGHT TERMINAL "AL"
4. SLIP-RING END-COVER
5. STATOR WINDINGS
6. DRIVE PULLEY

Fig. 16. *Cut-away view of alternator showing stator winding and drive pulley*

indicate either a faulty alternator or poor circuit wiring connections. If, after checking the latter (especially the earth connections), a low reading persists upon repeating the test, proceed to paragraph 6. If, however, a zero reading results, switch on the ignition and check that battery voltage is being applied to the rotor windings by connecting a voltmeter between the two cable ends normally attached to the alternator field terminals. No reading in this test indicates a fault in the field isolating relay 6RA or the wiring associated with this circuit. Check and rectify as necessary.

6. If a low output has resulted from the test described in paragraph 5 and the external circuit and field isolating arrangement are both in order, measure the resistance of the rotor coil (field) by means of an ohmmeter connected between the field terminal blades with the external wiring disconnected. The resistance must be approximately 3·47 ohms.

   If an ohmmeter is not available, connect a 12-volt D.C. supply between the field terminals with an ammeter in series. The ammeter reading should be approximately 3·5 amperes. A zero reading on the ammeter, or an "infinity" ohmmeter reading, indicates an open circuit in the field system, i.e. brushgear, slip-rings or winding. Conversely, if the current reading is considerably above or the ohmmeter reading considerably below the value stated, it is an indication of a short-circuit in the rotor winding, and the rotor/slip-ring assembly must be renewed.

Conclusion of test

The alternator test is made to determine the condition of the alternator.

1. The alternator is satisfactory if a reading approximating its rated output is obtained on the ammeter at ambient temperature.

2. A low reading at 4,000 r.p.m. (2,100 engine r.p.m.) indicates a faulty alternator or poor circuit wiring connections.

3. A zero reading can be the result of a faulty field isolating relay, or its associated circuit. (If the relay fails to close, it will prevent the rotor field circuit from being completed across contacts "C1" and "C2", in which case, check the relay circuit).

FIELD ISOLATING RELAY TEST

The 6RA relay is used for de-energising the alternator field winding when the engine is stopped, by disconnecting the supply from the rotor field, through the action of turning the ignition switch to the "OFF" position. This allows the contacts "C1" and "C2" to part and open-circuit the rotor field winding. The alternator will not generate if the contacts fail to close when the ignition is switched "ON".

Procedure

With the ammeter connected as detailed in the previous test, remove the lead from the terminal "C2" and temporarily connect it to the "C1" terminal.

Conclusion of test

If the alternator generates its specified output with the two leads in position as described, a faulty relay is indicated. Make the usual checks for continuity of the relay-operating winding, relay circuit wiring, earth connection, etc. If there is voltage at the alternator field terminals when the ignition is switched "OFF", the relay is faulty due to its contacts not opening. This condition would tend to discharge the battery. If, however, the relay and associated circuit is found satisfactory, the 4TR voltage regulator may be faulty, in which case, substitute the existing unit for one which is known to be serviceable.

SERVICING PRECAUTIONS

1. Reversed battery connections will damage the diode rectifiers. Battery polarity should be checked before connections are made to ensure that the connections correspond to the vehicle battery earth polarity.

2. Never earth the brown/yellow cable if disconnected at "AL" on 3AW otherwise a damaged alternator, diode and wiring will result.

3. Never earth the brown/green cable if disconnected at alternator; if this cable is earthed with the ignition "on" the voltage regulator, relay, and their associated wiring may be damaged.

4. Earthing the alternator main output cable or terminal will damage the alternator and/or circuit.

   This is true even when the system is not in operation since no circuit-breaker is used and the battery is applied to the main output cable at all times.

5. The alternator should never be run on open-circuit with the field winding energised, or the rectifier diodes are likely to be damaged due to peak-inverse-voltages. (When checking regulator open-circuit voltage, the voltage is controlled by the regulator and no damage occurs, even though the main alternator cable is disconnected).

6. Do not attempt to polarise the alternator. No polarisation is necessary. Any attempt to do so may result in damage to the alternator, regulator or associated circuits.

7. Ensure that when connecting a battery charger that it is connected properly, otherwise the rectifier diodes will be damaged. The polarity of the alternator system should be checked and the charger cables connected to the battery accordingly. It is advisable to disconnect the vehicle battery cables.

8. Never use ohmmeter of the type incorporating a hand-driven generator for checking the diode rectifiers or transistor.

9. The battery must NEVER be disconnected while the alternator is running. Failure to observe this ruling will cause the 4TR Control Unit to be irreparably damaged.

Electric Arc Welding Precautions

If electric arc welding has to be done on the vehicle the battery and alternator cables must first be disconnected.

Vehicles must never be started with an electric welding plant attached.

Boost-charging Precautions

If a battery is to be boost-charged from a main's battery booster, it must first be disconnected. Vehicles must never be started with a boost-charger connected.

If a battery is to be boosted from another battery, the booster battery must always be connected in parallel, i.e. negative to negative and positive to positive.

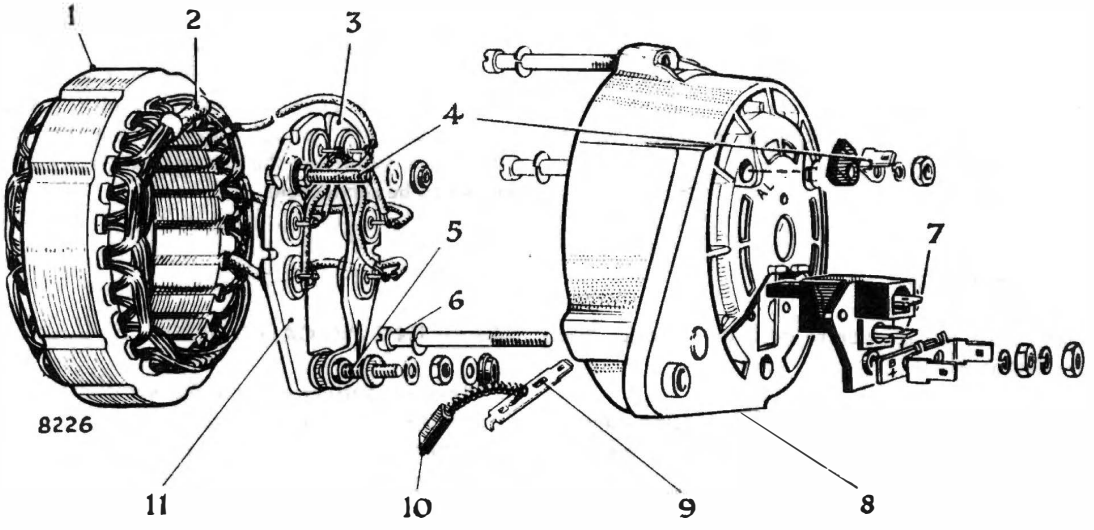

1. STATOR
2. STAR POINT
3. NEGATIVE HEAT SINK AND ANODE BASE DIODES (BLACK)
4. WARNING LIGHT TERMINAL "AL"
5. OUTPUT TERMINAL (+)
6. "THROUGH" FIXING BOLTS (3)
7. FIELD TERMINAL (2)
8. SLIP-RING END-COVER
9. TERMINAL BLADE RETAINING TONGUE
10. ROTOR SLIP-RING BRUSH
11. POSITIVE HEAT SINK AND CATHODE BASE DIODE (RED)

Fig. 17. *Brushgear and diode heat sinks in exploded view*

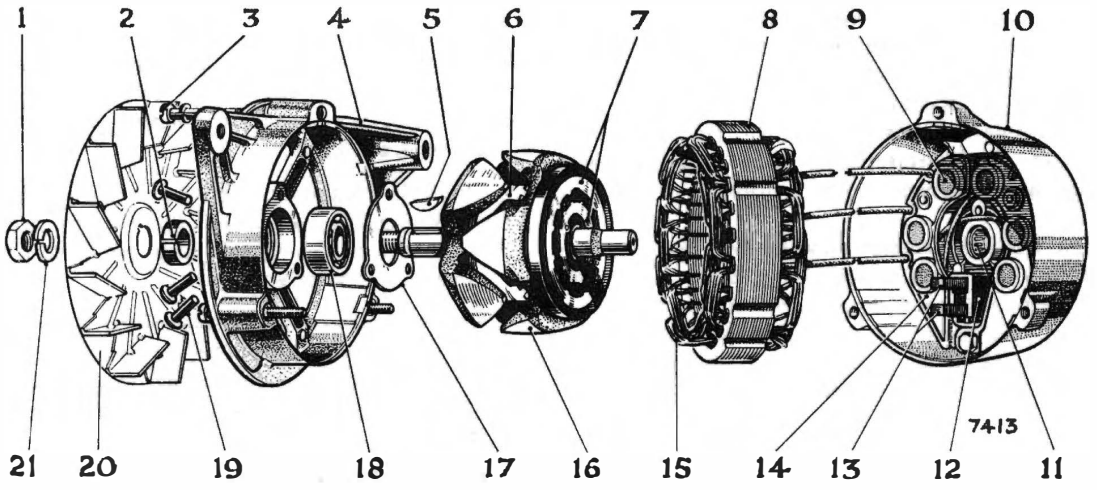

1. SHAFT NUT
2. BEARING COLLAR
3. "THROUGH" FIXING BOLTS (3)
4. DRIVE-END BRACKET
5. WOODRUFF KEY
6. ROTOR (FIELD) WINDING
7. SLIP-RINGS
8. STATOR LAMINATIONS
9. SILICON DIODES
10. SLIP-RING END-COVER
11. NEEDLE-ROLLER BEARING
12. BRUSH BOX MOULDING
13. BRUSHES
14. DIODE HEAT SINK
15. STATOR WINDINGS
16. ROTOR
17. BEARING RETAINING-PLATE
18. BALL BEARING
19. BEARING RETAINING-PLATE RIVETS
20. COOLING FAN
21. SPRING WASHER

Fig. 18. *Components of alternator*

SERVICING THE ALTERNATOR (Figs. 17 and 18)

Dismantling

1. Disconnect the battery and alternator cables and remove the alternator from the vehicle.

2. From the drive-end remove the shaft nut, spring washer, pulley and fan.

3. Unscrew and withdraw the three "through" bolts.

4. Mark the drive-end bracket, lamination pack and slip-ring end-cover so that they can be reassembled in correct angular relation to each other.

5. Withdraw the drive-end bracket and rotor from the stator. The drive-end bracket and rotor need not be separated unless the drive-end bearing requires examination (refer to paragraph 2 under the heading of "Ball and Needle Roller Bearings"), or the rotor is to be renewed. In this event the rotor must be removed from the drive-end bracket by means of a hand-press, having first removed the shaft key and bearing collar.

6. From the slip-ring end-cover remove the terminal nuts, washers, insulating pieces, brushbox screws and the 2BA hexagon-head bolt.

7. Withdraw the stator and heat sink assemblies from the slip-ring end-cover.

8. Close up the retaining tongue at the root of each field terminal blade and withdraw the brush-spring-and-terminal assemblies from the moulded brushbox.

Inspection of brushgear

1. Measure brush length. A new brush is $\frac{5}{8}$ in. (15·88 mm.) in length; whilst a fully worn brush is $\frac{3}{8}$ in. (3·97 mm.) in length, therefore, it must be renewed at, or approaching this length. The new brush is supplied complete with a brush spring and "Lucar" terminal blade and has merely to be pressed in by hand until the tongue registers. To ensure that the terminal is properly retained, carefully lever up the retaining tongue with a screwdriver which has a narrow blade, so that the tongue makes an angle of approximately 30° with the terminal blade.

2. The normal brush spring pressures are between 4 and 5 oz. (113 and 142 grams) with the spring compressed to $\frac{25}{64}$ in. (19·84 mm.) in length and between 7½ and 8½ oz. (212 and 242 grams) with the spring compressed to $\frac{13}{32}$ in. (10·31 mm.) in length. These pressures are to be measured should the equipment necessary be available.

3. Check that the brushes move freely in their holders. If they are sluggish, clean the brush sides with a petrol-moistened cloth or, if this fails to effect a cure, lightly polish the brush sides with a "fine" file. Remove all traces of brush-dust before re-housing the brushes in their holders.

Inspection of slip-rings

The surfaces of the slip-rings should, on inspection, be smooth and uncontaminated by oil or other foreign material. Clean the surfaces, if necessary, using "extra fine" glass-paper only. On no account must emery cloth or similar abrasives be used. No attempt is to be made to machine the slip-rings, as any eccentricity in the machining will adversely affect the high-speed performance of the alternator. The small current carried by the rotor winding, and the unbroken surface of the slip-rings mean that the likelihood of scored or pitted slip-rings is virtually negligible.

The rotor

1. Test the rotor winding by connecting an ohmmeter or 12-volt D.C. supply between the slip-rings (as described in paragraph 6, under the heading of "Testing the Alternator in Position", where this test was made with the brushgear in circuit). The readings of resistance or current must be given as in the aforementioned paragraph 6.

2. Test for defective insulation between each of the slip-rings and one of the rotor poles, using a mains low-wattage test lamp for the purpose. If the lamp illuminates, the coil is earthing and a new rotor/slip-ring assembly must be fitted.

3. No attempt is to be made to machine the rotor poles or to true a distorted shaft.

Testing the stator

1. Unsolder the three stator cables from the heat sink assembly, taking care not to overheat the diodes (see paragraph 3 under the heading of "Renewing Diode Heat Sink").

   Check the continuity of the stator windings by first connecting any two of the three stator cables in series with a 1·5 watt test lamp (see General Data) and a 12 volt battery.

   Repeat the test, replacing one of the two cables by the third cable. Failure of the test lamp to illuminate on either occasion indicates that part of the stator winding is open-circuited and a new stator must be fitted.

2. Test for defective insulation between the stator coils and lamination pack with a mains test lamp. Connect the test probes between any one of the three cable ends and the lamination pack. If the lamp illuminates, the stator coils are earthing and a new stator must be fitted.

3. Before re-soldering the stator cable ends to the diode pins carry out the tests given under the heading of "Testing the Diodes".

Testing the diodes

1. Each diode used can be checked by connecting it in series with a 1·5 watt test bulb (refer to General Data), across a 12-volt D.C. supply and then reversing the connections.

2. Current must flow, and the bulb illuminate, in one direction only. Should the bulb illuminate in both tests, or fail to illuminate in either, the diode is defective and the appropriate heat sink assembly must be renewed.

3. The foregoing procedure is adequate for service purposes.

4. Accuracy in measurement of diode resistance requires Factory equipment. Since the forward resistance of the diode varies with the voltage applied, no realistic readings can be obtained with battery-powered ohmmeters. However, should a battery ohmmeter be used, a good diode will yield "infinity" in one direction, and some indefinite, but much lower reading, in the other.

Never use ohmmeters of the type incorporating a hand-driven generator for checking diodes.

Renewing diode heat sink (Figs. 19 and 20)

1. The alternator heat sink assembly comprises two mutually insulated portions, one of positive polarity and the other negative. The diodes are not individually renewable, therefore, for ease of servicing, are supplied already pressed into the appropriate heat sink portion. The positive portion carries three cathode base diodes marked *red*, and the negative portion three anode base diodes marked *black*.

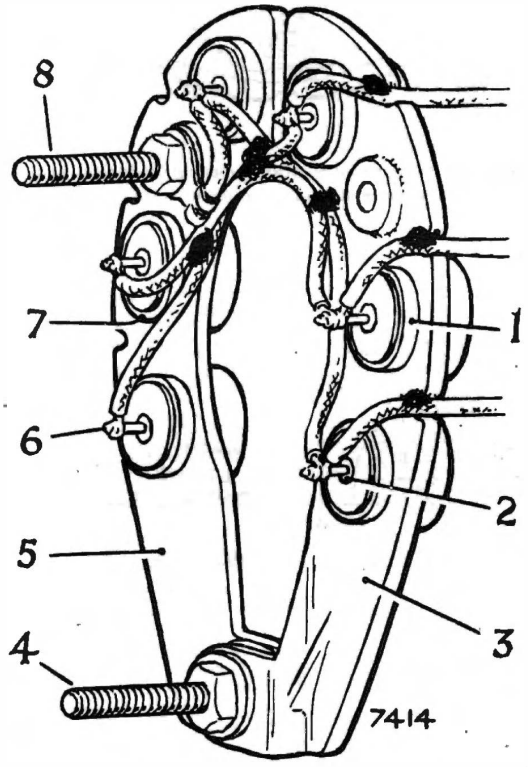

1. ANODE BASE SILICONE DIODE (3) (BLACK)
2. GLASS SEAL
3. POSITIVE HEAT SINK
4. OUTPUT TERMINAL (+)
5. NEGATIVE HEAT SINK
6. DIODE PIN
7. CATHODE BASE SILICON DIODE (3) (RED)
8. WARNING LIGHT TERMINAL "AL"

Fig. 19. *Positive and negative heat sinks showing cathode and anode base diodes*

2. When soldering the interconnections, "M" grade 45—55 tin-lead solder must be used.

3. *Great care must be taken to avoid overheating the diodes.* The diode pins are to be *lightly* gripped with a pair of long-nosed pliers (which act as a thermal shunt) and the operation of soldering carried out as quickly as possible.

   Care is to be exercised when handling the heat-sink and diode assemblies, as the diode pins, if bent, will fracture the glass seal at their base, this will then cause the appropriate assembly to become unserviceable and means that a new heat-sink and diode assembly will be required.

4. After soldering, the connections must be neatly arranged around the heat-sinks to ensure clearance of the rotor, and be tacked down with "3M" EC.1022 adhesive obtainable from the manufacturers, who are the Minnesota Mining and Manufacturing Co. Ltd., 3M House, Wigmore Street, London, W.1. The three stator connections must pass through the appropriate notches at the edge of the heat sinks.

Ball and needle-roller bearings

Bearings which are worn to the extent that they allow excessive side movement of the rotor shaft must be renewed.

1. The needle-roller bearing in the slip-ring end-cover is supplied complete with the end-cover as a serviced item.

2. To renew the drive-end ball bearing (following withdrawal of the rotor shaft from the drive-end bracket) proceed as follows:—

   File away the roll-over on each of the three bearing retaining-plate rivets and punch out the rivets.

   Press the bearing out of the bracket.

   Before fitting the replacement bearing ensure that it is clean and, if necessary, pack it with high melting point grease.

   Locate the bearing in the housing and press it home.

   Refit the bearing retaining plate, using new rivets.

Reassembling (Refer to Figs. 17 and 18)

Reassembly of the alternator is the reversal of the dismantling procedure.

Take care to align the drive-end bracket, lamination pack and slip-ring end-cover correctly, the marking of which was described in paragraph 4 under the heading of "Dismantling".

If the rotor and drive-end bracket have been separated, the inner journal of the drive-end bearing must be supported by a tube of appropriate dimensions for the reassembling operation.

Do not use the drive-end bracket as a support for the bearing while fitting the rotor.

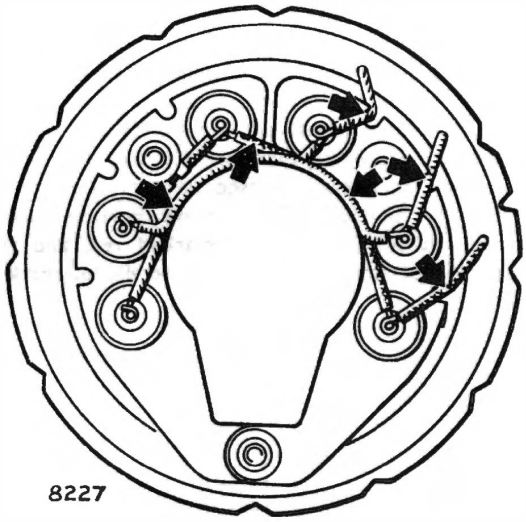

Fig. 20. *Arrangement of securing internal connections with adhesive at points indicated by arrows*

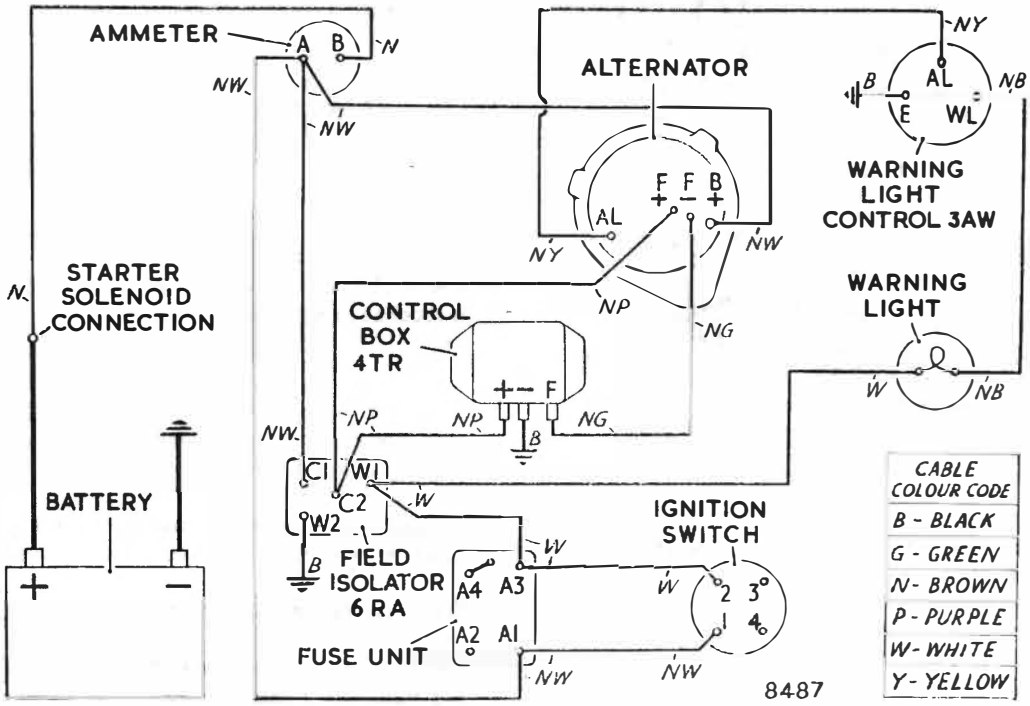

FOR MODELS WITHOUT AN AMMETER THE CABLES SHOWN CONNECTED TO THE AMMETER "A" TERMINAL WILL BE CONNECTED TO THE BATTERY TERMINAL ON THE STARTER SOLENOID SWITCH AND COLOURED BROWN INSTEAD OF BROWN/WHITE. THE CABLE SHOWN CONNECTED TO THE AMMETER "B" TERMINAL WILL OBVIOUSLY BE DELETED. SOME MODELS WILL HAVE THE EARTH CABLE FROM THE 6RA RELAY LINKED TO THE EARTH CABLE ON THE 4TR CONTROL BOX.

Fig. 20a. *Alternator charging circuit*

ALTERNATOR CONTROL

Lucas 4TR

DESCRIPTION (Fig. 21)

The self-regulating characteristic of an alternator results in its current output being limited to the maximum designed rating: it is thus unnecessary to provide an external current-limiting device such as is normally associated with a D.C. generator.

In addition, the reverse characteristics of the rectifiers prevent the battery from discharging through the alternator windings when the alternator is at rest or being driven only very slowly, so that a cut-out relay also becomes unnecessary.

Consequently, the only form of control required is one to maintain the alternator terminal voltage at a substantially constant predetermined value.

Hitherto, vibrating-contact electromagnetic devices have been employed for this purpose, but this Alternator Control Model 4TR takes advantage of the availability of Lucas silicon semi-conductor devices to provide an electronic control in which all moving parts are eliminated.

The unit provides highly stabilised output control, and operates satisfactorily at high temperatures, due to the use of silicon semi-conductor devices.

OPERATION (Figs. 22 to 24)

In effect, the action is similar to that of the electromagnetic regulator in that the current in the alternator field winding is varied to maintain the generated output voltage within close limits, but switching is achieved by transistors instead of vibrating contacts, while a Zener diode provides the voltage reference in place of the voltage coil and tension spring system.

When the ignition is switched "on", the control unit is connected to the battery through an auxiliary pair of contacts on the ignition switch. By virtue of the connection through R1, the base circuit of the power transistor T2 is conducting so that, by normal transistor action, current also flows in the collector-emitter of T2 which thus acts as a closed switch in the field circuit, and battery voltage is applied to the field winding.

As the alternator rotor is driven by the engine at increasing speed, the rising voltage generated across the stator output winding is applied to the potential divider consisting of R3, R2 and R4. According to the position of the tapping point on R2, a proportion of this potential is applied to the Zener diode. The latter is a device which opposes the passage of current through it until a certain voltage is reached (known as the "breakdown" voltage) but thereafter it conducts comparatively freely.

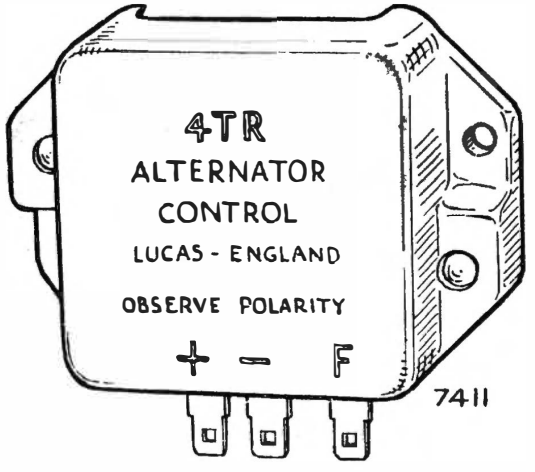

Fig. 21. *4TR alternator voltage control unit showing terminal connections*

The Zener diode can thus be considered as a voltage-conscious switch which closes when the voltage across it reaches its breakdown voltage (about 10 volts) and since this is a known proportion of the alternator output voltage as determined by the position of tapping point R2, the breakdown point therefore reflects the value of the output voltage. When this point is reached, the Zener diode conducts and current flows in the base circuit of the driver transistor T1.

Again by transistor action, current will now flow in the collector-emitter portion of T1, so that some of the current which previously passed through R1 and the base circuit of T2 is now diverted through T1. Thus the base current of T2 is reduced and, as a result, so also is the alternator field excitation.

Consequently, the alternator output voltage will tend to fall—and this in turn will tend to reduce the base current in T1, allowing increased field current to flow in T2. By this means, the field current is continuously varied to keep the output voltage substantially constant at the value determined by the setting of R2.

Basically, this is the principle of operation of the 4TR regulator, but there are certain desirable additions. If the field current were varied continuously as described, considerable power dissipation would occur in the power transistor, leading to problems of overheating. For this reason, it is desirable to operate the transistor either in the fully-on or fully-off condition, and this is the purpose of the positive feed-back circuit comprising R5 and C2.

As the field current in transistor T2 starts to fall, the voltage at F rises and current flows through resistor R5 and capacitor C2, thus adding to the Zener diode current in the base circuit of transistor T1. This has the effect of increasing the current through T1 and decreasing the current through T2 still further. This effect is cumulative, and the circuit quickly reaches the condition when T1 is fully-on and T2 fully-off.

As capacitor C2 charges, the feedback current falls and eventually reaches a value at which the combination of Zener diode current and feed-back current in the base circuit of T1 is no longer great enough to keep T1 fully-on. Current then begins to flow again in the base circuit of T2, so that field current again begins to flow through T2.

The voltage at terminal F now commences to fall, reducing the feed-back current eventually to zero. As T2 becomes yet more conductive, and the voltage at F falls further, current in the feed-back circuit reverses in direction, in effect reducing still further the base current in T1.

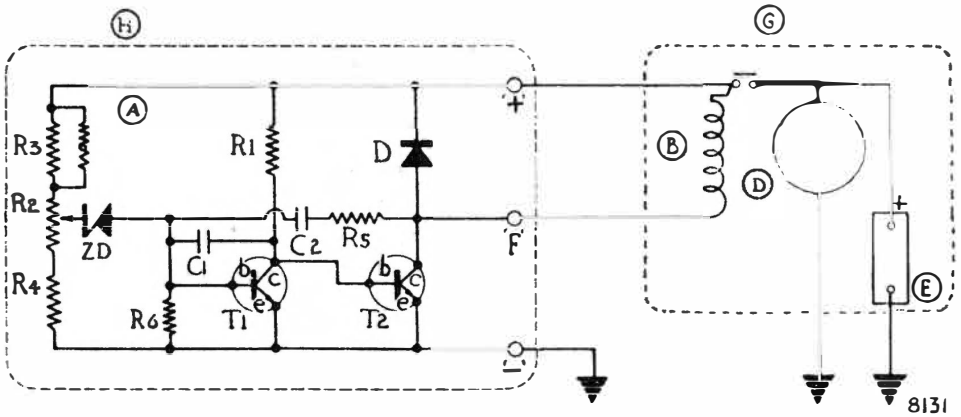

A THERMISTOR
B ROTOR FIELD WINDING
D STATOR WINDING (PART OF CIRCUIT G)
E BATTERY
G ALTERNATOR AND BATTERY CIRCUIT
H CONTROL UNIT CIRCUIT

Fig. 22. *Circuit diagram of control unit and alternator connections*

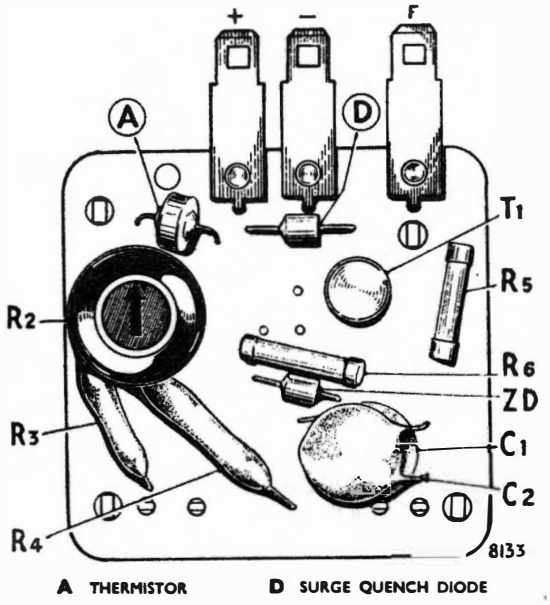

Fig. 23. *Component layout of control unit*

This effect also is cumulative and the circuit reverts to the condition where T1 is fully-off and T2 fully-on. This condition is only momentary, since C2 quickly charges to the opposite polarity, when feed-back current is reduced and current again flows in the base of T1.

The circuit thus oscillates, switching the voltage across the alternator field winding rapidly on and off. This method of operation results in considerably lower power dissipation.

Because switching is achieved so rapidly, any sudden collapse of the field current would result in a very high induced voltage being applied to transistor T2. The latter is protected by means of the surge quench diode D connected across the field winding.

This also serves to provide a measure of field current smoothing, since the current continues to flow in the diode after the excitation voltage is removed from the field. This current decays by only a small amount before the excitation is again applied.

The elimination of radio interference caused by rapid switching is achieved by connecting condenser C1 between the base and collector terminals of T1 to provide negative feed-back.

At high temperatures, a small leakage current may flow through the Zener diode even though the latter is in the nominally non-conductive state. Resistor R6 provides a path for this leakage current which otherwise would flow through T1 base circuit and adversely affect the regulator action.

Provision is made for the automatic compensation of setting to meet changes in ambient temperature. This takes the form of a thermistor connected in parallel with resistor R3.

The thermistor is a device whose resistance increases as the temperature falls, and vice versa. Any alteration in its ohmic value will modify the voltage distribution across the potential divider, and thus affect the value of the alternator output voltage at which the Zener diode begins to conduct, so matching the changes which take place in battery terminal voltage as the temperature varies.

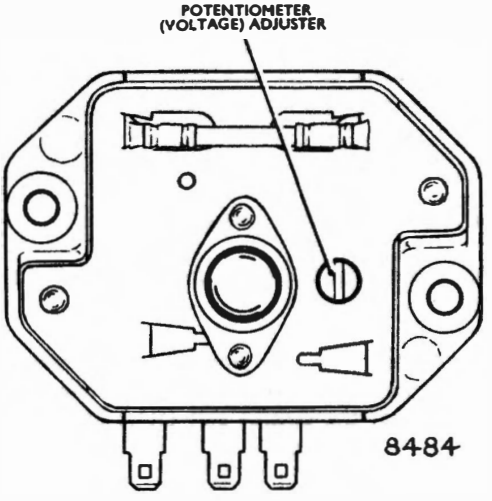

Fig. 24. *Rear view of 4TR Control Box showing potentiometer (voltage) adjuster*

SERVICING

Several important points should be borne in mind when checking or adjusting the Lucas 4TR alternator voltage control unit in service. The 4TR is an electronic unit employing silicon semi-conductor devices, all moving parts being eliminated, and as such its characteristics differ from those associated with the vibrating-contact electromagnetic types, although in effect its action is similar.

Consequently, the procedures for checking or adjusting it in service are different from the well known methods applied to the vibrating contact types.

The first important point to remember is that the 4TR voltage setting must be checked or adjusted under closed-circuit conditions. Secondly, the alternator must be under load (approximately 2 amps.) during the time the regulating voltage is checked or adjusted. And thirdly, the vehicle battery must be in a fully-charged condition in order to ensure accurate checking or adjustment of the regulating voltage.

Test instrument required

A direct-current voltmeter with scale 0 to 20 volts. The meter should be a good quality moving-coil type, with a scale such that accurate readings to within ·4 of a volt can be made. If available, the ideal meter to use would be a suppressed zero type, scale 12 to 15 volts.

In service it is only possible to check or adjust the voltage setting of the 4TR. If the voltage setting requires adjustment and cannot be set within the stated limits or, is unstable, the only alternative is to fit a replacement unit.

Checking the voltage setting

Before proceeding to check the control unit ensure that:—

(*a*) The alternator fan belt tension and associated wiring connections are satisfactory (it is important to ensure that the control unit cables have not been crossed or reversed).

(*b*) The vehicle battery is in a fully-charged state (if necessary a substitute battery should be used for carrying out these tests).

(*c*) Run the alternator at charging speed for eight minutes. (This stage applies when bench testing, or testing on the vehicle).

Assuming that the conditions in (*a*), (*b*) and (*c*) are satisfactory, proceed to check the voltage setting as follows:—

1. Leave the existing connections to the alternator and 4TR control unit undisturbed.

2. Connect the voltmeter leads across the terminal posts of the battery.

3. Switch on the side and tail lamps, start the engine, and slowly increase the engine speed until the alternator is running at approximately 3,000 r.p.m. (1,600 engine r.p.m.).

   The meter should register between the following limits:—

   Voltage setting at 3,000 r.p.m. alternator speed (or 1,600 engine r.p.m.)—

Voltage setting	Ambient temperature
13·9 to 14·3 volts	20°C. (68°F.) to 26°C. (78°F.)

The meter pointer should remain steady and indicate a voltage within the stated limits. The unit can be adjusted to control at the correct voltage (see "Adjusting") providing the reading on the meter has risen to a value slightly above battery terminal voltage, before finally registering a steady value, which may be outside the stated limits.

If, however, the voltmeter reading remains unchanged (at battery terminal voltage) or, conversely, increases in an uncontrolled manner then the control unit is faulty and, as its component parts are not serviced individually, a replacement unit must be fitted.

Adjusting the voltage setting

1. Stop the engine and withdraw the control unit mounting screws.

2. Invert the unit and chip away the sealing compound which conceals the potentiometer adjuster (Fig. 24).

3. Check that the voltmeter is still connected across the battery main terminals.

4. Start the engine and, while running the alternator at 3,000 r.p.m. turn the potentiometer adjuster slot, using a small wide-bladed screwdriver, clockwise to increase the voltage setting or anti-clockwise to decrease it, until the required setting is obtained.

Be careful when making this adjustment, a small amount of adjuster movement causes an appreciable difference in the voltage reading. Re-check the setting by first stopping the engine and then again running the alternator at 3,000 r.p.m. If control unit regulates satisfactorily after the adjustment has been made, refit the unit to mounting point. No attempt should be made to reseal the potentiometer adjustment. Any undue heat applied to this point may damage the unit.

Effects of broken external connections to control unit:

Connections		Effect
Terminal "+"	...	System voltage uncontrolled
Terminal "F"	...	No excitation
Terminal "—"	...	No excitation

Effects of reversed connections to control unit:

Connections		Effect
"+" and "F" ...	...	No output
"+" and "—"	...	Control unit may be damaged
"F" and "—" ...	...	System voltage uncontrolled

STARTER MOTOR

Lucas M35G

DESCRIPTION

The starter motor is a four-pole, four-brush machine having an extended shaft to carry the engine engagement gear or starter drive. This motor is controlled by a solenoid switch located in the engine compartment and operated by the ignition key on the instrument panel.

In an emergency or for testing purposes, the solenoid can be operated by hand by pressing the rubber cap covering the plunger.

On cars fitted with automatic transmission the starter solenoid has a metal cap over its plunger, to prevent operation other than by the ignition key.

MAINTENANCE

The following checking procedure should be carried out periodically whilst the starter motor is in service.

1. Check the fixing bolts for tightness.
2. Remove the metal band cover and blow out any dust or sediment with clean compressed air.
3. Remove any dirt which may remain on the brushgear, by applying a petrol-moistened cloth.
4. Polish the commutator with a dry fluffless cloth and refit the metal band cover.
5. Keep all electrical connections clean and tight. Any which may have become dirty must be cleaned and the contacting surfaces smeared with petroleum jelly.

TESTING THE STARTER MOTOR

Preliminary checks on car

1. If the starter motor is heard to operate but does not crank the engine, the starter pinion assembly is seized or damaged.
2. Switch on the headlamps and operate the starter control. If the lights become dim and the starter motor is not heard to operate, the armature is taking current but is not rotating because of seizure or the pinion being meshed permanently with the flywheel.
3. If the headlamps retain their full brilliance when the starter control is operated, a fault exists in the starter circuit or switch.
4. If the starter motor operates but is sluggish, a fault exists in the battery or cable connections, or the engine may be partially seized.

Starter cranking circuit test

The most convenient method of testing the circuit is by taking voltage drop readings, using a low range voltmeter. This procedure will locate any excessive resistance due to poor connections or bad cables, which would prevent the delivery of the normal amount of current to the starter motor.

For the purpose of the test, it will be necessary to disconnect the contact breaker lead from the ignition coil to prevent the engine starting. Before carrying out the test, ensure that the battery is in good condition and fully charged.

Voltage drop readings:

1. Using a low range voltmeter, connect the negative lead of the voltmeter to the starter terminal, and the positive lead to the positive terminal of the battery. Operate the starter switch and note the voltmeter reading.
2. Connect the positive lead of the voltmeter to the starter commutator end bracket, and the negative lead to the negative terminal of the battery. Operate the starter switch and again note the voltmeter reading.

The sum of these two readings must not exceed ·5 volt.

An unduly high reading means that there is excessive resistance in the starter circuit, in which event each part of the circuit should be checked in turn with particular attention to the solenoid switch connections and all earth connections including the engine bonding strip.

On completion of the test, restore the original ignition connections.

Starter cranking voltage test

This test should be made after any defects previously located have been corrected. It is a valuable test because it gives an indication of the power absorbed in the starter, and also determines whether sufficient voltage is available to operate the ignition system when the starter motor is in operation.

1. Disconnect the contact breaker lead from the ignition coil to prevent the engine starting.
2. Using a zero to 20 range voltmeter, connect the positive lead of the voltmeter to the starter main terminal and the negative lead to an earth point on the starter mounting bracket.
3. Close the starter switch to crank the engine for a few seconds, and note the voltmeter reading.

The starter motor should crank the engine at a good rate of speed, and the voltage reading should be not less than 9·5 volts. On completion of the test, restore the original ignition connections.

Measuring light running current (on bench)

Secure the starter motor in a vice, then connect the motor in series with a starter switch, a zero to 800 range ammeter, and a 12 volt battery in good condition and fully charged.

Use heavy duty starter cable in the circuit, and utilise a fixing lug on the starter motor as an earthing point. Operate the switch and note the reading on the ammeter. The motor should run at a high speed, and the light running current should be 45 amperes.

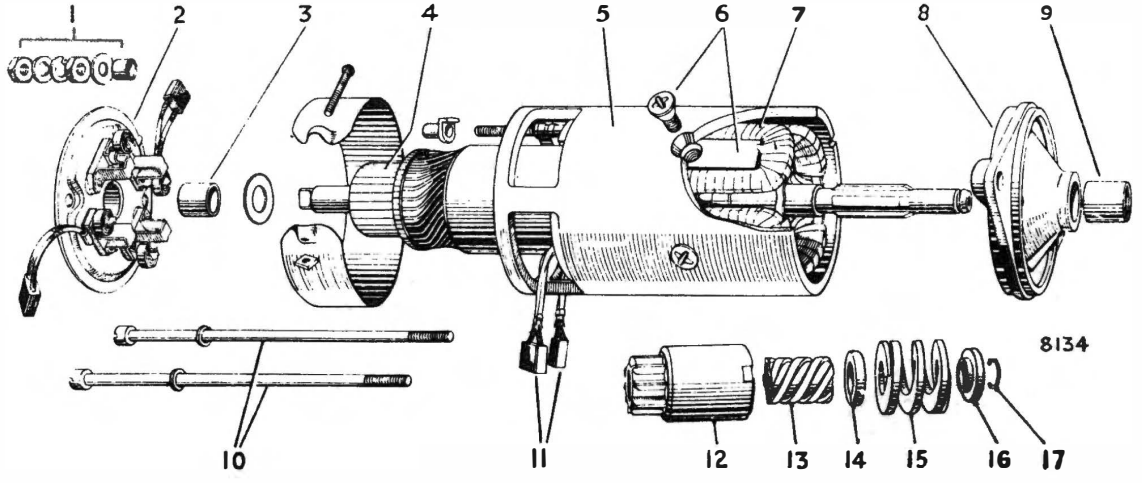

1. TERMINAL NUTS AND WASHERS
2. COMMUTATOR END BRACKET
3. BEARING BUSH
4. COMMUTATOR
5. YOKE
6. POLE SHOES AND SCREWS
7. FIELD COILS
8. DRIVE-END BRACKET
9. BEARING BUSH
10. THROUGH BOLTS
11. INSULATED BRUSHES
12. PINION AND BARREL ASSEMBLY
13. SCREWED SLEEVE
14. BUFFER WASHER
15. MAIN SPRING
16. SHAFT COLLAR
17. JUMP RING

Fig. 25. *Exploded view of starter motor and drive*

SERVICING THE STARTER MOTOR (Fig. 25)

To remove

1. Disconnect the earth terminal on the battery to avoid any danger of short circuits.
2. Remove the heavy cable from the starter motor.
3. Remove the mounting bolts and withdraw the starter motor from the engine.

Dismantling

1. Remove the metal band cover, hold back the brush springs and lift the brushes from their holders.
2. Remove the nuts from the terminal post which protrudes from the commutator end bracket.
3. Unscrew the two through bolts from the commutator end bracket and remove the commutator end bracket from the yoke.
4. Remove the driving end bracket with armature and drive from the yoke.
5. If it is necessary to remove the drive end bracket from the armature, it can be slid off after the drive has been dismantled.

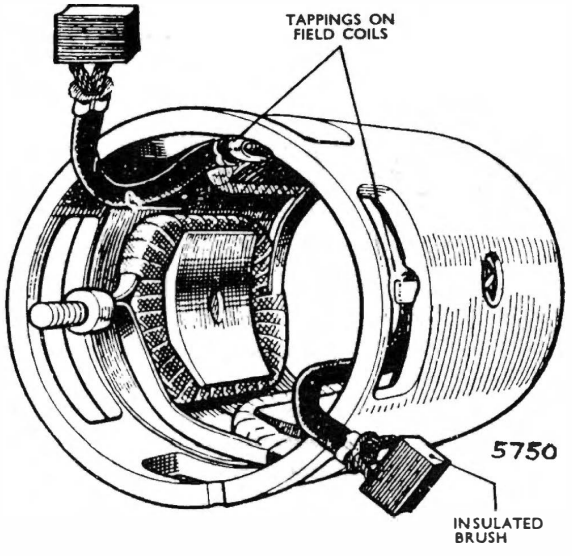

Fig. 26. *Insulated brush connections to field coil tappings*

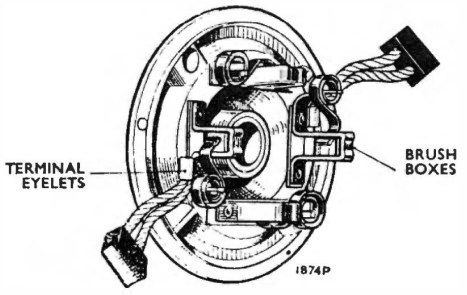

Fig. 27. *Commutator end bracket earth brush connections*

Brushgear (Figs. 26 and 27)

Check that the brushes move freely in their holders by holding back the brush springs and pulling gently on the flexible connectors. If movement is sluggish, remove the brush from its holder and clean its sides with a fluffless petrol-moistened cloth. Replace the brush in its original position. Brushes which are worn to $\frac{5}{16}$ in. (8 mm.) in length must be renewed. To renew the brushes, proceed as follows:—

Insulated brushes:

1. Cut off the original brush flexible $\frac{1}{8}$ in. (3 mm.) from the aluminium.
2. Clean and tin the original resistance-brazed joint.
3. Open the loop of the replacement brush flexible lead.
4. Tin the loop, taking great care not to allow any solder to run towards the brush.
5. Place the original joint within the loop, and squeeze the loop, then solder.

Providing the necessary equipment is available for re-fitting and tightening the pole-shoes, the foregoing procedure will be found easier to carry out if the field coils are removed from the yoke.

Earth brushes:

1. Unsolder the brush flexible lead from the clip located beneath the brush box mounting.
2. Open the clip, insert the replacement flexible lead, squeeze the clip and re-solder.

The brushes are pre-formed so that bedding to the commutator is unnecessary. Check the tension of the brush springs by means of a spring scale. The correct tension is 30 to 34 oz. (·85 to ·96 kg.). New springs must be fitted if the tension is low. Check the tension of any new spring and ensure that it makes contact with the centre of the brush top..

Commutator

A commutator in good condition will be smooth and free from pits and burned spots. Clean the commutator with a petrol-moistened cloth. If this is ineffective, carefully polish with a strip of fine glass paper, while rotating the armature.

To remedy a badly worn commutator, dismantle the starter drive as described in later paragraphs, and remove the armature from the end bracket. Mount the armature in a lathe, rotate at high speed and take a light cut with a very sharp tool. Do not remove any more metal than is necessary. Finally polish with very fine glass paper.

The insulators between the commutator segments must not be undercut.

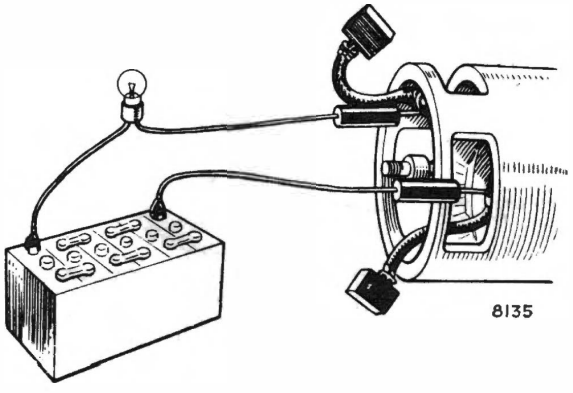

Fig. 28. *Testing field coils for continuity*

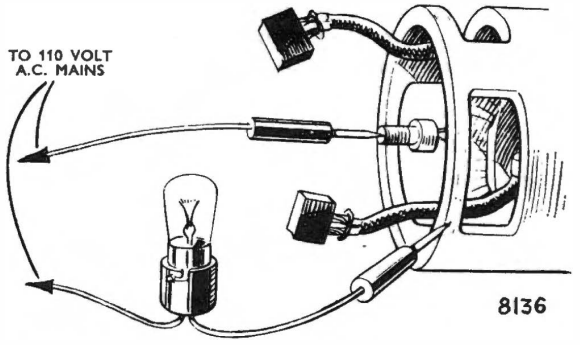

Fig. 29. *Testing field coil insulation*

Armature

An armature can be tested for open circuits, short circuits, and earthed circuits, by following the procedure described in earlier paragraphs for the generator.

Before carrying out the tests, check for lifted commutator segments and loose turns in the armature winding.

These may be due to the starter motor having remained engaged while the engine was running, thus causing the armature to be rotated at excessive speed.

A damaged armature must always be renewed. No attempt should be made to machine the armature core or to true a distorted armature shaft. An indication of a bent shaft or a loose pole shoe may be given by scored armature laminations.

Field coils (Figs. 28 and 29)

Continuity test:

If the lamp fails to light in the following test, an open circuit in the field coils is indicated and the defective coils must be renewed.

1. Connect a 12 volt battery and bulb in series with two pointed test prods.

2. When the prods are placed on the brush tappings, the bulb should illuminate.

Lighting of the lamp does not necessarily indicate that the field coils are in order. It is possible that a field coil may be earthed to a pole shoe or to the yoke.

Insulation test:

Connect a 110 volt a.c. test lamp between the terminal post and a clean part of the yoke. Lighting of the lamp indicates that the field coils are earthed to the yoke and must be renewed.

Renewing the field coils:

This operation should be carried out with the aid of a pole-shoe screwdriver as illustrated earlier in this Section for the generator.

1. Using a pole-shoe screwdriver, unscrew the four pole-shoe retaining screws.

2. Remove the insulation piece which is fitted to prevent the inter-coil connectors from contacting the yoke.

3. Mark the yoke and pole shoes in order that they may be refitted in their original positions.

4. Draw the pole shoes and coils out of the yoke and lift off the coils.

5. Fit the new field coils over the pole shoes and place them in position inside the yoke. Ensure that the taping of the field coils is not trapped between the pole shoes and the yoke.

6. Locate the pole shoes and field coils by lightly tightening the fixing screws.

7. Refit the insulation piece between the field coil connections and the yoke.

8. Finally, tighten the screws by means of the pole-shoe screwdriver.

Bearings (Fig. 30)

Bearings which are worn to such an extent that they will allow excessive side play of the armature shaft must be renewed. To renew the bearing bushes proceed as follows:—

1. Press the bearing bush out of the end bracket.

2. Press the new bearing bush into the end bracket, using a shouldered highly-polished mandrel of the same diameter as the shaft which is to fit into the bearing. Porous bronze bushes must not be opened out after fitting, or the porosity of the bush may be impaired.

Before fitting a new porous bronze bearing bush, it should be completely immersed for 24 hours in clean thin engine oil. On occasions of urgency, this period may be shortened by heating the oil to 100°C. (212°F.) when the time of immersion may be reduced to 2 hours. The oil must be allowed to cool before removing the bearing from the oil.

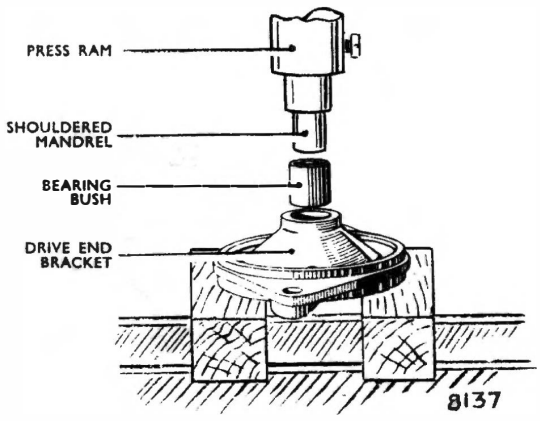

Fig. 30. *Fitting bearing bush to drive end bracket*

STARTER DRIVE (Refer to Fig. 25)

The pinion and barrel assembly is mounted on a screwed sleeve, which is carried on splines on the armature shaft.

The sleeve is so arranged that it can move along the shaft against a compression spring to reduce the shock loading at the moment engagement takes place.

When the starter switch is operated the armature shaft and screwed sleeve rotate. Owing to the inertia of the pinion the latter is caused to move along the sleeve until the pinion and barrel assembly comes into engagement with the flywheel ring. The starter will then turn the engine.

As soon as the engine fires and commences to run under its own power the flywheel will be driven faster by the engine than the starter. This will cause the pinion and barrel assembly to be screwed back along the sleeve, so drawing the pinion out of mesh with the flywheel teeth. In this manner the drive safeguards the starter against damage due to being driven at high speeds.

A pinion restraining spring is incorporated in the drive. This spring prevents the pinion vibrating into mesh when the engine is running.

Routine maintenance

If any difficulty is experienced with the starting motor not meshing correctly with the flywheel, it may be that the drive requires cleaning. The pinion and barrel assembly should move freely on the screwed sleeve; if there is any dirt or other foreign matter on the sleeve it must be washed off with paraffin.

In the event of the pinion becoming jammed in mesh with the flywheel, it can usually be freed by turning the starter motor armature by means of a spanner applied to the shaft extension at the commutator end.

Dismantling and reassembling

Having removed the armature as described earlier in this Section, the drive can be dismantled as follows:—

To remove the drive assembly, compress the main spring (using a suitable clamping device) in order to release the jump ring and shaft collar. The main spring, buffer washer, screwed sleeve and pinion and barrel assembly (which includes the pinion restraining spring and a control nut) can now be withdrawn. If either the barrel assembly or the screwed sleeve require renewal, they must always be renewed together.

LIGHTING AND INDICATOR SYSTEM

F700 HEADLAMPS (Fig. 31)

Models employing two separate headlamps incorporate 7 in. (17·8 cm.) diameter sealed beam light units. Each light unit is of all-glass construction with an internally aluminised glass reflector fused to the front lens.

Two filaments are contained in each unit, one for the main beam and the other for the dipped beam. These are installed with absolute care and precision before they are finally sealed in the gas-filled chamber which comprises the light unit.

The fact that the light unit is completely sealed, ensures that the reflecting surface is protected to the extent of producing continual reflective efficiency without deterioration.

In the event of headlamp failure and where the cause is not due to loose or broken connections, the fault will lie in the light unit, in which case the unit will require renewal.

Dismantling

Gently prise the front (painted) rim from its securing clip which is positioned at the lower and "peakless" half of the rim.

Remove the three cross-head screws securing the retaining rim, which are accessible on removal of the dust excluding rubber; the Sealed Beam unit can then be withdrawn and detached from the slotted connector-plug.

In certain countries where ordinary filament bulbs are retained, the procedure for removal will be almost identical to that given for a Sealed Beam unit, except that after detaching the slotted connector-plug, the bulb is removed by compressing the two ends of its spring retaining-clip so that the clip is released from the pair of securing tabs which are formed on the bulb seating-ring.

Beam adjustment (Refer to Fig. 3)

Each headlamp is provided with two adjusting screws, the adjusting screw (7) provides adjustment in the vertical plane whilst the adjusting screw (5) provides adjustment in the lateral plane.

This type of sealed headlamp is so designed that adjustment can be accurately undertaken using a spirit-level type beam setter. Three glass "aiming pads" take the form of projections moulded integrally around the outer front edge of the lamp glass, where their purpose is to provide a reference plane for beam aiming.

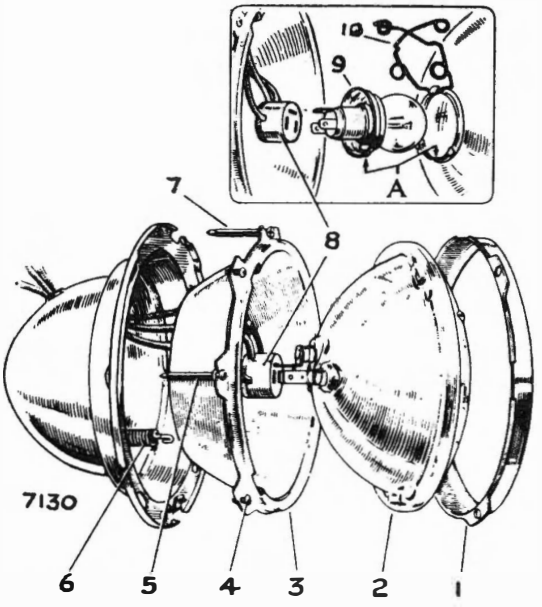

1. RETAINING RIM
2. SEALED BEAM LIGHT UNIT
3. SEATING RIM
4. RETAINING RIM SCREW
5. LATERAL ADJUSTING SCREW
6. TENSIONING SPRING
7. VERTICAL ADJUSTING SCREW
8. SLOTTED CONNECTOR PLUG
9. BULB } EUROPEAN TYPE
10. BULB RETAINER }
A. LOCATION FOR BULB

Fig. 31. *F700 headlamp details*

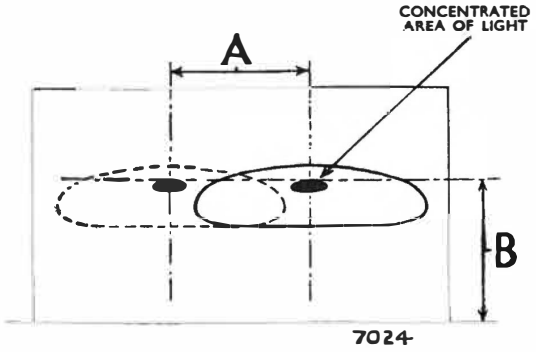

A DISTANCE BETWEEN HEADLAMPS CENTRE

B HEIGHT OF HEADLAMP ABOVE GROUND

Fig. 32. *Headlamp alignment*

It is desirable to use a reputable brand of spirit-level type beam setter if the best standards of accuracy and speed are to be obtained. Advice is available on application to the Rootes Group Development Section at Coventry, in respect of all factory approved equipment.

Should a spirit-level type beam setter not be available, the use of an optical-type beam setter can be employed, providing it is of the type (Lucas No. 571119).

If the use of neither type of beam setter is available, a fair degree of accuracy can be attained by use of an aiming board (Refer to Fig. 32).

Beam setting using the aiming board

Proceed as follows:—

1. Ensure that the car is parked (handbrake on) on level ground.
2. Ensure that the front of the car is parallel with the aiming board which is to be positioned at a distance of 25 ft. (7·62 m.) from the car.
3. Either load the car with two adults or simulate this load by adding weights to the car.
4. Clean the glass of one lamp.
5. Adjustment is to be commenced at one lamp; mask the remaining lamp.
6. Turn the adjusting screws clockwise to their full extent.
7. With the lamp illuminated in the main beam condition, turn the adjusting screws anti-clockwise as necessary until the required setting is achieved.
8. Remove the mask from the remaining lamp and mask the lamp which has been set.
9. Clean the glass of the lamp.
10. Turn the lamp adjusting screws clockwise to their full extent.
11. With the lamp illuminated in the main beam condition turn the adjusting screws anti-clockwise as necessary until the required setting is achieved.
12. Recheck the setting of both lamps.

F575 DUAL HEADLAMPS (Fig. 33)

Two pairs of headlamps are employed in this arrangement, each pair being of 5¾ in. (12·8 cm.) diameter. The inboard lamps are fitted with single main beam filaments whilst the outboard lamps are each fitted with a meeting beam filament and a supplementary main beam filament.

When full lighting is required, the inboard lamps each give 37½ watts of main beam driving light, which is supplemented by the outboard lamps providing light of similar power but directed in a fan-like shape closer to the car. Main beam driving, therefore, provides lighting with a total power of 150 watts.

Dipping the lights extinguishes the inboard lamps and dips the outboard lamps on to 50-watt filaments to provide 100 watts of carefully distributed light.

The lamp glass, reflector and filament are manufactured as a complete unit which cannot be dismantled; therefore, no attempt should be made to do so.

In the event of failure, the complete headlamp assembly must be renewed, this does not apply to vehicles in certain export territories where the outboard lamp units

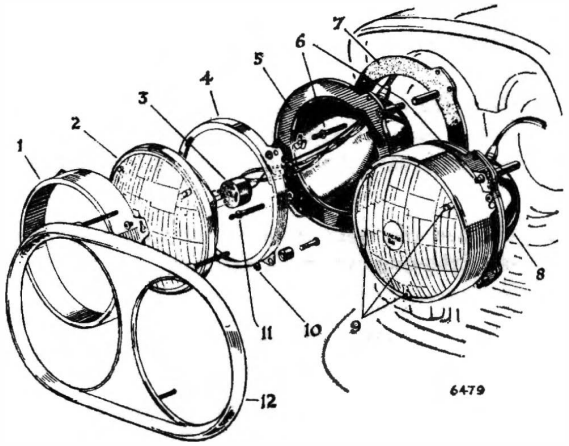

1. FRONT RIM
2. LAMP UNIT (2A)
3. ADAPTER
4. SEATING RIM
5. LAMP BODY
6. BEAM ADJUSTMENT SCREW (VERTICAL)
7. GASKET
8. LAMP BODY
9. AIMING PADS
10. RETAINING RING
11. BEAM ADJUSTMENT SCREW (LATERAL)
12. BEZEL

Fig. 33. *F575 dual headlamps—exploded view*

are fitted with pre-focus bulbs which can be renewed, in the manner described under the heading "Dismantling".

For identification purposes on home market vehicles, the outboard lamp units have the marking "2A" on the glass whilst the inboard units have "1A" marked on the glass.

Dismantling

Remove the lamp bezel retaining screws and detach the bezel from the lamps.

Slacken the three cross-head screws securing the lamp and rim and turn the rim slightly in an anti-clockwise direction which will align the larger end of the three key-hole slots, in the periphery of the rim, with the screw heads.

Release the rim and lamp unit. The lamp can be completely removed after disconnecting the wiring adaptor.

In territories where bulbs are renewable in the outboard headlamps, the bulb is removed by first compressing the two ends of the retaining spring attached at the rear of the reflector, and then withdrawing the bulb complete with its holder.

Beam adjustment (Refer to Fig. 33)

Each headlamp is provided with adjusting screws which pivot about a rubber buffer. The adjusting screw (6) provides adjustment in the vertical plane whilst the adjusting screw (11) provides adjustment in the lateral plane.

This type of sealed headlamp is so designed that adjustment can be accurately undertaken using a spirit-level type beam setter. Reference to the illustration indicates three glass "aiming pads" (9). These take the form of projections moulded integral around the outer front edge of the lamp glass where their purpose is to provide a reference plane for beam aimnig.

It is desirable to use a reputable brand of spirit-level type beam setter if the best standards of accuracy and speed are to be obtained. Advice is available on application to the Rootes Group Development Section at Coventry, in respect of all Factory approved equipment.

Should a spirit-level type beam setter not be available, the use of an optical-type beam setter can be employed providing it is of the type (Lucas No. 571119) that can be adjusted in both horizontal and vertical planes to allow No. 2A units to be set with the meeting beam 2° Down and 2° Left, and No. 1A units ¼° Down, 0° Left.

WARNING: The 2A units must NEVER be set under main beam conditions.

If the use of neither type of beam setter is available, a fair degree of accuracy can be attained by the use of aiming boards (Refer to Figs. 34 to 37) which are positioned at a distance of 25 ft. (7·62 m.) from the front of the vehicle and parallel with the rear axle—the floor being flat and level with the base of the aiming board. For 2A lamps which have renewable bulbs fitted, either the special optical-type beam setter (see above) or the aiming board method can be employed.

Using the aiming board method proceed as follows:—

1. Ensure that the car is parked (handbrake on) on level ground.

2. Ensure that the front of the car is parallel with the aiming board which is to be positioned at a distance of 25 ft. (7·62 m.) from the car.

   (V) is the vertical centre line straight ahead of the lamp centre and (H) is the horizontal centre-line which is the same height as the lamp centre.

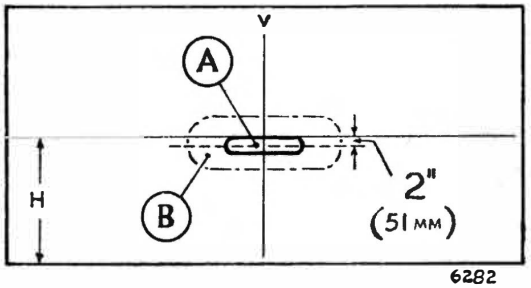

A. "HOT SPOT" B. HIGH INTENSITY ZONE

Fig. 34. *Setting diagram inner lamps*

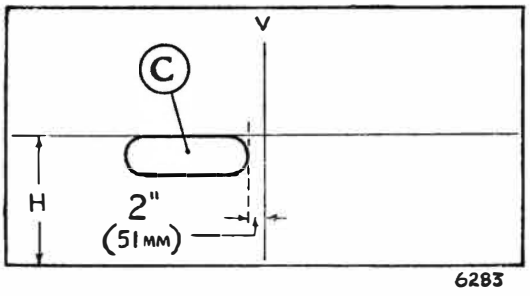

C. HIGH INTENSITY ZONE

Fig. 35. *Setting diagram outer lamps (left-hand rule of the road)*

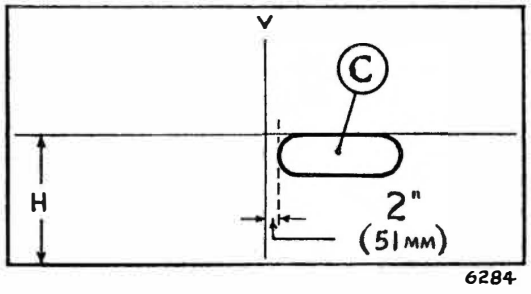

C. HIGH INTENSITY ZONE

Fig. 36. *Setting diagram outer lamps (right-hand rule of the road)*

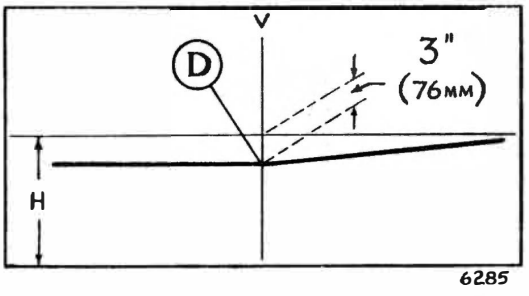

INCLINED AND HORIZONTAL PORTIONS OF BEAM TOP TO MEET AT "D"

Fig. 37. *Setting diagram outer lamps (European type vertical dip)*

3. Either load the car with two adults or simulate this load by adding weights to the car.
4. Remove the bezel from the headlamps.
5. Clean the glass of the inboard lamp.
6. Adjustment is to be commenced at one inboard lamp; mask the remaining lamps.
7. Turn the adjusting screws inwards to their full extent.
8. With the lamp illuminated in the main beam condition, turn the adjusting screws anti-clockwise as necessary until the required setting is achieved (Refer to Fig. 34).
9. Remove the mask from the adjacent outboard lamp and mask the inboard lamp.
10. Clean the glass of the outboard lamp.
11. Turn the outboard lamp adjusting screws inwards to their full extent.
12. With the lamp illuminated in the dipped condition, turn the adjusting screws anti-clockwise as necessary until the required setting is achieved (Refer to Figs. 35, 36 and 37).
13. Carefully refit the headlamp bezel without disturbing the setting.
14. Re-check the setting of both the lamps.
15. Repeat operations 3 to 14 for the remaining lamps.

F700/F575 DUAL HEADLAMPS

Two pairs of unequal diameter headlamps are employed in this arrangement. The larger outboard lamp is shown in Fig. 31 and the smaller inboard lamp distinguished by its single cable is shown in Fig. 33.

To remove the larger lamp, withdraw the bezel after removing its fixing screw, then proceed with the remainder of the dismantling procedure given for the F700 type.

To remove the smaller lamp, detach the outer grill surround and slide it from its location behind the centre grill, then proceed with the remainder of the dismantling procedure given for the F575 dual headlamps.

The electrical circuit is identical with that for the F575 dual headlamps and the beam setting procedure is also the same.

SIDE LAMPS AND FRONT FLASHER BULBS

Lucas L662 (Fig. 38)

To renew a defective bulb, remove the two screws and detach the white and amber lenses. Renew the defective bulb(s) and refit the lenses, making sure that the rubber seat is correctly located; secure the lenses with the two screws.

Lucas L722 (Fig. 39)

The servicing instructions given for the Lucas L662 also apply to this type.

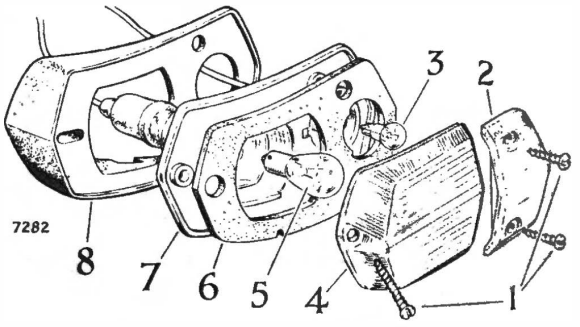

1. RETAINING SCREWS
2. CLEAR LENS
3. CAPLESS SIDE LAMP BULB
4. AMBER LENS
5. FLASHER BULB
6. LENS SEATING
7. LAMP BODY
8. RUBBER PLINTH

Fig. 39. *L722 side and flasher lamp*

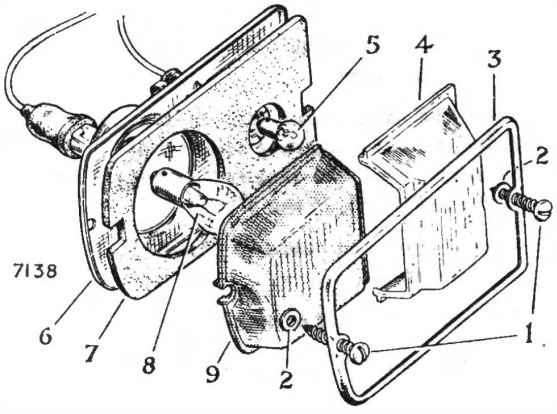

1. RETAINING RIM SCREWS
2. RUBBER WASHER
3. RETAINING RIM
4. CLEAR LENS
5. SIDE LAMP BULB
6. LAMP BODY
7. LENS SEATING
8. FLASHER BULB
9. AMBER LENS

Fig. 38. *L662 side and flasher lamp*

Lucas L756 (Fig. 40)

To renew a defective bulb, pull the particular bulb holder from the rear of the lamp unit (under the bonnet). The front lens may be removed by pressing downwards to clear the top locating lug and then easing the top of the lens outward and upward to clear the two bottom locating lugs.

To remove the lamp unit, remove the two securing nuts from the rear of the unit and draw the unit forwards.

STOP, TAIL AND REAR FLASHER LAMPS

Lucas L654 (Fig. 41)

The light units have individual bulb-holders which are a push fit in the lamp body. The bulbs are accessible for renewal from within the luggage boot. To renew the bulbs, it is only necessary to pull the bulb holders from the lamp body, when the defective bulb can be withdrawn. To renew the lenses, it will be necessary to remove the complete lamp unit to obtain access to the securing self-tapping screws.

The complete lamp unit can be removed and dismantled by unscrewing the two securing nuts from within the boot. Reassembly is a reverse of the dismantling procedure, but care should be exercised to properly locate the rubber sealing washers.

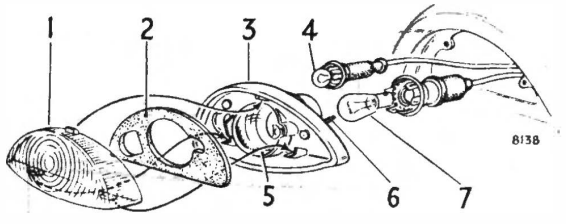

1. FRONT LENS
2. LENS SEAL
3. LAMP BODY
4. SIDELIGHT BULB
5. AMBER HOOD
6. FIXING STUDS
7. FLASHER BULB

Fig. 40. *L756 side and flasher lamp*

Lucas L692, L691 and RER31 (Fig. 42)

These are separate units fitted to form a cluster on an oval-shaped panel. To renew any one bulb, remove two securing screws from the particular lens and withdraw the lens. The bulb can now be removed and a new one fitted. The stop/tail lamp has a double filament bulb which is formed with offset locating lugs to ensure correct assembly.

To remove the lamp units, unscrew the nuts at the rear of the lamps, disconnect the cables at their Lucar connectors and withdraw the lamps. Reassembly is a reverse of the dismantling procedure, but care should be exercised to properly locate the rubber sealing washers.

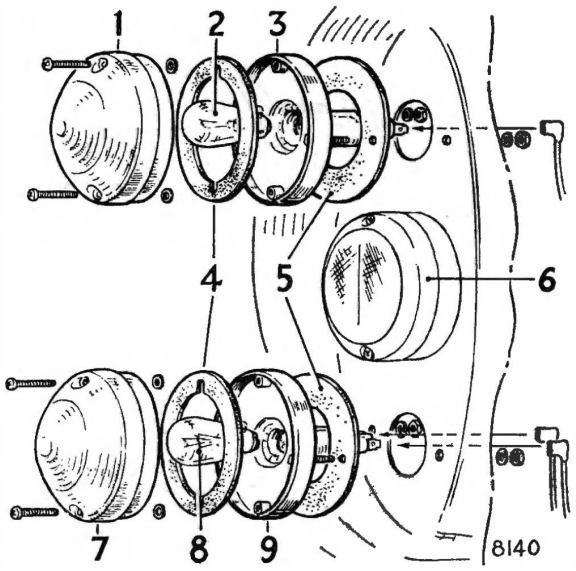

1. AMBER LENS
2. FLASHER BULB
3. LAMP BODY (FLASHER)
4. LENS SEAL
5. LAMP SEAL
6. REAR REFLECTOR
7. RED LENS
8. STOP/TAIL BULB
9. LAMP BODY (STOP/TAIL)

Fig. 42. *L692, L691 and RER31 lamp arrangement*

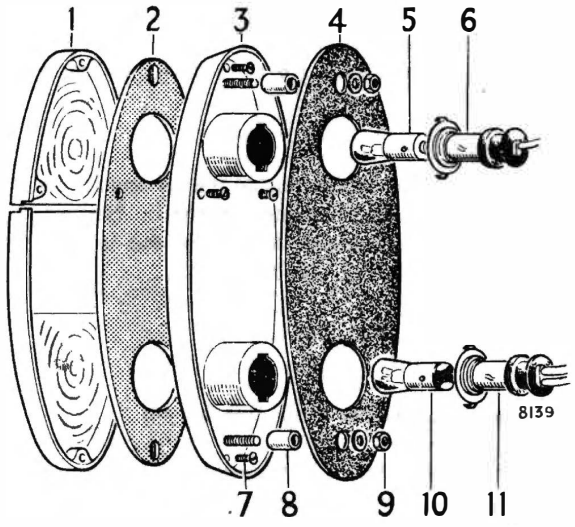

1. LENS (AMBER TOP) (RED BOTTOM)
2. LENS SEAL
3. LAMP BODY
4. LAMP SEAL
5. FLASHER BULB
6. BULB HOLDER
7. FIXING SCREWS
8. DISTANCE PIECE
9. FIXING NUT
10. STOP/TAIL BULB
11. BULB HOLDER

Fig. 41. *L654 stop/tail and flasher lamp details*

Lucas L572 (Fig. 43)

The two-piece lens on this unit can be detached without removing or dismantling the complete unit. To remove the lens, it will be only necessary to undo the four recessed screws, when the lens can be withdrawn. The complete unit is fixed to the rear panel by two hexagon nuts. Access to the nuts is obtained from within the luggage boot. On removing the nuts and disconnecting the cables, the unit can be withdrawn as an assembly.

A double-filament bulb for the stop/tail lamp, and a single filament bulb for the flashing indicator are mounted on a detachable bracket fixed to the rear of the unit by a knurled screw. To renew any one bulb, undo the screw and remove the bracket. The defective bulb can now be withdrawn and a new one fitted.

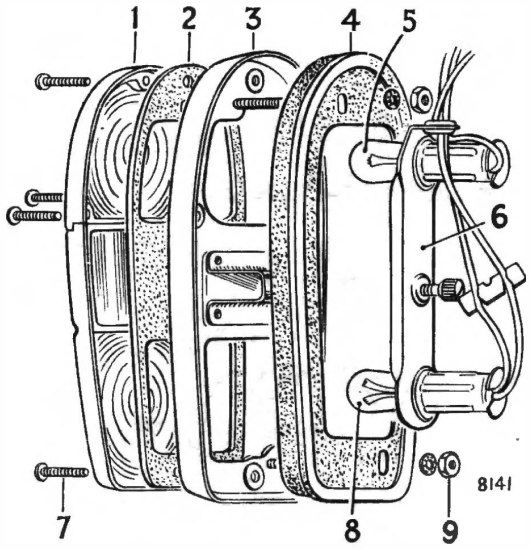

1. LENS (AMBER TOP) (RED BOTTOM)
2. LENS SEAL
3. LAMP BODY
4. LAMP SEAL
5. FLASHER BULB
6. BULB HOLDER ASSEMBLY
7. LENS FIXINGS
8. STOP/TAIL BULB
9. LAMP FIXING NUTS

Fig. 43. *L572 stop/tail and flasher lamp details*

DIRECTION INDICATOR AND HEADLAMP FLASHER

Direction Indicators

The correct operation of direction signals requires that the flasher filament in the lamp bulbs (depending on the position of the switch) flash intermittently whether or not the headlamps, parking lamps, tail lamps or stop lamps are "on".

A correctly operating direction signal will be indicated by a regular intermittent flashing of the green pilot lamp located on facia panel.

If, when the direction indicator is switched on, the warning (or pilot) lamp does not flash in the usual manner but remains unlit, first check that this is not due to filament failure in either the front or rear lamp on that side.

This can be checked by turning the switch to the opposite side—if the pilot lamp now flashes, the circuit is in order and bulb replacement is indicated.

On the other hand, if the pilot lamp still does not flash, inspect the indicator lamps. If these are working normally, failure of the pilot lamp bulb is indicated.

If, however, the indicator lamps are not functioning, it will be necessary to proceed to check the wiring and flasher unit.

The efficiency of the flasher unit may be readily checked by plugging in a known substitute.

The inoperative flasher lamp bulbs should be checked for a burned-out filament. Where it is found that neither lamp has a burned-out filament the wiring between the defective lamp and indicator switch must be checked.

If the direction signal is entirely inoperative, check the fuse (A.4 on fuse box), flasher unit and circuit from the fuse box up through the steering column switch in the order named.

The flasher unit is located inside the car and is plugged into a socket on the underside of the facia. No servicing of the flasher is required, and where this unit breaks down in service it should be renewed.

Operation of flasher unit (See Fig. 44)

This unit depends for its operation on an electro-magnet in conjunction with the linear expansion of a piece of wire which becomes heated as current flows through it. The expanding and contracting of the wire controls the speed at which the armature carrying the moving contact will move, as a result of the pull exerted by the electro-magnet and the sequence of operations is as follows:—

As current flows from terminal "B" to terminal "L" and the lamps *via* the resistance wire and electro-magnet, the wire heats up and expands.

This allows the armature carrying one of the contacts to be attracted to the pole piece of the electro-magnet closing contacts (A) and full voltage is then applied to the lamps *via* the windings of the electro-magnet. Contacts (B) are also closed completing the pilot lamp circuit.

While contacts (A) are closed the resistance wire is short circuited and cools off. The taut section of the resistance wire contracts and pulls back the armature to open contacts (A).

The pilot lamp on the facia panel will not flash unless sufficient current to light the filaments in front flasher lamp and rear flasher lamp is passing through the windings of the electro-magnet to close contacts (B). The flashing pilot lamp, therefore, gives the driver a clear indication that the direction signals are working correctly.

It will be noted that in order to maintain the desired rate of flashing (British Ministry of Transport regulations, 60—120 per minute) the filaments of the front and rear lamps are "pre-heated" *via* the resistance wire during "out" period of the flash.

Headlamp flasher switch

The direction indicator also incorporates the switch for flashing the headlamps, this is achieved by moving the lever stalk towards the steering wheel and in so doing an insulated spring-loaded plunger, operated by the inner end of the lever, is depressed to make switch contact so that the headlamps will illuminate in the main beam condition and will remain so until upward pressure on the lever is released.

When the lever is released the switch will return to the OFF position under the influence of its spring and the headlamps will extinguish.

Headlamp flashing can be accomplished irrespective of the lever position, i.e., whilst using either direction indicator.

When the headlamp flasher system is functioning correctly, each application of the switch lever in the upward direction will produce the main beam condition.

Should any one headlamp fail to illuminate a check is to be made to ensure that the connections to the headlamp are secure, if on inspection the connections are found to be satifactory the suspect lamp unit is to be changed for a unit which is known to be serviceable.

(This does not apply to vehicles in certain export territories where the lamps are fitted with pre-focus bulbs and are renewed in the manner described in earlier paragraphs).

In the event of the headlamps failing to illuminate when the switch is operated, the circuit from the switch to the starter solenoid should be checked. If after test the switch is found to be defective, it must be renewed as the switch cannot be repaired.

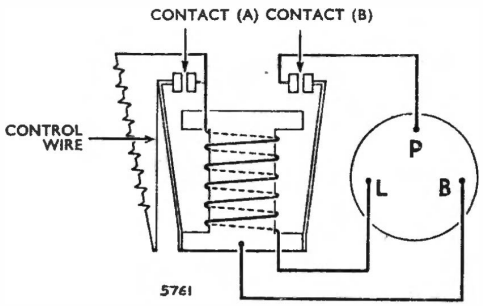

Fig. 44. *Internal connections of flasher unit*

CAUTION:

It is inadvisable to use the headlamp flasher continuously when the headlamps are already in the dipped condition as the excess heat generated by both filaments will greatly lessen the life of the lamp units or bulbs, whichever is appropriate.

HORNS

LUCAS WINDTONE HORN, Model 9H (Fig. 45)

The horns operate on the principle of a resonating air column vibrated by means of a diaphragm which is actuated electro-magnetically by a self-interruptory circuit.

The tonal quality of each horn is adjusted to give its best performance before leaving the manufacturers, consequently, it should require no further attention until it has given a long period of service.

However, in the event of a single or both horns failing to sound satisfactorily, the cause can be diagnosed and rectified as follows:—

Do not dismantle the horn(s) beyond the instructions given in the following paragraphs and on no account is the central locknut or slotted stem to be disturbed on the 9H model horn(s).

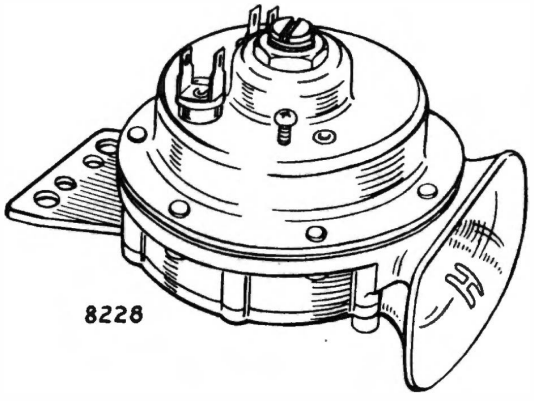

Fig. 45. *Lucas model 9H horn*

Maintenance

If the horn suddenly fails to sound after operating normally the cause is unlikely to be in the horn itself.

First ensure that the cause is not due to such defects as a loose or broken connection in the horn wiring circuit.

A short circuit in the horn wiring will cause the fuse to blow. In this event, examine the wiring to locate the fault and rectify accordingly before renewing the fuse.

Failure of the horn to perform correctly can be attributed to either a discharged battery, faulty or loose connections or loose mounting bolts; check and remedy as found necessary.

If on inspection these points are found to be in order, it is possible that the horn requires adjustment.

Adjustment

Where twin horns are fitted disconnect one whilst carrying out adjustment on the other, at the same time ensuring that the current supply cable does not come into contact with any part of the vehicle metalwork.

Adjustment does not in any way alter the pitch of the note but merely takes up wear of the moving parts.

During adjustment, short out the fuse, otherwise it is liable to blow.

If a horn fails to sound after making an adjustment, release the horn ring immediately. If a horn is removed from the vehicle for the purpose of carrying out adjustment, it is to be held firmly in a vice by the mounting bracket so that the best results in sound are obtained.

Method (i) Adjustment is provided by either a plain or a serrated screw which is located adjacent to the horn terminals. Rotate this screw in an anti-clockwise direction until the horn just fails to sound, then rotate it in the reverse direction for one quarter turn.

Method (ii) If a first grade 0—10 moving coil ammeter is available, connect it in series with the horn. A 9H model horn in correct adjustment will pass 3·0 to 3·5 amperes. Rotate the adjusting screw in a clockwise direction in order to increase the current and in the reverse direction to reduce it until the best performance is obtained within the stated current range.

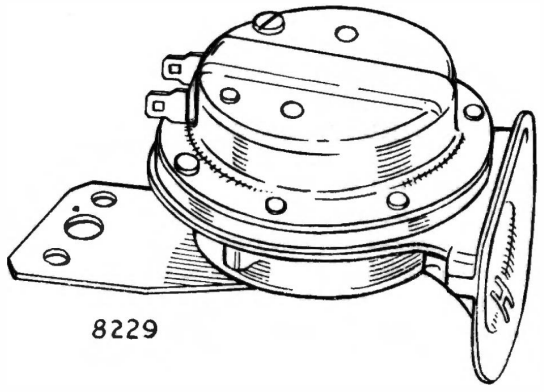

Fig. 46. *Clear Hooter model F725 horn*

CLEAR HOOTER HORN, Model F725 (Fig. 46)

These horns are a riveted assembly and, therefore, cannot be dismantled. If the horns are removed from the vehicle for the purpose of tonal adjustment, they are to be held firmly in a vice by the mounting bracket so that the best results in sound are obtained.

Sound—loss of volume

Normally this condition is caused by insufficient current being drawn by the defective horn in which case the adjusting screw is to be rotated slowly clockwise until the volume of sound is restored, then rotate the adjusting screw slowly anti-clockwise to the point where the volume of sound is just maintained. At no time should the operating current exceed 3·5 amperes.

intermittent operation

Usually this cause can be attributed to that of maladjustment or the presence of foreign matter between the contact points. In this instance the adjusting screw is to be rotated slowly in a clockwise direction for almost one half turn. Should the horn fail to sound after carrying out this adjustment, the screw is to be rotated in the reverse direction until the horn operates at the correct volume, which should occur within 180 degrees either side of the original setting.

Complete failure of sound

In the event of a complete failure, examine the appropriate fuse and the electrical connections in the horn circuit for security and carry out a voltage check to establish whether the correct voltage is available at the horn terminals.

If it was observed that a gradual deterioration in volume was apparent before the failure then the instructions outlined under the heading "Sound—loss of volume" are to be carried out.

Should the horns have been operating satisfactorily prior to a sudden failure, the horn circuit is to be checked in order to establish the current capacity, should this be in excess of 3·5 amperes, the adjusting screw is to be rotated slowly in an anti-clockwise direction until the horns are restored to their correct volume of sound.

If the current capacity is less than that specified the adjusting screw is to be rotated slowly in the reverse direction until the correct volume is obtained.

WINDSCREEN WIPERS

THE 6WA WINDSCREEN WIPER (Fig. 47)

This is a two-speed wiper controlled by a three-position switch. The wiper motor employs two-stage spur gearing to provide increased driving torque, and incorporates a limit switch which automatically regulates the wiping cycle. A cable rack transmission connected to the wiper gearbox, transmits the power to the wiper arms and blades by reciprocating motion.

Limit switch operation

The limit switch is located in the wiper gearbox cover. It ensures that the wiper arms and blades come to rest at the end of each wiping cycle, irrespective of their positions at the instant of switching off. The switch comprises a sector-type fixed contact on the gearbox cover, and a moving contact carried on the gearbox crankpin.

For the greater part of each wiping cycle, the limit switch contacts are closed, thus shorting out the panel control switch and providing an alternative earth return path for the motor current. Each time the wiper blades reach the side of the windscreen at which they are normally parked, the limit switch opens. Thus, when the control switch is turned to "OFF", the motor continues to operate until the blades reach their parked position.

Control of speeds (Refer to Fig. 48)

With the switch in the "OFF" position, the motor is isolated from earth, and is therefore made inoperative. Turning the switch to the "NORMAL" speed position completes the armature and field circuit, and with the resistor being short circuited, the motor operates at the lower speed. Moving the switch into the "HIGH" speed position causes the resistor to be switched into circuit, thereby increasing the speed of the motor.

Testing and adjusting

Measuring supply voltage:

Using a first grade moving coil voltmeter, measure the voltage between the motor supply terminal (to which the green cable is connected) and a good earthing point. This should be 11·5 volts with the wiper working normally. If the reading is low, check the battery, switch (by substitution), cabling and connections.

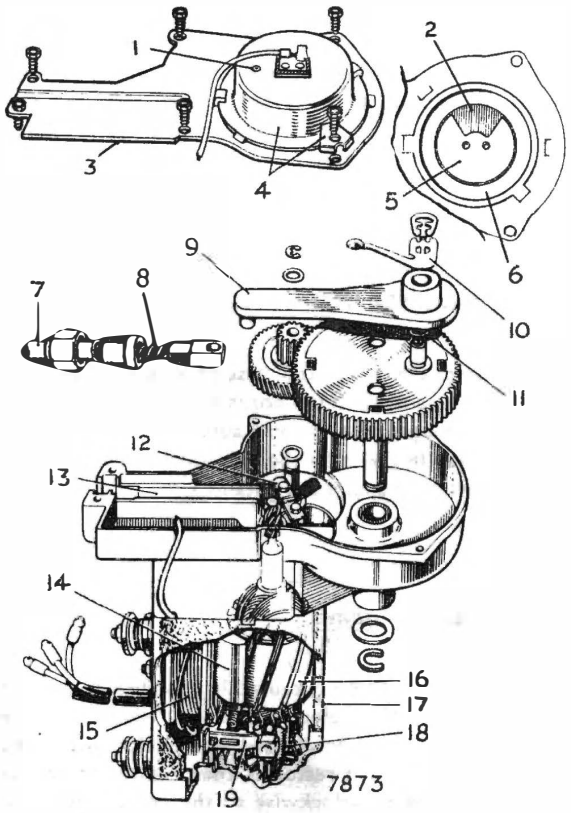

1. SETTING PIP
2. INSULATED SECTOR
3. GEARBOX COVER
4. DOMED COVER AND FIXINGS
5. LIMIT SWITCH FIXED CONTACT
6. INSIDE OF COVER
7. PROTECTIVE TUBING
8. CABLE RACK
9. CONNECTING ROD
10. LIMIT SWITCH MOVING CONTACT
11. PEN—STEEL WASHER
12. ARMATURE STOP-PLATE
13. CROSS-HEAD GUIDE CHANNEL
14. POLE SHOE
15. FIELD COIL
16. ARMATURE
17. MOTOR BODY (YOKE)
18. COMMUTATOR
19. BRUSH GEAR

Fig. 47. *6WA wiper motor and gearbox*

Measuring light running current:

If the normal running terminal voltage is correct, disconnect the cable rack at the wiper gearbox and measure the light running current with a first grade moving coil ammeter connected in the supply cable. As this involves removing the gearbox cover, the opportunity can be taken to observe the speed of operation by counting the revolutions per minute of the final gear.

The light running current must not exceed 3·4 amperes at normal speed (44—48 c.p.m.). If it does, fit a new windscreen wiper motor.

Check cable rack and tubing:

The maximum permissible force to move the cable rack in its protective tubing is 6 lb. (2·7 kg.) with the wiper arms, blades and motor disconnected. The measurement can be made by hooking a spring balance in the hole in the crosshead (into which a pin on the connecting rod is normally located) and withdrawing the rack with the balance.

Binding of the rack can be due to kinked or flattened tubing or to faulty installation. Minor faults can be cleared with a suitable test mandrel sold specifically for checking wiper installations. Badly kinked or flattened tubing must be renewed. Any bends of less than 9 in. (23 cm.) radius must be re-formed.

At the wheelboxes the flared ends of the intermediate tubing should be located in the inner wide slots of the wheelbox clamp plates but the end of the main tubing should be located in the outer narrow slot.

The cable rack should be well lubricated with Shell Retinax "A".

Checking wheelboxes:

Check the wheelboxes for misalignment or looseness and rectify as required.

Renew seized wheelboxes.

Setting wiper arms and limit switch:

To adjust the sweep of the wiper arms, remove and refit the arms in the manner described under the appropriate heading. The wiper gearbox limit switch cover is not to be used for this purpose.

If it is necessary for any reason to remove the limit switch cover, make sure it is refitted in its original position, otherwise the effective wiping arc of the wiper blades will be incorrect. The original position for right-hand drive models is when the setting pip is at the furthest point away from the cable transmission, while for left-hand drive models the pip position is the nearest point to the cable transmission.

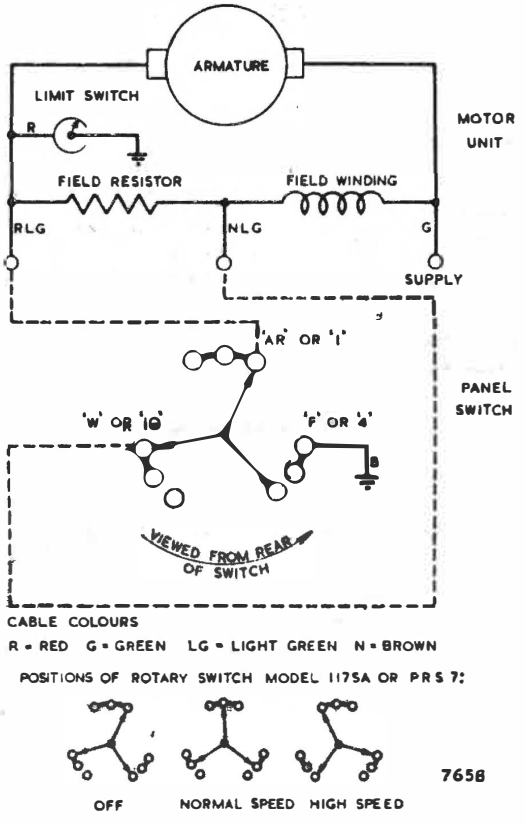

Fig. 48. *Internal connections of 6WA two-speed wiper and switch*

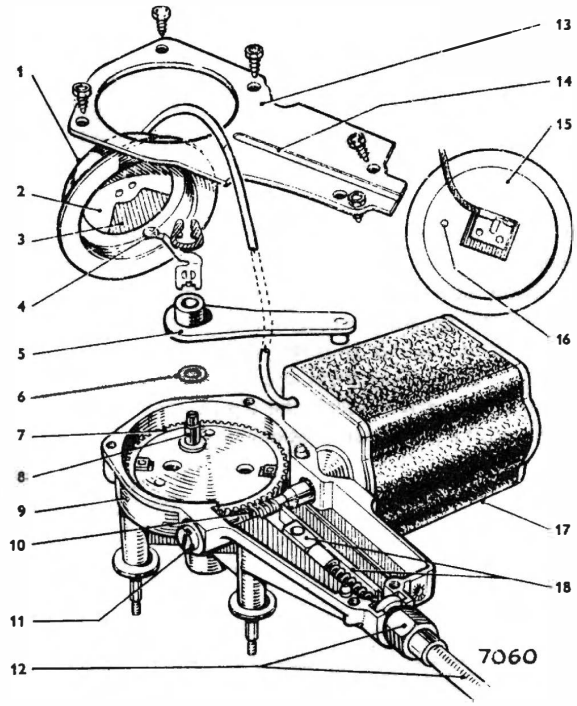

1. DOMED COVER
2. LIMIT SWITCH FIXED CONTACT
3. INSULATED SECTOR
4. LIMIT SWITCH MOVING CONTACT
5. CONNECTING ROD
6. PEN-STEEL WASHER
7. FINAL GEAR
8. CRANK PIN
9. GEARBOX
10. WORM GEAR
11. ARMATURE END PLAY ADJUSTING SCREW
12. PROTECTIVE TUBING AND NUT
13. GEARBOX COVER
14. CENTRAL GROOVE
15. PLAN VIEW OF DOMED COVER
16. SETTING PIP
17. MOTOR
18. CROSS-HEAD AND CHANNEL

Fig. 49. *DR3A wiper motor and gearbox*

THE DR3A WINDSCREEN WIPER (Fig. 49)

This wiper is a single speed model operating through a single-stage worm and nylon gear. The cable rack which transmits the drive to the wiper arms is identical to that employed in the 6WA wiper arrangement. A limit switch is incorporated in the wiper gearbox to control the wiping cycle. This operates on the same principle to that on the 6WA model.

Servicing

The servicing procedure and method of testing is the same as given in earlier paragraphs for the 6WA windscreen wiper.

WIPER ARMS AND BLADES

Efficient wiping is dependent upon having a clean windscreen and wiper blades in good condition.

Use methylated spirits to remove oil, tar spots and other stains from the windscreen. Silicone and wax-based polishes must not be allowed to contaminate the screen or wiper blades.

Worn or perished wiper blades are easily removed for renewal.

Wiper arms—To remove and refit (See Fig. 50)

Lift the spring retaining clip and slide the arm from the spindle. Serrations provide 5° adjustment steps for the arm. Refit arm and check sweep of operation.

COMBINED WINDSCREEN WIPER SWITCH AND WASHER CONTROL

Integral with the switch on certain models is a windscreen washer pump unit, the control knob for the windscreen wipers also actuating, when depressed, the bellows of the pump unit.

The switch unit and bellows unit are separable from each other, so that where one unit becomes defective in service it can be dismounted from its mating unit and a new unit installed.

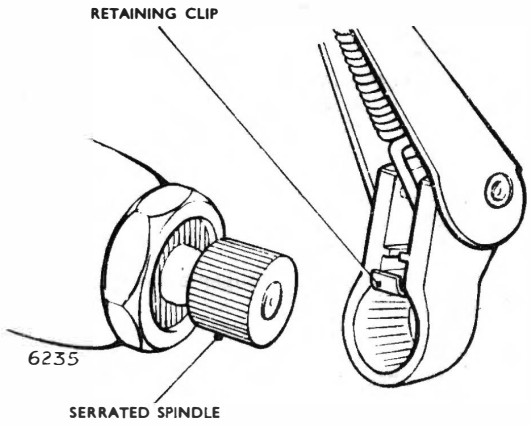

Fig. 50. *Wiper blade and adjustment*

All that is necessary to detach the bellows unit from the switch, is to unscrew the unit leaving the switch in position. Before detaching Lucar connectors from the rear of the switch, always disconnect the negative (earth) terminal from the battery.

The complete assembly is retained to the facia panel by a chromium plated ring-nut which is situated at the front of the facia immediately in front of the control knob; to detach the control knob, first depress the spring-loaded catch which extends from the control shaft into the shank of the knob.

Do not attempt further disassembly as no provision is made for the repair of defective units.

INSTRUMENTS

FUEL AND TEMPERATURE INDICATORS (Fig. 51)

The bimetal resistance equipment for fuel contents and temperature indication consists, in each case, of an indicator head and transmitter unit connected to a common voltage stabilizer.

In both applications the indicator head operates on a thermal principle, using a bimetal strip surrounded by a heater winding and the transmitter unit is of a resistance type.

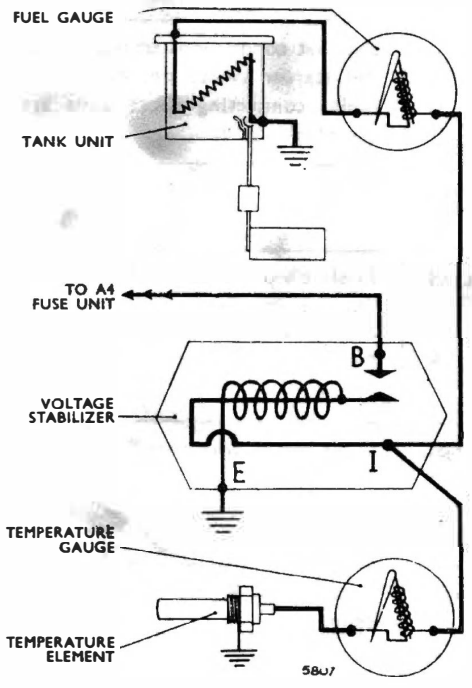

Fig. 51. *Fuel and temperature indicators and voltage stabilizer*

Instrument voltage stabilizer (Figs. 51 and 52)

The system by which the equipment functions is voltage sensitive and the voltage stabilizer which serves both indicators is necessary to ensure a constant supply of a predetermined voltage to the equipment. The stabilizer is situated behind the instrument panel.

The mean voltage between terminal "I" and earth is 10 volts. Renew the stabilizer if faulty.

SERVICING PRECAUTIONS

Ensure that the cables from the instruments are connected to their proper terminals on the stabilizer.

Ensure that the stabilizer is mounted with its securing lug set vertically and the fixing hole downwards.

Ensure that the stabilizer is effectively earthed through its mounting lug.

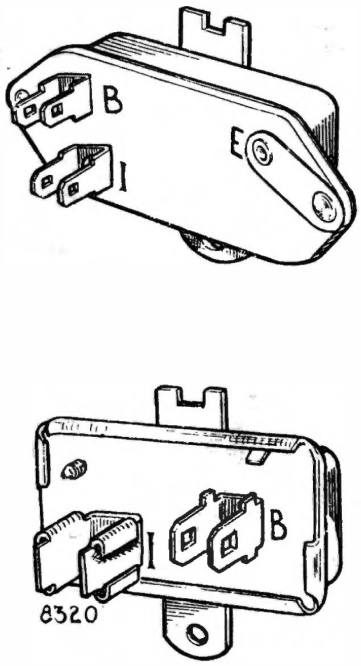

Fig. 52

Two types of voltage stabilizer to be found in service. Failure to observe the precautions will result in inaccurate instrument readings

LOCATION AND REMEDY OF FAULTS

STARTER MOTOR TROUBLE

Symptoms	Possible Causes	Remedy
Starter motor lacks power or fails to turn engine	**Stiff engine, indicated by inability to turn by hand**	Locate and remedy cause of stiffness
	If engine can be turned by hand then trouble may be due to:—	
	Battery discharged	Start by hand. Charge battery either by a long period of day-time running or from independent electrical supply
	Broken or loose connection in starter circuit	See that connections to battery, starter and starter switch are tight, and that cables connecting these units are not damaged
	Starter commutator or brushes dirty	Clean
	Brushes worn, or not fitted correctly	Replace worn brushes. See that brushes "bed" correctly
	Starter pinion jammed in mesh with flywheel	Rotate squared end of starter shaft with spanner
Starter operates, but does not crank engine	**Pinion of starter drive does not engage with flywheel, due to dirt on screwed sleeve**	Clean sleeve with paraffin
Starter pinion will not disengage from flywheel when engine is running	Starter pinion jammed in mesh with flywheel	Rotate squared end of starter shaft with spanner

CHARGING TROUBLE

ON SYSTEMS EMPLOYING DIRECT CURRENT GENERATOR

Symptoms	Possible Causes	Remedy
Battery in low state of charge, shown by lack of power when starting. (Hydrometer reading less than 1·200)	**Generator not charging when running at about 20 m.p.h. with no lights in use.** Due to:—	
	Broken or loose connection in generator circuit, or regulator not functioning correctly	Examine charging and field circuit wiring. Tighten loose connection or replace broken lead. Particularly examine battery connections. Examine regulator
	Commutator greasy or dirty	Clean with soft rag moistened in petrol
	Giving low or intermittent output, when car is running steadily in top gear. Due to:—	
	Generator belt slipping	Adjust belt (see Section B)
	Loose or broken connections in generator circuit	Examine charging and field circuits wiring. Tighten loose connections or replace broken lead. Particularly examine battery connections
	Brushes greasy or dirty	Clean with soft rag moistened in petrol
	Brushes worn or not fitted correctly	Replace worn brushes. See that brushes "bed" correctly
	Regulator not functioning correctly	Examine regulator
Battery overcharged, shown by burnt-out bulbs and very frequent need for "topping up". Hydrometer readings high	**Giving high output.** Due to:—	
	Regulator not functioning correctly	Examine regulator

DIAGNOSIS AND TESTING PROCEDURE

ON SYSTEMS EMPLOYING ALTERNATORS

THIS CHART should be used in conjunction with the circuit diagram shown in Fig. 20a, and the procedure must be carried out in the sequence indicated, except for the last item which can be carried out separately. Throughout the procedure, the precautions outlined earlier in this Section must be strictly observed to avoid damaging the units in the system.

Unit	Recommended Procedure
DRIVING BELT	Check for wear and tension. Renew or adjust as necessary.
CIRCUIT	Test continuity of circuit and tighten all connections. Check for reversed cables and defective insulation.
BATTERY	Check condition of battery. Clean and tighten terminal connections. Check for current at the alternator positive field terminal when the ignition is switched "OFF". Any current at this point when the ignition is "OFF" indicates that the 6RA relay contacts are not opening, thus allowing the battery to discharge through the alternator field. Remedy by fitting a new relay.
FIELD ISOLATING RELAY 6RA	Check that current is reaching the alternator positive field terminal when the ignition is switched "ON". If there is no current, temporarily link the relay terminals "C1" and "C2" by means of a jumper lead. If the alternator now shows an output at charging speed, the relay is faulty and must be renewed.
ALTERNATOR	Test the current output of the alternator in the manner described earlier in this Section. At alternator speed of approximately 4,000 r.p.m. (2,100 engine r.p.m.) the output should be 25 amperes or more. A low or zero current reading will indicate a faulty alternator or poor circuit connections. Renew or rectify as necessary.
CONTROL UNIT 4TR	If the foregoing items are in good order, the fault will lie in the control unit. Test and adjust the unit in the manner described earlier in this Section. If the unit will not respond to adjustment, a replacement must be fitted. If a replacement is fitted, check the alternator current output as previously.
WARNING LAMP AND WARNING LAMP CONTROL 3AW	Check the voltage between alternator terminal "AL" and earth with the alternator running at 3,000 r.p.m. (1,600 engine r.p.m.) and side lamps switched "ON"; if the voltage exceeds 7·5 a faulty alternator diode or a faulty alternator-to-battery circuit is indicated. Fit new alternator or rectify as necessary. If the voltage at terminal "AL" is correct (between 7 and 7·5) check the warning lamp circuit, then the warning lamp bulb and warning lamp control 3AW by substitution. Fit new parts as necessary.

ALPINE

WIRING DIAGRAM

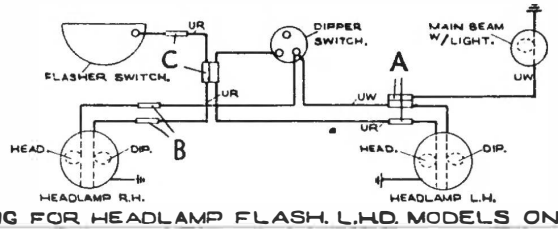

WIRING FOR HEADLAMP FLASH. L.H.D. MODELS ONLY.

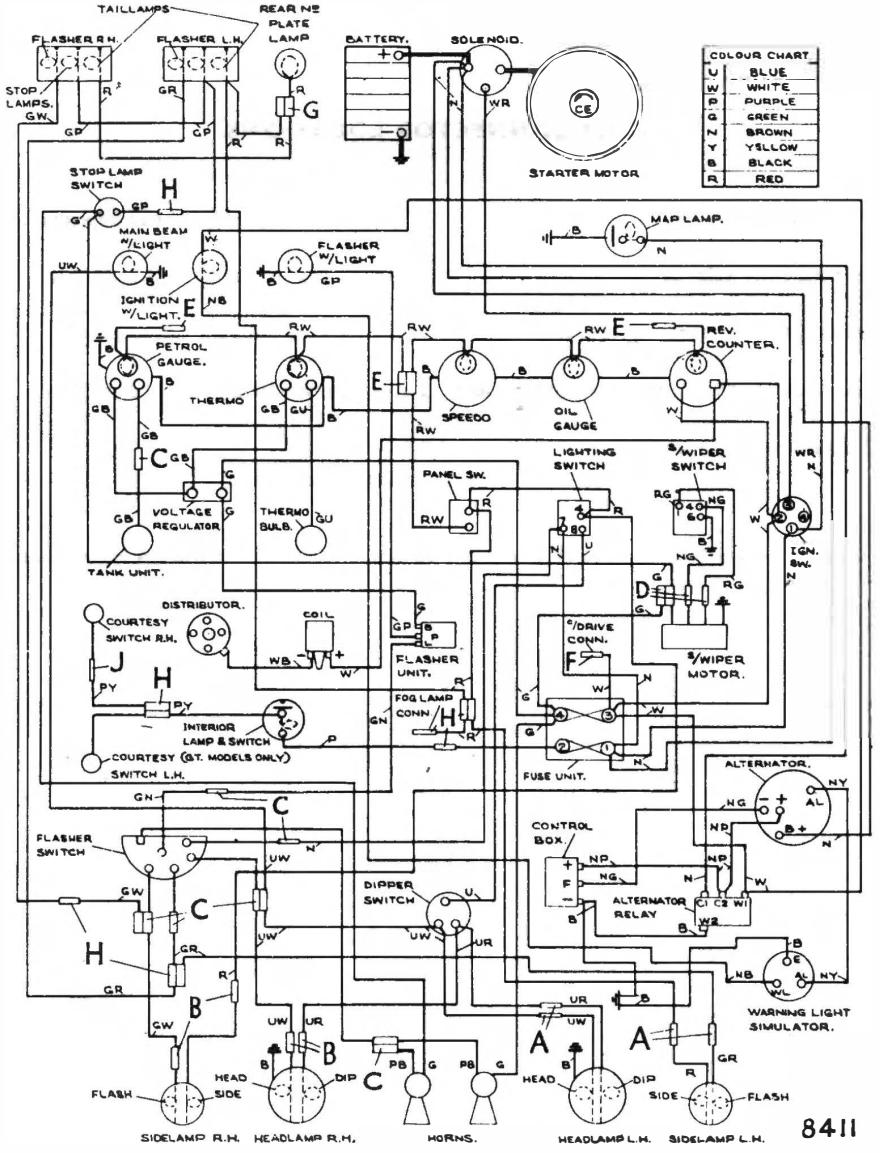

A LIST OF SNAP CONNECTOR LOCATIONS IS SHOWN OVERLEAF FOR USE WITH THIS WIRING DIAGRAM

ALPINE

SNAP CONNECTOR LOCATIONS

A — Left-hand front wing valance

B — Right-hand front wing valance

C — Beneath facia adjacent to steering column

D — Beneath facia adjacent to windscreen wiper motor

E — At rear of facia adjacent to instruments

F — Right-hand of bulkhead adjacent to wing valance

G — At rear of car behind boot lock

H — Beneath facia on left-hand side

J — Beneath facia on right-hand side

THIS LIST IS TO BE USED IN CONJUNCTION WITH WIRING DIAGRAM SHOWN ON PREVIOUS PAGE

GAZELLE (Column or Floor Gear-change), MINX (Column Gear-change)

WIRING DIAGRAM

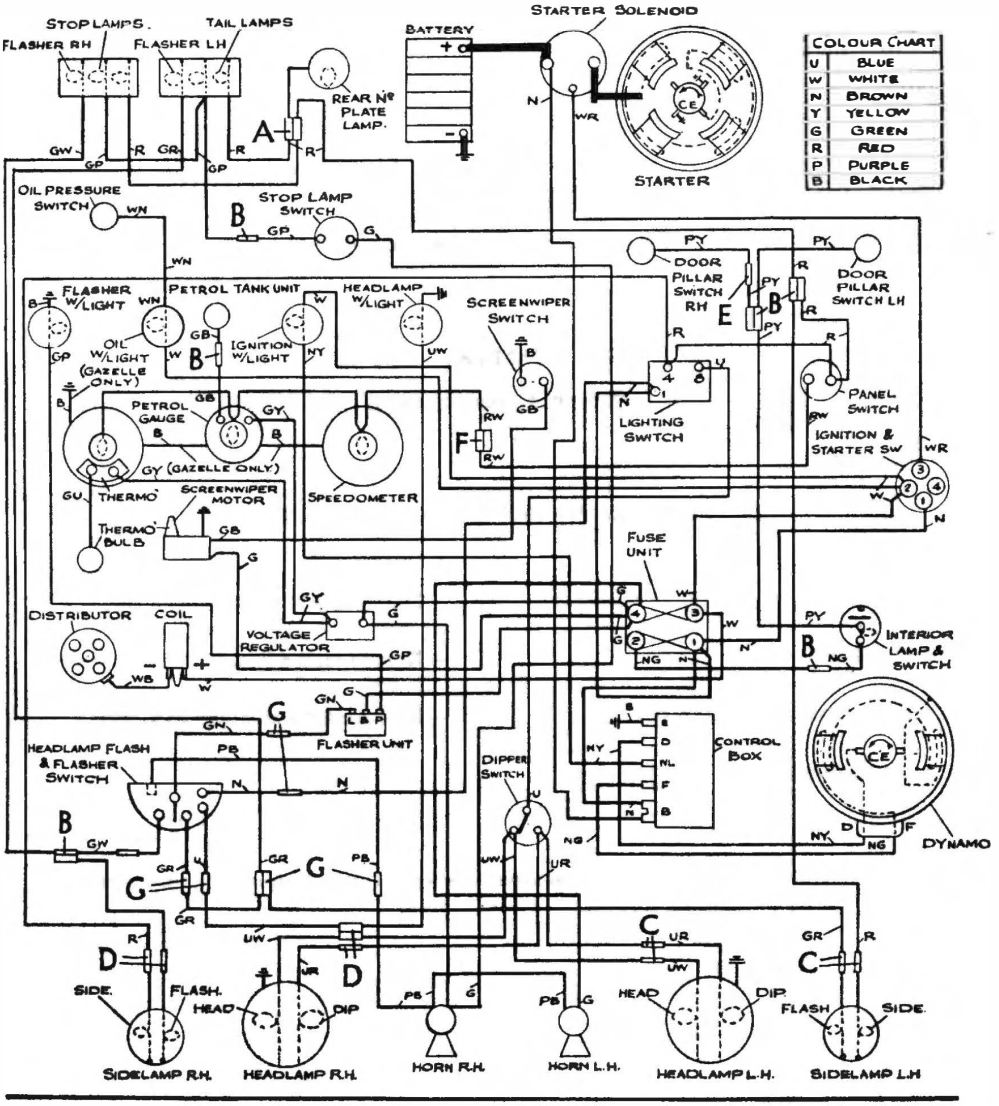

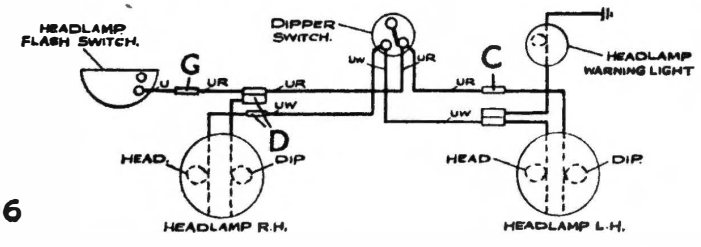

8406

WIRING OF HEADLAMPS, W/LIGHT & FLASH SW. FOR L.H.D.

A LIST OF SNAP CONNECTOR LOCATIONS IS SHOWN OVERLEAF FOR USE WITH THIS WIRING DIAGRAM

GAZELLE

(Column or Floor Gear-change)

MINX

(Column Gear-change)

SNAP CONNECTOR LOCATIONS

A — Upper left-hand corner of luggage compartment

B — Beneath facia at left-hand side

C — On front wing valance at left-hand side

D — On front wing valance at right-hand side

E — Beneath facia at right-hand side

F — Rear of facia adjacent to speedometer

G — Beneath facia adjacent to steering column in cowl

THIS LIST IS TO BE USED IN CONJUNCTION WITH WIRING DIAGRAM SHOWN ON PREVIOUS PAGE

MINX (Floor Gear-change)

WIRING DIAGRAM

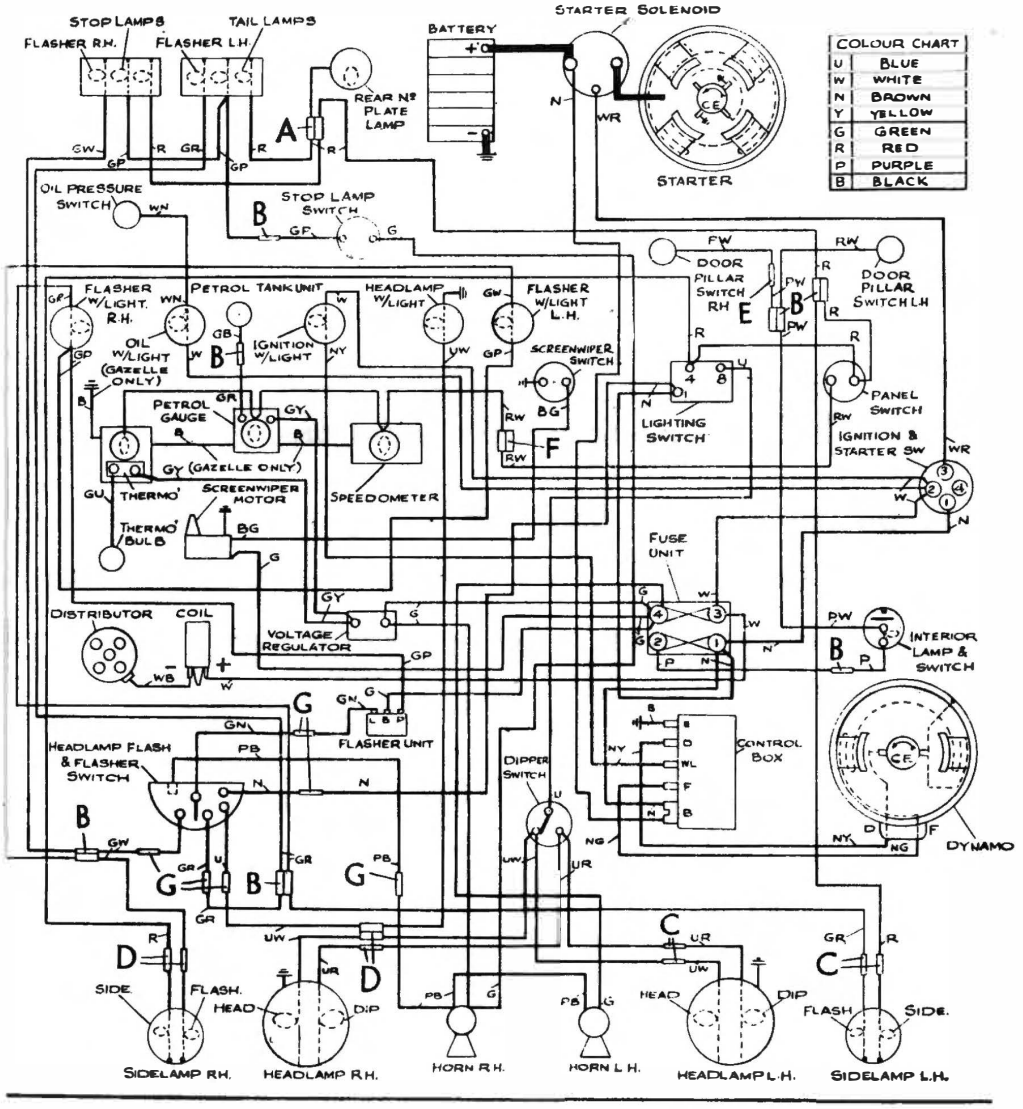

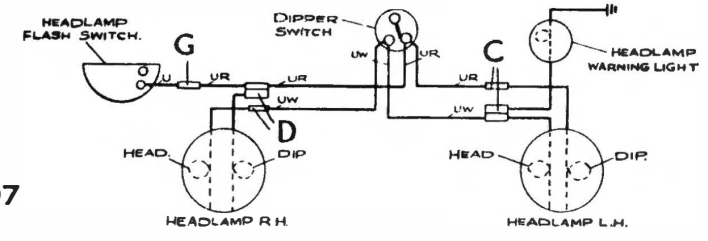

8407

WIRING OF HEADLAMPS W/LIGHT & FLASH.SW FOR L.H.D.

A LIST OF SNAP CONNECTOR LOCATIONS IS SHOWN OVERLEAF FOR USE WITH THIS WIRING DIAGRAM

MINX

(Floor Gear-change)

SNAP CONNECTOR LOCATIONS

A — Upper left-hand corner of luggage compartment

B — Beneath facia at left-hand side

C — On front wing valance at left-hand side

D — On front wing valance at right-hand side

E — Beneath facia at right-hand side

F — Rear of facia adjacent to speedometer

G — Beneath facia adjacent to steering column in cowl

THIS LIST IS TO BE USED IN CONJUNCTION WITH WIRING DIAGRAM SHOWN ON PREVIOUS PAGE

RAPIER

WIRING DIAGRAM

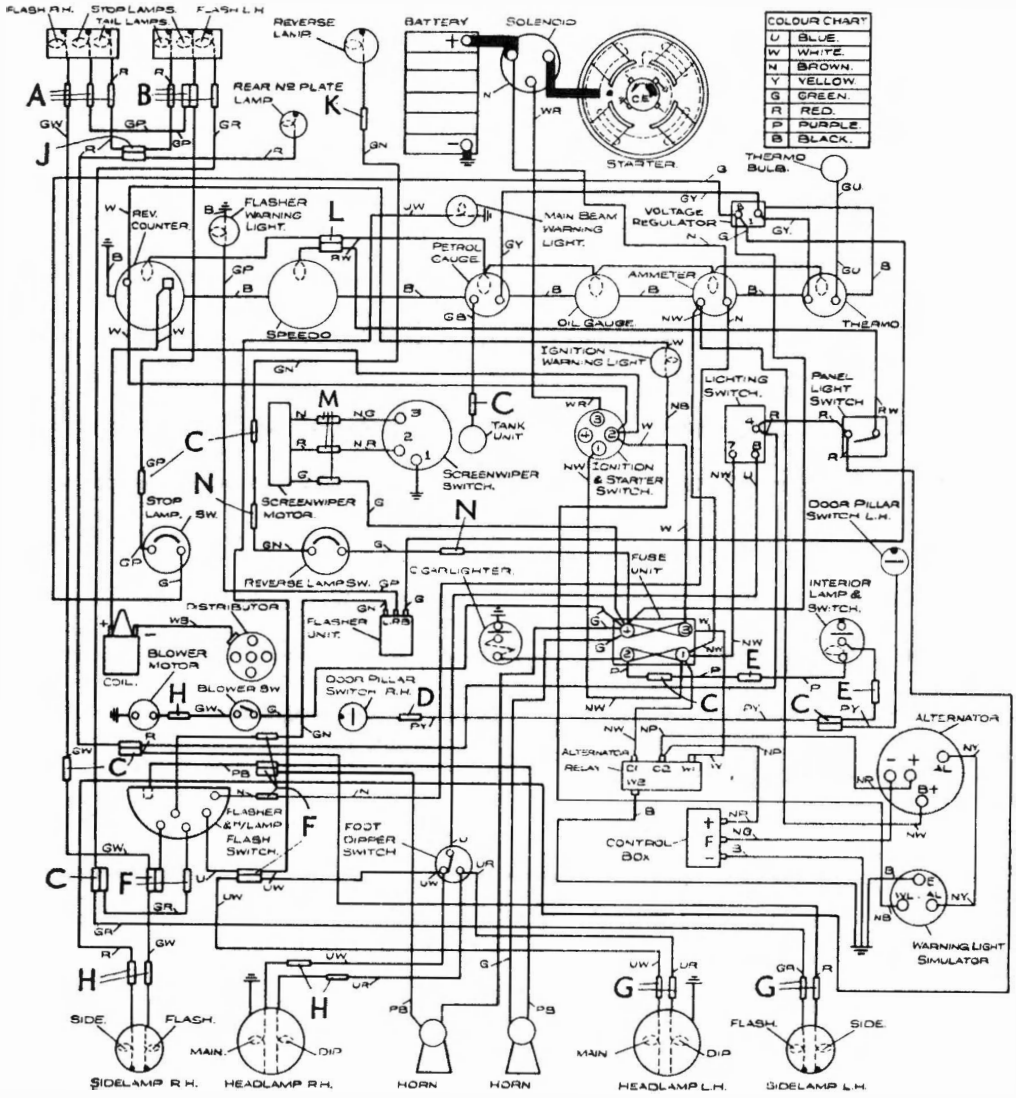

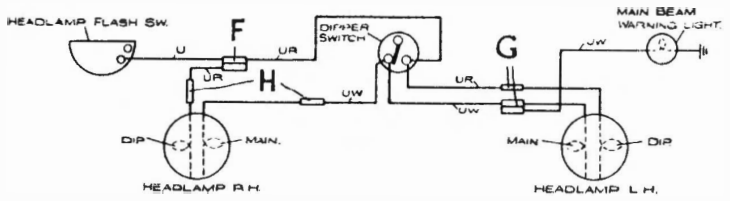

8409

WIRING OF HEADLAMPS, W/LIGHT & FLASH SWITCH FOR L.H.D.

A LIST OF SNAP CONNECTOR LOCATIONS IS SHOWN OVERLEAF FOR USE WITH THIS WIRING DIAGRAM

RAPIER

SNAP CONNECTOR LOCATIONS

A — At rear of right-hand tail lamp cluster

B — At rear of left-hand tail lamp cluster

C — Beneath left-hand side of facia

D — Beneath right-hand side of facia

E — At rear of left-hand quarter trim

F — Beneath facia adjacent to steering column

G — On front wing valance at left-hand side

H — On front wing valance at right-hand side

J — Upper left-hand corner of luggage compartment

K — Adjacent to reversing lamp

L — Beneath facia in line with instruments

M — Adjacent to windscreen wiper motor

N — On front wing valance at left-hand side beneath control box

THIS LIST IS TO BE USED IN CONJUNCTION WITH WIRING DIAGRAM SHOWN ON PREVIOUS PAGE

SUPER MINX

WIRING DIAGRAM

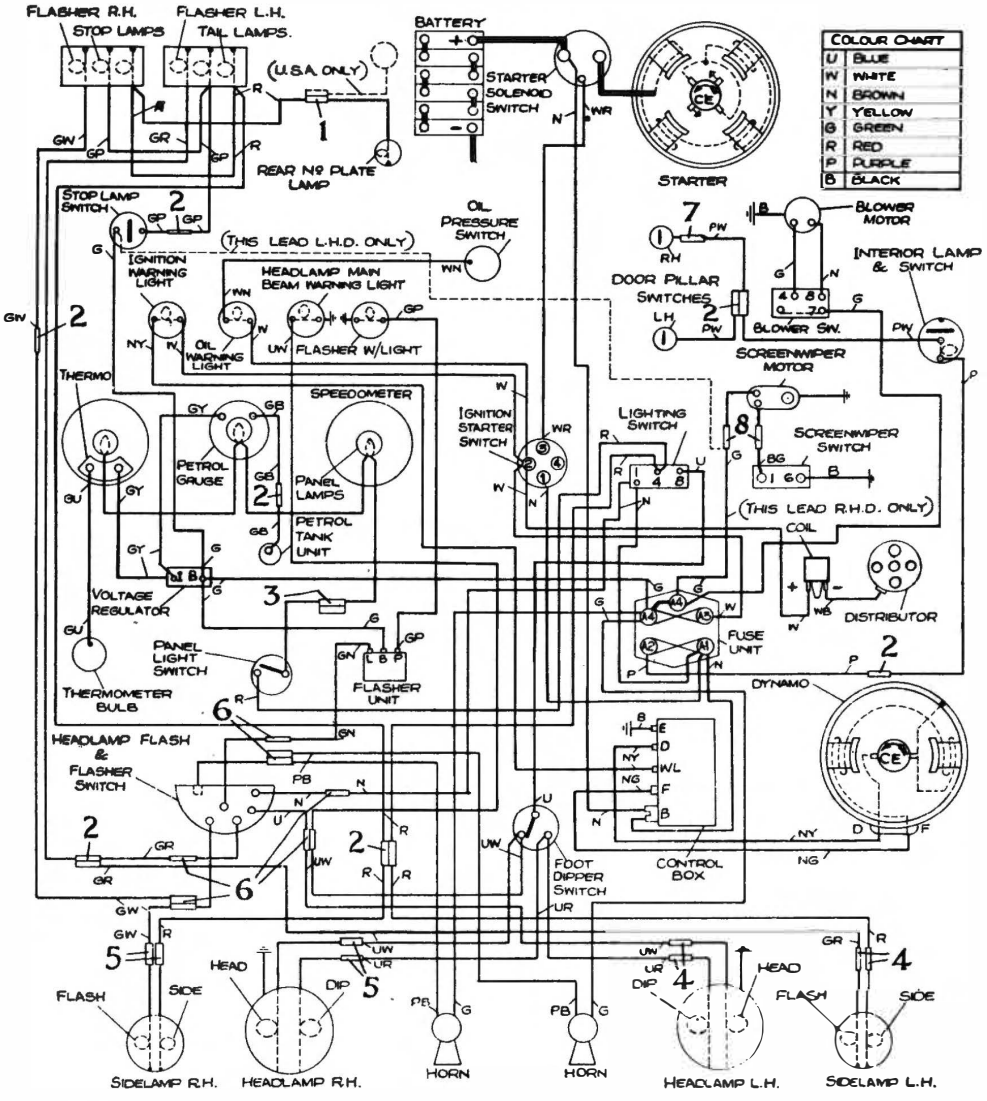

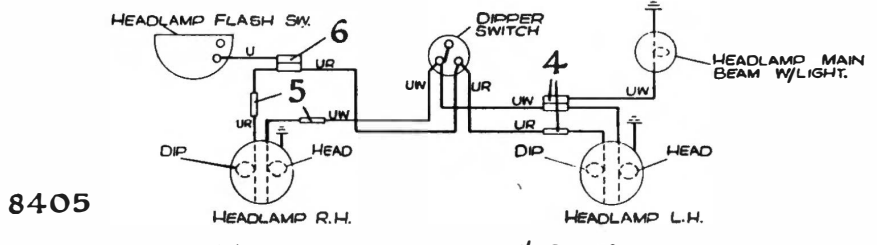

8405

WIRING OF HEADLAMPS, W/LIGHT & FLASH SW. FOR L.H.D.

A LIST OF SNAP CONNECTOR LOCATIONS IS SHOWN OVERLEAF FOR USE WITH THIS WIRING DIAGRAM

SUPER MINX

SNAP CONNECTOR LOCATIONS

1. Behind rear bumper
2. Under facia at left-hand side
3. Adjacent to panel lamp switch
4. On left-hand front wing valance
5. On right-hand front wing valance
6. Under facia near steering column
7. Under facia on right-hand side
8. Adjacent to wiper motor

THIS LIST IS TO BE USED IN CONJUNCTION WITH WIRING DIAGRAM SHOWN ON PREVIOUS PAGE

SUPER MINX SPORTS MODEL
WIRING DIAGRAM

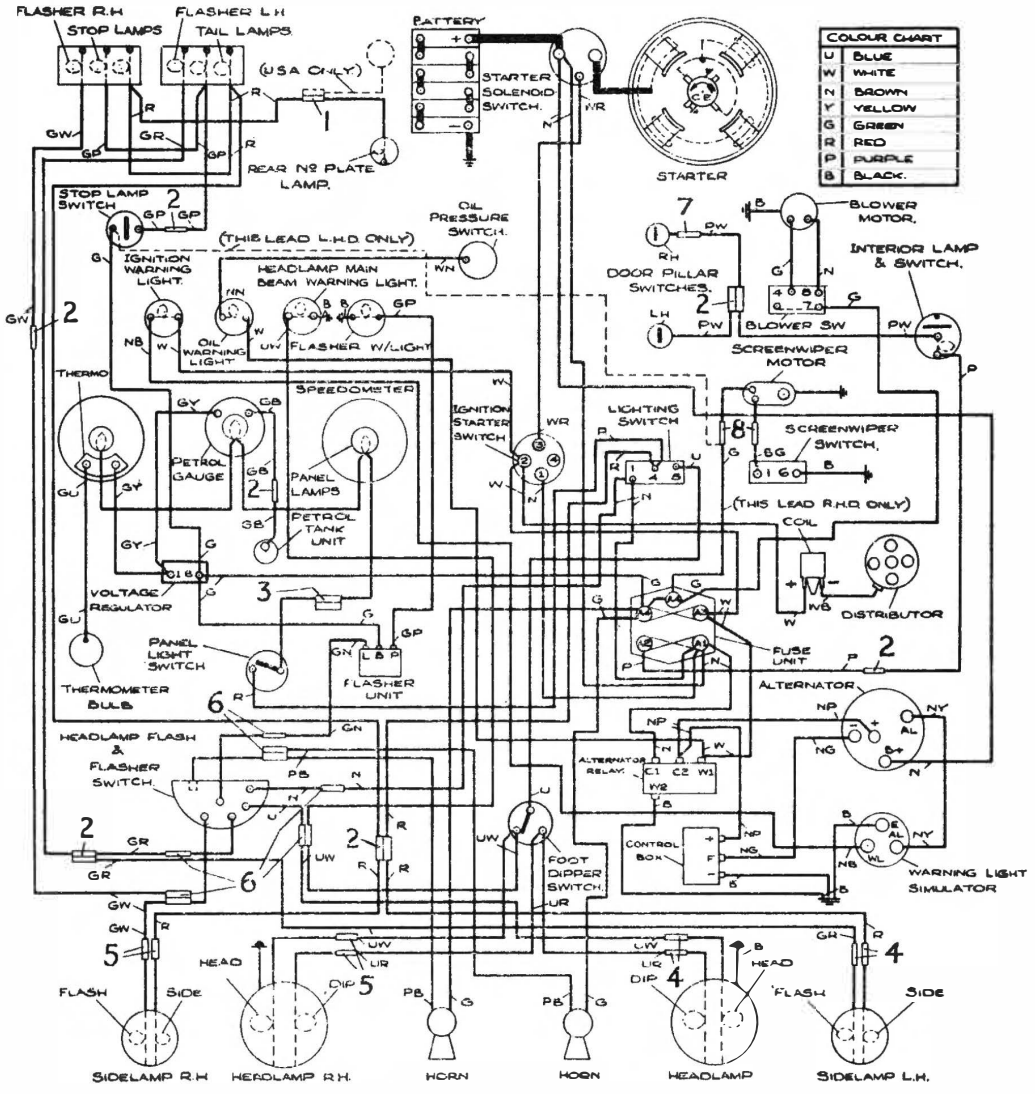

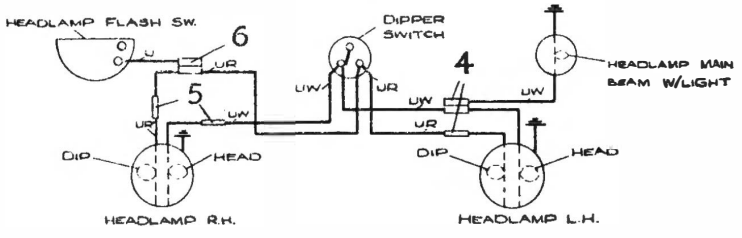

8372

WIRING OF HEADLAMPS W/LIGHT & FLASH SW. FOR L.H.D.

A LIST OF SNAP CONNECTOR LOCATIONS IS SHOWN OVERLEAF FOR USE WITH THIS WIRING DIAGRAM

SUPER MINX

Sports Model

SNAP CONNECTOR LOCATIONS

1. Behind rear bumper
2. Under facia at left-hand side
3. Adjacent to panel lamp switch
4. On left-hand front wing valance
5. On right-hand front wing valance
6. Under facia near steering column
7. Under facia on right-hand side
8. Adjacent to wiper motor

THIS LIST IS TO BE USED IN CONJUNCTION WITH WIRING DIAGRAM SHOWN ON PREVIOUS PAGE

SCEPTRE

WIRING DIAGRAM

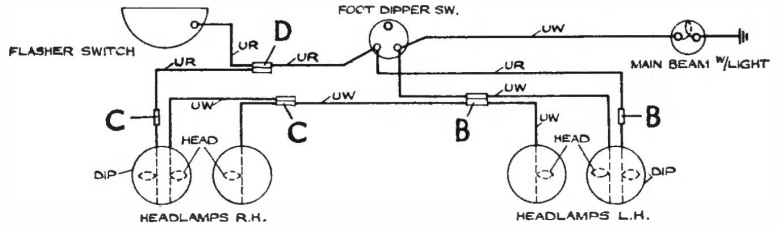

WIRING FOR HEADLAMP FLASH L.H.D. MODELS ONLY.

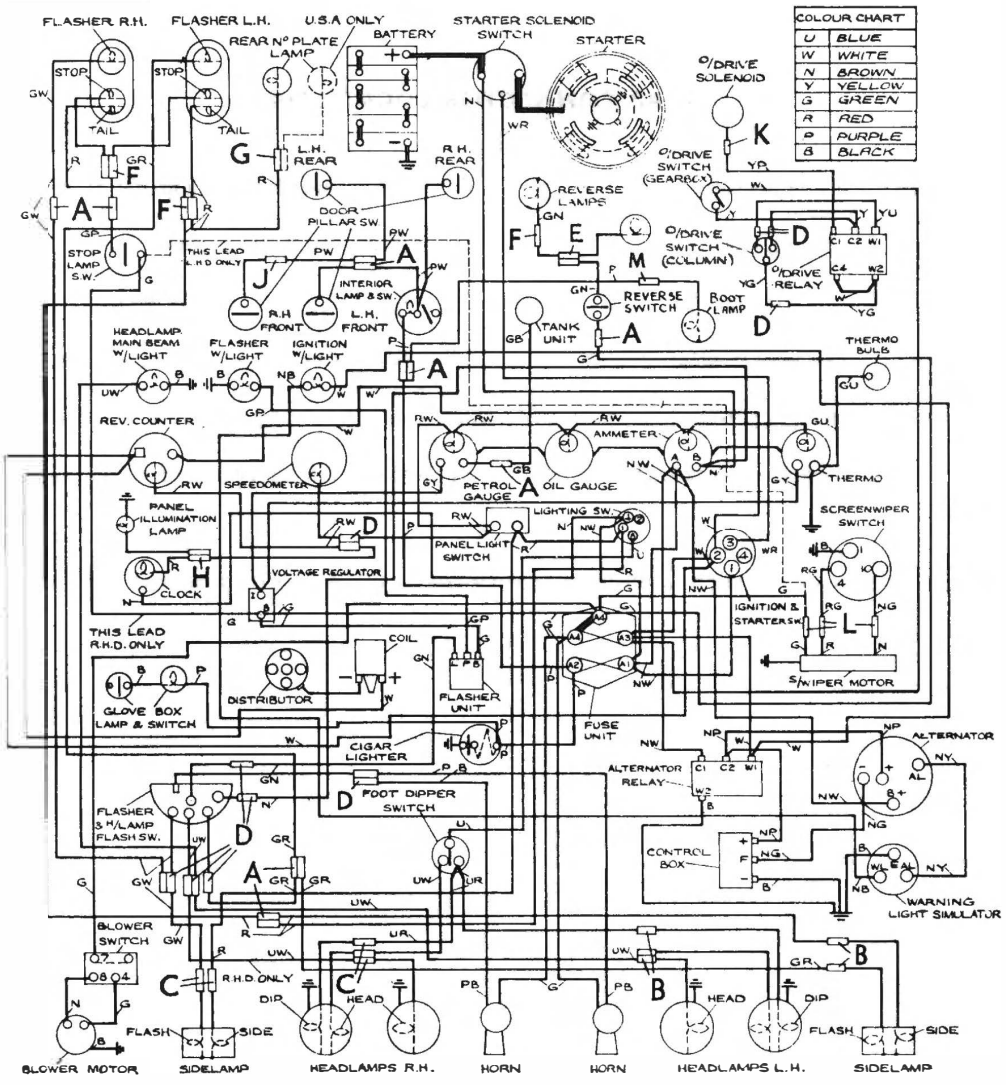

WIRING OF HEADLAMPS FOR R.H.D. MODELS AS SHOWN. 8410

A LIST OF SNAP CONNECTOR LOCATIONS IS SHOWN OVERLEAF FOR USE WITH THIS WIRING DIAGRAM

SCEPTRE

SNAP CONNECTOR LOCATIONS

A — Beneath left-hand side of facia

B — On left-hand front wing valance

C — On right-hand front wing valance

D — Beneath facia in line with steering column

E — Right-hand rear of luggage compartment

F — Left-hand rear of luggage compartment

G — Behind rear bumper adjacent to number plate

H — Rear of panel lamp switch

J — Beneath right-hand side of facia

K — Right-hand side of gearbox at rear

L — In engine compartment at wiper motor

M — Central in luggage compartment lid

THIS LIST IS TO BE USED IN CONJUNCTION WITH WIRING DIAGRAM SHOWN ON PREVIOUS PAGE

VOGUE

WIRING DIAGRAM

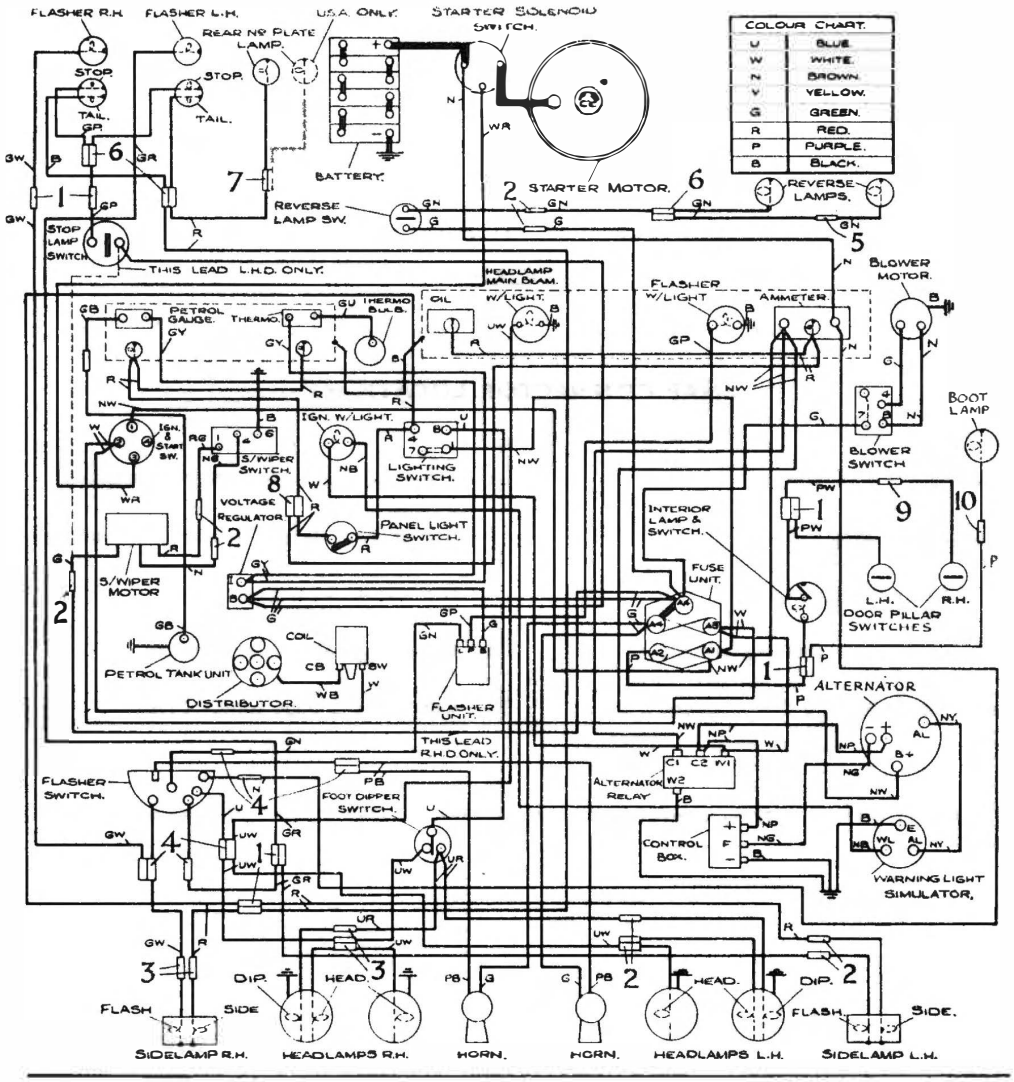

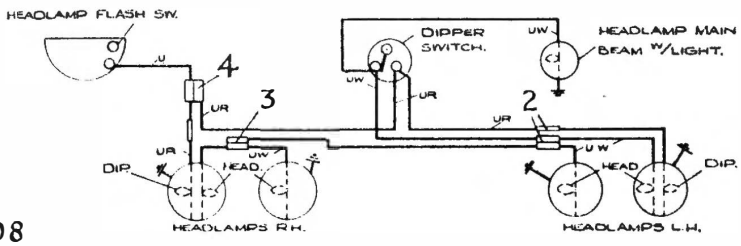

8408

WIRING OF HEADLAMPS W/LIGHT & FLASH SW. FOR L.H.D.

A LIST OF SNAP CONNECTOR LOCATIONS IS SHOWN OVERLEAF FOR USE WITH THIS WIRING DIAGRAM

BODY

SECTION O

CONTENTS

	Page		Page
AIR INTAKE	21	HEAD LINING	22
BACKLIGHT	7	INTERIOR DOOR HANDLES	8
BODY MOULDINGS	24	LOCK REMOTE CONTROL	15
BONNET	16	NAME BADGES	24
BOOT LID	20	NO DRAUGHT VENTILATOR	10
BOOT LID LOCK	20	PRINCIPAL UNDERFRAME DIMENSIONS	2
DOOR ARMREST	10	QUARTER LIGHT GLASS	13
DOOR PULL	10	REAR DOOR VENTILATOR	13
DOOR TRIM PAD	10	REAR SEAT	26
DOOR LOCK (*front*) ... ... (*Super Minx, Sceptre, Vogue*)	14	REAR PARCEL TRAY	22
DOOR LOCK (*rear*)	14	REAR SEAT (*Estate car*)	26
DOOR LOCKS ... ... (*Minx, Gazelle, Rapier, Alpine*)	15	SAFETY BELTS	28
ESTATE CARS	25	SPARE WHEEL CARRIER	21
EXTERIOR DOOR HANDLES	16	STRIKER UNIT	16
FACIA PANEL	22	TAILGATE WINDOW	25
FACIA CONSOLE	22	TAILGATE ASSEMBLY	26
FACIA CRASH ROLL	24	WEATHERSTRIPS	26
FRONT GRILLE ASSEMBLY	17	WINDSCREEN	5
FRONT AND REAR BUMPERS	20	WINDING WINDOW (*front*)	12
FRONT SEAT	21	WINDING WINDOW (*rear*)	12
FIXED SIDE WINDOWS ... ... (*Estate cars*)	26	WINDING WINDOW (*rear, Estate*)	25
GLOVE BOX LID LOCK	16	WINDOW REGULATOR	14

PRINCIPAL UNDERFRAME DIMENSIONS

MINX RAPIER GAZELLE

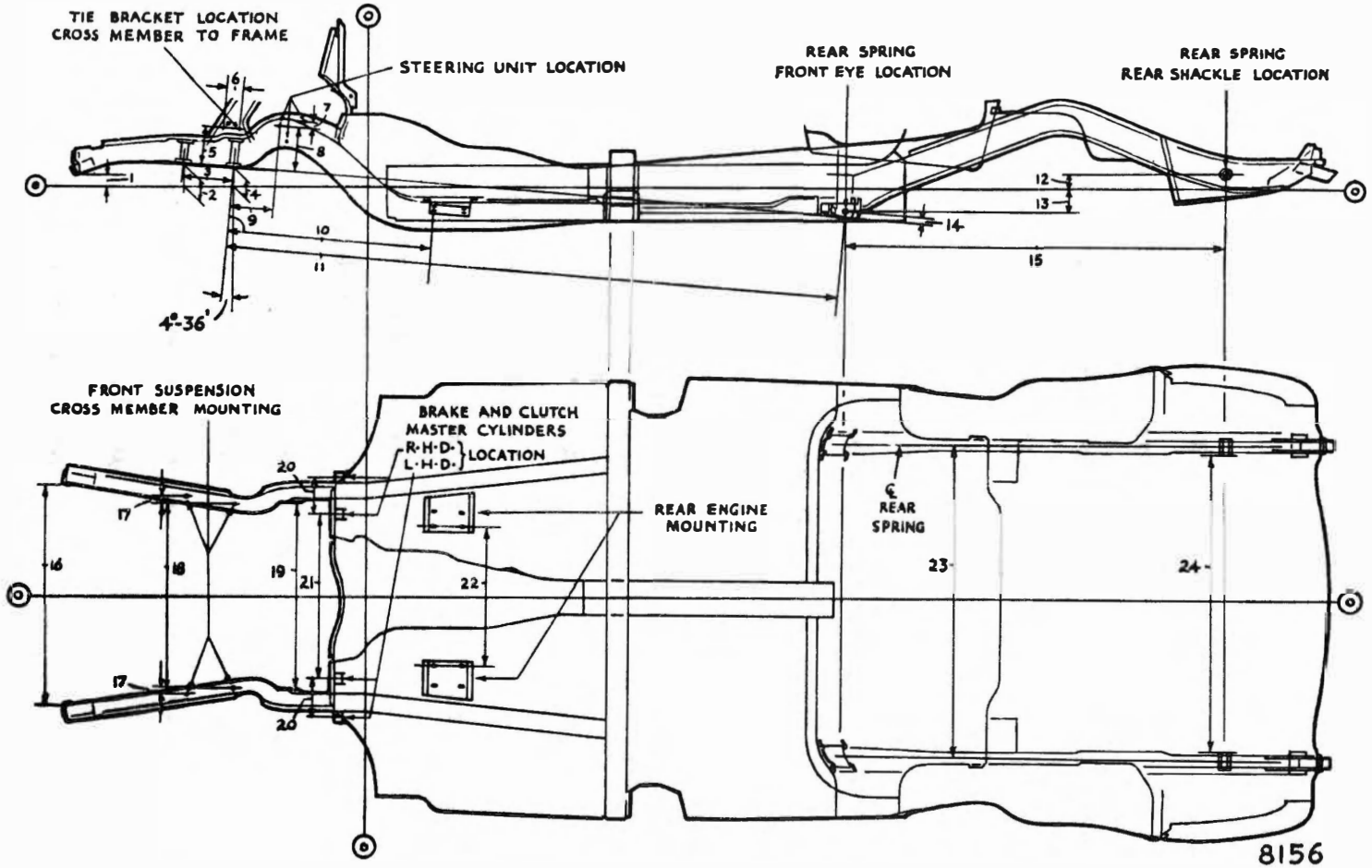

1.—1·66" (4·216 c.m.)	7.—0·53" (1·350 c.m.)	13.—2·96" (7·518 c.m.)	19—22·34" (56·743 c.m.)
2.—3·12" (7·925 c.m.)	8.—5·15" (13·081 c.m.)	14.—0·34" (0·863 c.m.)	20.—5·00" (12·70 c.m.)
3.—6·00" (15·240 c.m.)	9.—5·56" (14·122 c.m.)	15.—46·44" (117·96 c.m.)	21.—19·64" (49·90 c.m.)
4.—2·64" (6·706 c.m.)	10.—24·36" (61·874 c.m.)	16.—27·12" (69·364 c.m.)	22.—16·50" (41·91 c.m.)
5.—4·50" (11·430 c.m.)	11.—74·16" (188·36 c.m.)	17.—0·88" (2·235 c.m.)	23.—37·50" (95·25 c.m.)
6.—2·18" (5·537 c.m.)	12.—1·38" (3·505 c.m.)	18.—22·56" (57·302 c.m.)	24.—35·84" (91·034 c.m.)

PRINCIPAL UNDERFRAME DIMENSIONS

SCEPTRE VOGUE SUPER-MINX

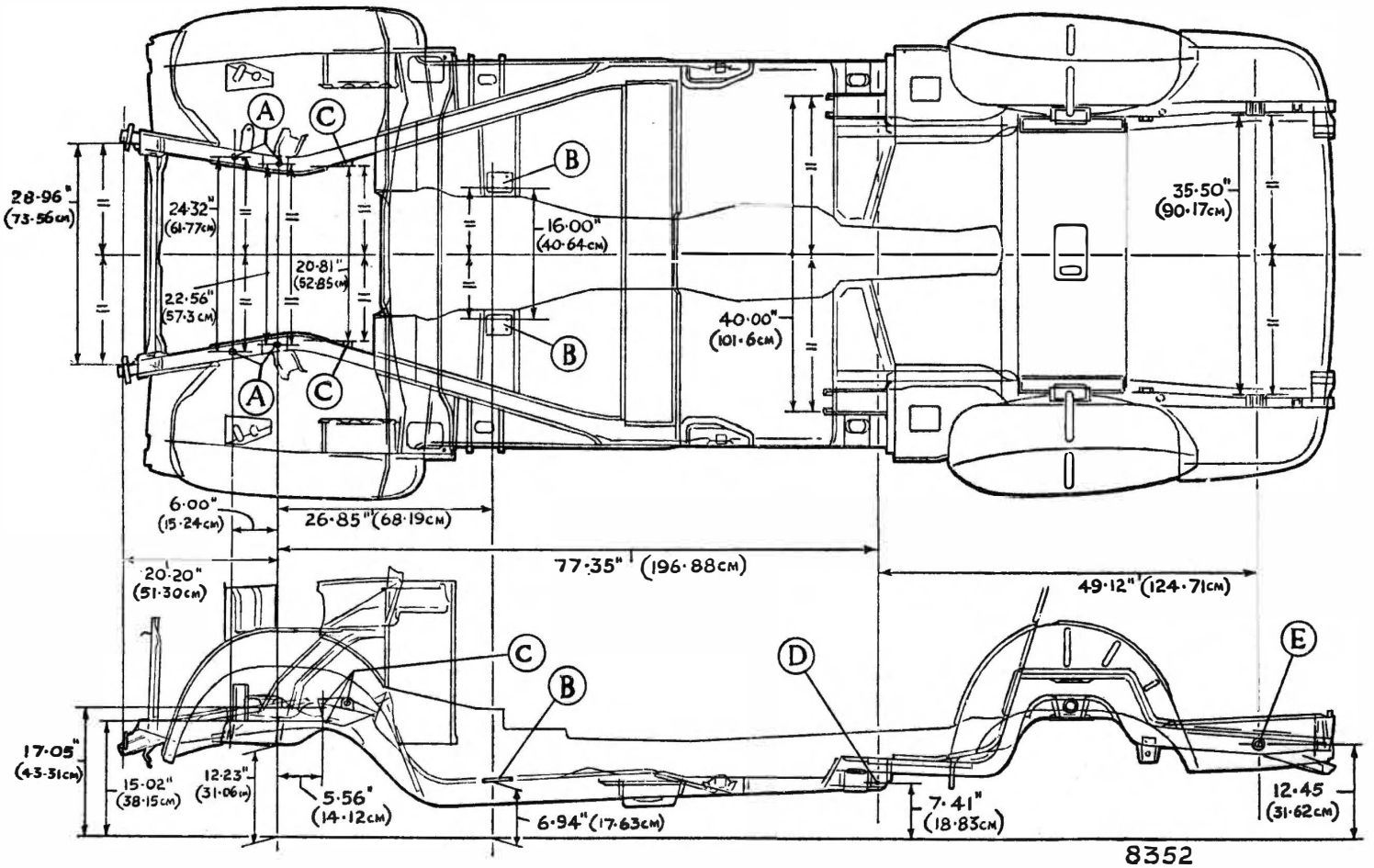

A FRONT SUSPENSION CROSSMEMBER MOUNTING

B REAR ENGINE MOUNTING

C STEERING UNIT MOUNTING

D REAR SPRING FRONT EYE LOCATION

E REAR SPRING REAR SHACKLE LOCATION

PRINCIPAL UNDERFRAME DIMENSIONS

ALPINE

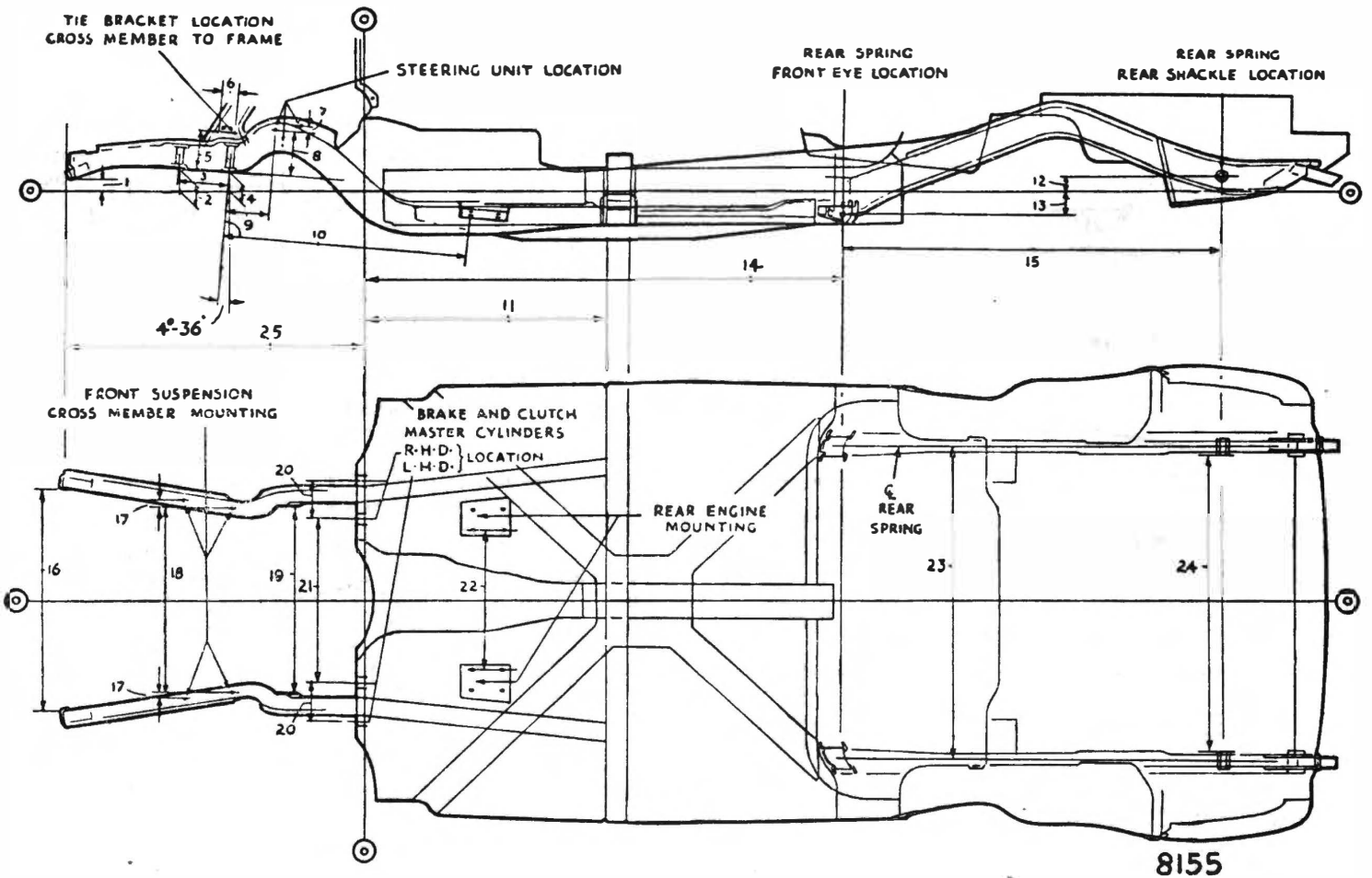

1.—1·66" (4·216 c.m.)
2.—3·12" (7·925 c.m.)
3.—6·00" (15·240 c.m.)
4.—2·64" (6·706 c.m.)
5.—4·50" (11·430 c.m.)
6.—2·18" (5·537 c.m.)
7.—0·53" (1·350 c.m.)
8.—5·15" (13·081 c.m.)
9.—5·56" (14·122 c.m.)
10.—27·78" (70·55 c.m.)
11.—29·44" (74·77 c.m.)
12.—0·25" (0·635 c.m.)
13.—3·97" (10·08 c.m.)
14.—49·14" (124·82 c.m.)
15.—43·42" (110·29 c.m.)
16.—27·12" (69·364 c.m.)
17.—0·88" (2·235 c.m.)
18.—22·56" (57·302 c.m.)
19.—22·34" (56·743 c.m.)
20.—5·00" (12·70 c.m.)
21.—18·25" (46·355 c.m.)
22.—16·50" (41·91 c.m.)
23.—37·50" (95·25 c.m.)
24.—35·84" (91·034 c.m.)
25.—37·12" (94·28 c.m.)

WINDSCREEN

The services of two operators are required to carry out the removal and refitting of the windscreen, one working inside the car and one outside. The windscreen is retained in position by means of a rubber weatherstrip around the periphery. No other form of fixing is used, but the contacting surfaces are treated with "Seelastik" sealing compound during assembly.

To remove

(Minx, Gazelle, Rapier)

Remove wiper arms, interior rear view mirror and sun visors.

Remove bright beading. This is retained by lips formed in the weatherstrip. To release the weather strip from the inner and outer contact surfaces of the assembly, the "Seelastik" seal must be broken. The use of a small screwdriver, from which the sharp edges have been removed is recommended. Care should be taken when drawing this tool around and under the weatherstrip to keep the tip firmly under the lip of the rubber, otherwise damage to the paintwork may result.

When the seal is broken, the glass is removed by applying hand pressure to one of the lower corners, and forcing the windscreen outwards. The second operator (outside the car), can then support the windscreen as it is released.

Remove the weatherstrip from the glass.

(Super Minx, Vogue)

Carry out the instructions as for Minx, but the bright beading is removed on the bench, after the windscreen assembly is detached from the car. In order to remove the beading, release the four cover plates, then free the beading from the retaining lips in the weatherstrip.

(Sceptre)

Carry out the instructions as for Minx, but when the sun visors are removed, release the two windscreen cappings with their clips from the inner lower front edge of the facia crash roll.

Remove the beading from the weatherstrip by first releasing the top and corner cover plates and then releasing the beading from the clips. Before freeing the beading clips, it is advisable to mark the screw positions (with tape) for ease of reassembly. Proceed as for Minx.

(Alpine)

It must be noted that, in order to remove the glass, the complete windscreen assembly must be removed from the car. If a hard top is fitted, this must first be removed. Remove wiper arms.

From below the scuttle, take off the nuts and washers which retain the assembly in position.

These are located, two at each side and three across the scuttle. Certain models incorporate an extra two fixing bolts making a total of seven. With the assembly removed, take off the two side draught rubbers by removing the screws. The two side drip channels are retained by pop-rivets which must be drilled out, and the drip channel removed, in order to gain access to the screws which retain the windscreen assembly. If no pop-rivets are available when replacing the drip channels, suitable self-tapping screws may be used instead.

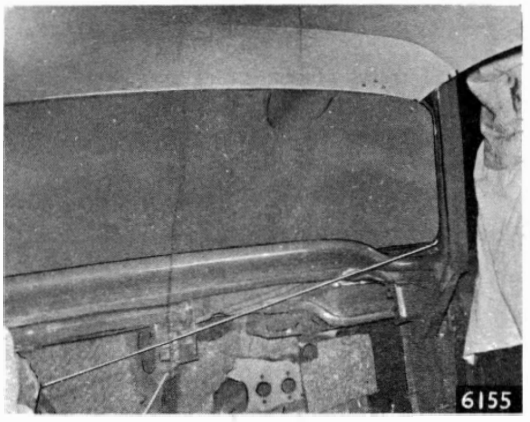

Fig. 1. *Fitting windscreen (typical)*

WINDSCREEN

To refit

(Minx, Gazelle, Rapier, Vogue, Sceptre, Super Minx)

In most instances, refitting is a reversal of the removal procedure. Obviously, such items as corner pieces for weather strip beading, interior mirrors and sun visors will be replaced in the reverse order of removal, but the following method of refitting the windscreen assembly is recommended:—

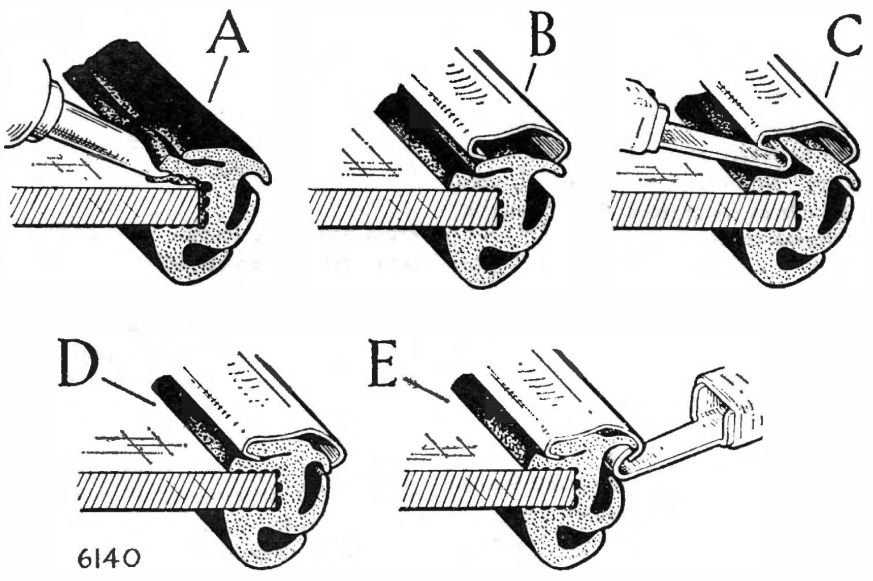

Fig. 2. *Fitting beading to weatherstrip*

Remove all traces of old sealing compound from the glass and weatherstrip. If the screen has been broken, it is imperative that all pieces of glass are removed from the weatherstrip.

Fit the weatherstrip to the glass (see Fig. 2).

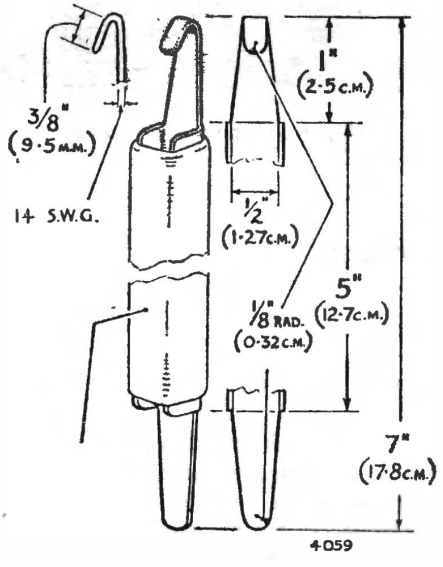

Fig. 3. *Dimensions of special tool*

Place either the top or bottom beading on the weatherstrip (Fig. 2, B) and, commencing at one end, use the special tool (Fig. 3) to lift the weatherstrip into the turned over section of the beading. Fit the remaining beadings in a similar manner (Fig. 2, C, D and E).

Fit the cover plates to the beading by simply snapping them into position.

Apply a coating of "Seelastik" to the face of the weatherstrip which is in contact with the outside face of the glass.

For this operation, a special gun is available from Messrs. Expandite Ltd., Cunard Road Works, London, N.W.10, England.

In the absence of such a gun, it is suggested that an adaptor in the form of a piece of piping with a flattened end could be fitted to a lubricating gun, which has a screw type plunger.

Cut a piece of strong cord of a length considerably greater than the periphery of the glass. The use of thin string should be avoided as this will cut the rubber. Insert the cord into the inner channel of the weatherstrip with the aid of a small diameter piece of pipe, through which the cord passes.

Make sure the loose ends are near the centre of the upper edge of the screen. Apply a coating of "Seelastik" to the outer channel of the weatherstrip which will be in contact with the body flange.

As the windscreen assembly is offered up to the body aperture, pass the ends of the cord into the car.

Press the windscreen into place and work the lip of the rubber over the flange by pulling the ends of the cord. Pull the cord out completely. If the outer lip of the weatherstrip becomes folded under itself, work it free with a small screwdriver.

Fitting the beading to the weatherstrip will be facilitated by making up a special tool (Fig. 3).

Smear the weatherstrip with a soap solution to assist assembly.

Remove excess sealer with white spirit.

BACKLIGHT

All models except Alpine

The services of two operators are required to carry out the removal and refitting operations, one inside and one outside the car.

The glass is located by means of the weatherstrip only, and no other form of fixing is used. The contacting surfaces are treated with "Seelastik" compound during assembly.

The backlight is removed by pressing outwards from inside the car.

To remove

For Rapier cars, release the nuts retaining the beading corner pieces, and remove beading.

To release the lip of the weatherstrip from the body panel, the "Seelastik" seal formed during assembly must be broken. This is done by the same method as given under "Windscreen—To remove".

Apply hand pressure to the inside of the glass and force outwards, complete with weatherstrip. The second operator outside the car, can then support the glass as it is released.

Remove the beading from the retaining lip of the weatherstrip and remove the weatherstrip.

To refit

Remove all traces of sealing compound from the glass and weatherstrip before refitting.

Apply a coat of "Seelastik" to the face of the weatherstrip which is in contact with the outside face of the glass.

Fit the weatherstrip to the glass, and fit any bright beading, using the method and tool shown in Figs. 2 and 3.

Proceed as for the instructions given for fitting windscreen to Minx, using the cord method given there.

For Rapier, replace the corner pieces and tighten the nuts.

Remove any surplus sealer with white spirit.

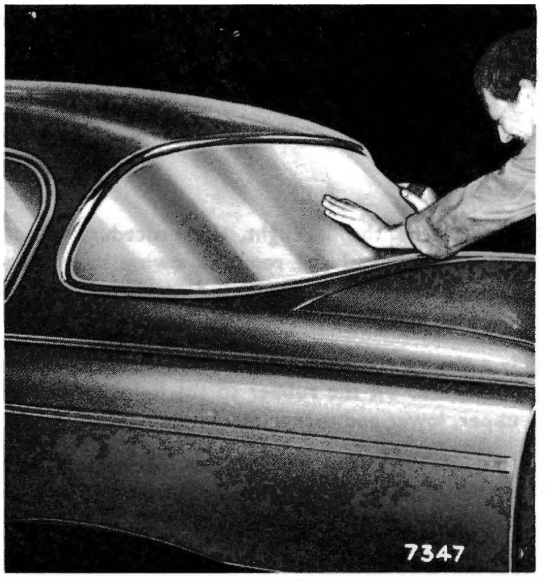

Fig. 4. *Fitting backlight (typical)*

(*Estate cars*) (*See also page 25*)

Instructions for removing and refitting the tailgate windows are basically the same as those given for removing and refitting the windscreen.

Fixed side windows

All fixed side windows on Estate cars can be removed and refitted using the same method as given for removing and refitting the windscreen.

BACKLIGHT

(Alpine Hardtop only)

The backlight is located by means of the glazing rubber around its periphery only. No other fixing is used, but the contacting surfaces are treated with "Seelastik" during assembly.

To remove

Take off the two corner cover plates from the upper and lower chrome mouldings.

Starting at the ends, remove the upper and lower mouldings.

From inside the car, remove the filler strips from the upper and lower rubbers.

Starting from the centre of the top rubber, gently push out the backlight. In all probability the rubbers will remain in the hard top aperture.

To refit

When refitting the backlight, the procedure is not a complete reversal of the removal, owing to the back light being made of Perspex, and is therefore, more flexible than glass.

Apply a coating of "Seelastik" to the contacting surfaces of the rubber. Fit the rubber to the light, followed by the upper, lower and corner mouldings.

Cut a piece of strong cord of a length considerably longer than the periphery of the light. Thin string will cut the rubber.

Insert the cord into the inner channel of the weatherstrip in a similar manner to that shown in Fig. 1, but make sure the loose ends are near to the middle upper edge.

Press the assembly into the car from outside, with the two ends of the cord on the inner side of the light.

Work the lip of the rubber over the flange in the aperture by pulling on the ends of the cord. Pull out the cord completely.

Finally, refit the filler strips into the glazing rubbers, starting at the ends and pushing into place with the thumbs.

Remove any surplus sealing compound with petrol or white spirit. Care must be taken not to scratch the surface of the light.

INTERIOR DOOR HANDLES

To remove

Window regulator (See Fig. 5)

(Super Minx, Vogue, Sceptre)

Turn the escutcheon (8) so that the radial groove in its face is parallel with the dowel hole in the handle (5).

With an awl, tap out the pin (7) securing the handle to the shank of the window regulator and remove the handle from the escutcheon.

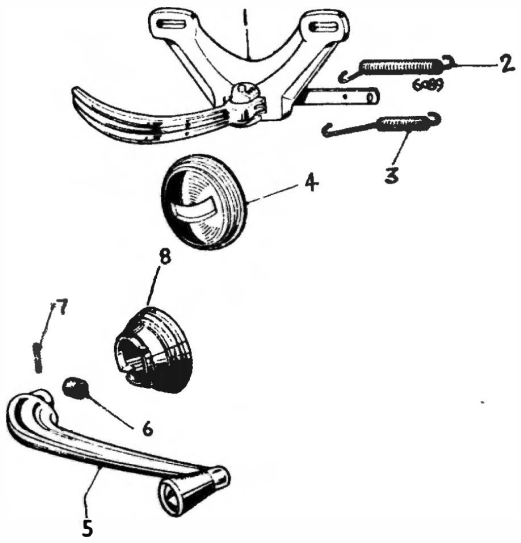

Fig. 5. *Interior door handles*

1. LOCK HANDLE
2. SPRING (FRONT DOOR)
3. SPRING (REAR DOOR)
4. ESCUTCHEON
5. WINDOW HANDLE
6. RUBBER PAD
7. PIN
8. ESCUTCHEON

Door lock remote control (See Fig. 5)

Remove the escutcheon (4) by a sharp pull (if stiff, ease with a screwdriver), turn through 90° and take off the escutcheon from handle. Unless the handle is damaged, nothing will be gained by further stripping.

Refit by reversing these instructions.

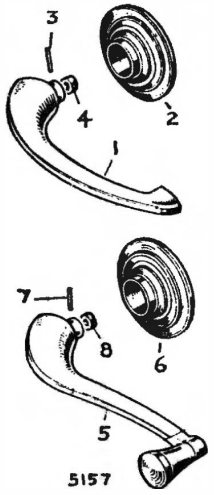

Fig. 6. *Interior door handles*

1. HANDLE, DOOR LOCK
2. ESCUTCHEON
3. PIN
4. RUBBER PAD
5. HANDLE, WINDOW REGULATOR
6. ESCUTCHEON
7. PIN
8. RUBBER PAD

INTERIOR DOOR HANDLES

To remove (See Fig. 6)

Window regulator and remote control

(Rapier, Gazelle, Minx)

Turn the escutcheon so that the radial groove in its face is parallel with the dowel hole in the handle.

Press the escutcheon against the trim panel, this will expose the retaining pin.

With an awl, tap out the pin securing the handle to the spindle.

Remove the handle and escutcheon from the spindle.

This operation is facilitated by the use of a forked wedge inserted between the handle and the escutcheon from the underside.

Repeat this procedure with the door lock handle.

To refit

Slide the window regulator handle escutcheon on to its spindle.

Slip the handle into position on the spindle, matching its position with the handle on the opposite door.

Insert the pin into the hole in the handle shank, line up the groove in the escutcheon and push the handle in towards the trim pad.

When the pin locates with the hole in the spindle, force it home, and allow the escutcheon to return over the handle shank.

Make sure that both windows are in the same position before the positions of the regulator handles are matched.

Repeat the refitting procedure with the door lock remote control handles.

INTERIOR DOOR HANDLES

To remove and refit (See Fig. 7)

(Alpine)

The procedure for removing and refitting is the same as that given for "Rapier" except that between the handle and the escutcheon is a cup and a spring.

Push the cup inwards towards the trim pad, turning while still pressed in until the end of the handle retaining pin is exposed.

Tap out the pin, and take off the handle cup and spring, followed by the escutcheon.

Refitting is a reversal of the above procedure.

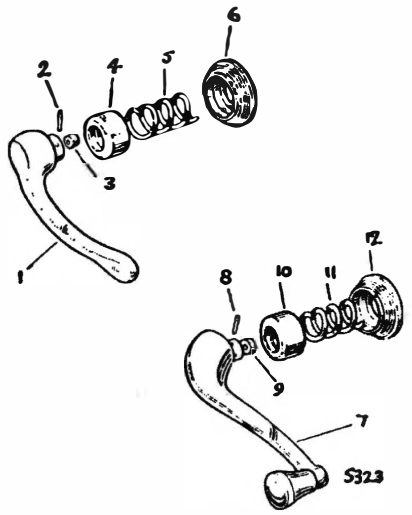

Fig. 7. *Interior door handles (Alpine)*

1. HANDLE, DOOR LOCK
2. PIN
3. RUBBER PAD
4. CROWN (CUP)
5. SPRING
6. ESCUTCHEON
7. HANDLE, WINDOW REGULATOR
8. PIN
9. RUBBER PAD
10. CROWN (CUP)
11. SPRING
12. ESCUTCHEON

DOOR ARMREST

To remove and refit

(*Vogue, Sceptre*)

From below the armrest, remove the two special slotted nuts.

When pulling away the armrest from the door, take care not to lose the washer.

DOOR PULL

To remove and refit

(*Rapier, Alpine*)

These are retained by two self-tapping screws, the removal of which frees them from their location on the door.

DOOR TRIM PAD

To remove

(*All models*)

Remove the window regulator and door lock remote control handles and escutcheons.

The trim pad is attached to the inner panel of the door by spring clips which are concealed.

Some models may have additional self-tapping screws, the heads of which, if fitted, are visible.
Remove these first.

Insert a broad bladed knife or screwdriver blade under the edges of the trim pad at any convenient point.

Slide the blade along until it encounters a clip.

Ease the trim pad away from the door, working progressively around the edges and keeping as close to the clips as possible.

When all the clips are free, pull the pad downwards until the upper edge is clear of the retaining flange on the door panel.

To refit

Enter the upper edge of the trim pad into the retaining flange and fit the spring clips on the trim pad into the corresponding holes in the door panel.

Press the trim pad firmly home and refit interior handles.

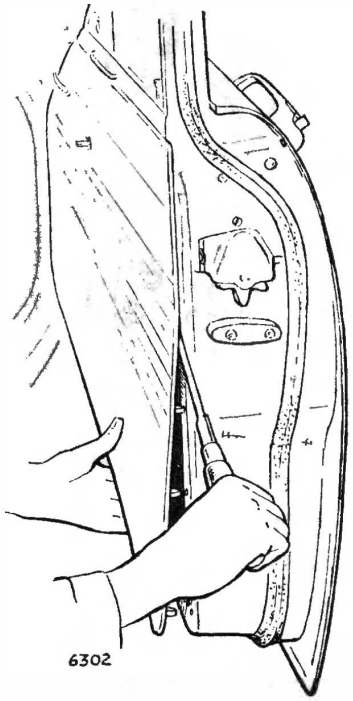

Fig. 8. *Remove trim pad (typical)*

NO-DRAUGHT VENTILATOR

Self-locking catch (*where fitted*)

To release the self-locking catch on the ventilator press the button (A), and lift the lever.

The spring mechanism automatically locks the catch when the lever is pressed home into the locking position.

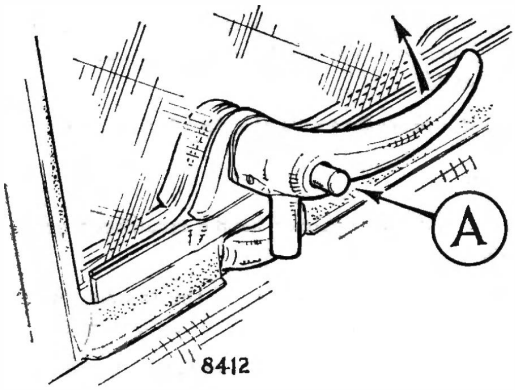

Fig. 9. *Self-locking catch*

NO-DRAUGHT VENTILATOR

To remove and refit

(*Sceptre, Vogue, Rapier*)

Remove the locating screw securing the ventilator and frame to the forward edge of the door. The screw is accessible under the rubber door seal.

Slightly lift the ventilator and withdraw, complete with outer frame, towards the rear and out of the door.

To dismantle the ventilator from the frame, remove the two nuts and shakeproof washers from the lower pivot assembly and remove the clamp plate.

Remove the retaining split pin, washer and stop plate.

Take note which way round the stop plate is fitted.

By pressing downwards, on the ventilator, the rubber weatherstrip will compress sufficiently to allow the ventilator to be withdrawn from the top pivot pin.

Reassembly is the reversal of these instructions, but take care not to overtighten the two nuts on the clamp plate.

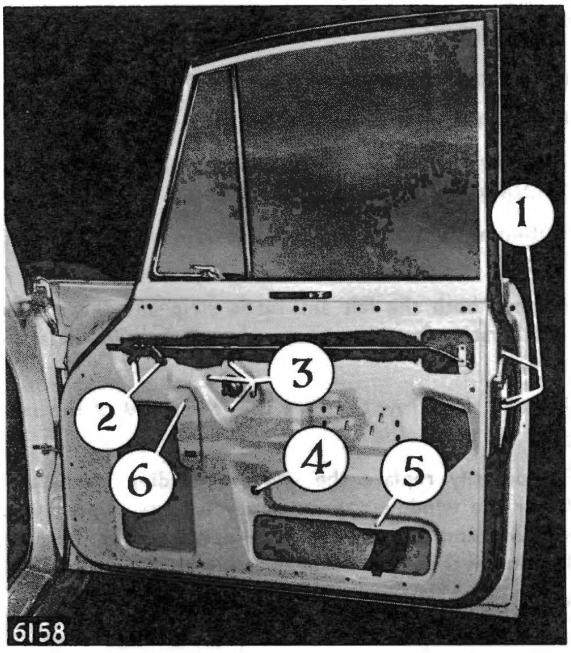

Fig. 10. *View of front door (typical)*

1. LOCK ASSEMBLY
2. REMOTE CONTROL SCREWS
3. REGULATOR SCREWS
4. GLASS CHANNEL SCREW
5. BOTTOM STOP BRACKET SCREW
6. ANTI-RATTLE BRACKET SCREW

NO-DRAUGHT VENTILATOR

To remove and refit (See Fig. 10)

(*Minx, Gazelle, Super Minx*)

Remove the interior handles and trim pad, and carefully remove the covering now exposed.

Withdraw the screw (5) and remove bottom stop bracket.

Remove both the felt anti-rattle and rubber weather-strip from the lower edge of the window aperture.

Temporarily, replace the window regulator handle and lower the window to approximately the halfway position, support the window and free the regulator operating arm from its location in the glass channel (camplate).

Lower the window to the bottom of the door.

Remove the screw (4) from the lower end of the front glass run channel and pull out both this and the top channel from their retaining clips in the window frame.

The ventilator is now held by one screw at its upper hinge, access to which is gained from beneath the rubber door seal.

Remove the screw, and the ventilator can be removed from the door by pulling the rear top edge towards the window aperture and freeing the lower swivel bracket from its location.

Reassembly is a reversal of these instructions.

The use of a piece of flat sheet steel: $\frac{1}{16}$ in. (1·5 mm.) × $\frac{1}{2}$ in. (12·7 mm.) × 4 in. (10 cm.), turned up at one end to form a hook will greatly facilitate the replacement of the small clips which retain both the felt anti-rattle and the rubber weatherstrip.

WINDING WINDOW (*Front door*)

To remove

(*Minx, Gazelle, Rapier*)

Remove interior handles and trim pad. If the door panel has an inside covering, carefully peel this away.

Remove the bottom stop screw.

Temporarily replace the window winding handle, lower the window to the bottom of the door and clear of the operating arms.

Remove screw, nut and washer from the rear end of the guide channel (camplate) in which the arms operate.

Remove the top stop.

Lift the glass up the channel in which it normally operates and out of the top of the door.

To refit

Replacement is a reversal of the removal procedure.

WINDING WINDOW (*Front door*)

To remove

(*Sceptre, Vogue, Super Minx*)

Remove the no-draught ventilator, and pull the window up and out of the door.

To refit

Reassembly is a reversal of these instructions, except that the felt anti-rattle and the rubber weatherstrip should be fitted after the window has been replaced in the door, but before the window regulator arm is fitted to its location.

Fig. 11. *Remove/refit door glass (Alpine)*

WINDING WINDOW (*Front door*)

To remove

(*Alpine*)

Remove interior handles and trim pad.

Replace window winding handle temporarily and lower window until the regulator guide channel (camplate) is visible through the aperture in the inner door panel.

Spring out the regulator operating arms from their locations.

Remove the furflex anti-rattle strips by easing them down with a screwdriver.

Release the front and rear glass channels.

Turn the window (Fig. 11) and lift the glass up and out through the door aperture.

When refitting, replace the anti-rattle strips first, but leave the back ends free.

After replacing the window, fit the rear ends of the anti-rattle strips.

WINDING WINDOW (*Rear*)

To remove

(*Minx, Gazelle, Super Minx, Vogue, Sceptre*)

Remove the interior handles and trim pad.

Carefully peel off the inner covering on the door panel (if fitted).

Withdraw screw (5, Fig. 10) and remove bottom stop bracket.

Remove both the felt anti-rattle strip and the rubber weatherstrip from the lower edge of the window aperture.

Remove the screw (4) from the lower end of the rear glass run channel.

Temporarily replace the window winding handle and lower the window approximately halfway, support the window, and free the regulator operating arm from its location in the glass channel (camplate).

Release the rear glass run channel from its clips. There is no necessity to disturb the front channel when removing the window.

Lower the window to the bottom of the door, turn through 90° so that the upper edge becomes the forward edge, and pull the window up and out of the door.

To refit

Refitting is a reversal of the removal instructions, but attention is drawn to the tool for refitting the retaining clips of the anti-rattle felt and rubber weatherstrips.

Dimensions for making the tool are given under "No-draught ventilator".

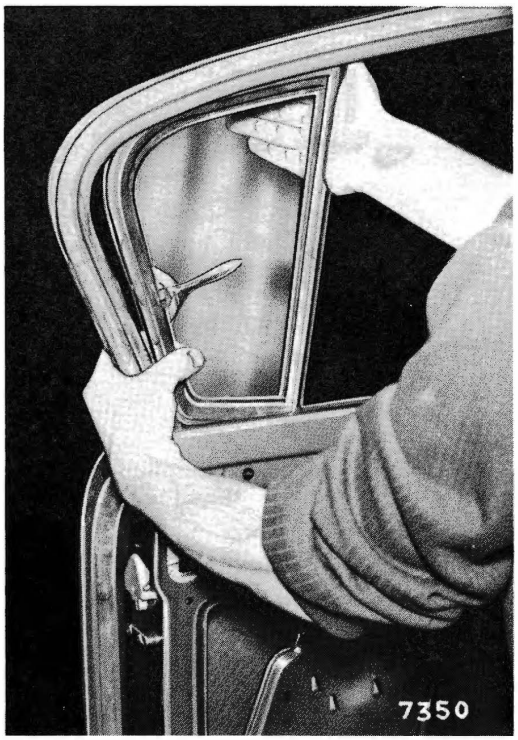

Fig. 12. *Refitting rear door ventilator*

REAR DOOR VENTILATOR

To remove and refit

(*Sceptre*, *Vogue*)

Remove winding window.

Grasp the ventilator firmly at the rear top edge and pull down towards the window aperture.

When refitting, reverse these instructions.

QUARTER LIGHT GLASS

To remove and refit

(*Rapier*)

Remove window winding handle.

Remove rear seat cushion and squab. The retaining screws for the squab are accessible from inside the boot.

Remove the trim panel from below the window aperture.

Remove the cotter pin (if fitted) and large nut from below the window aperture.

Temporarily replace window winding handle and lower window to approximately the halfway position.

Release the operating arm from its guide channel.

Pull the glass assembly up and out of the body side by grasping the upper forward edge and lifting off its pivot.

Note

When removing the left-hand light it is advisable to remove the interior lamp, in which case refer to Section N.

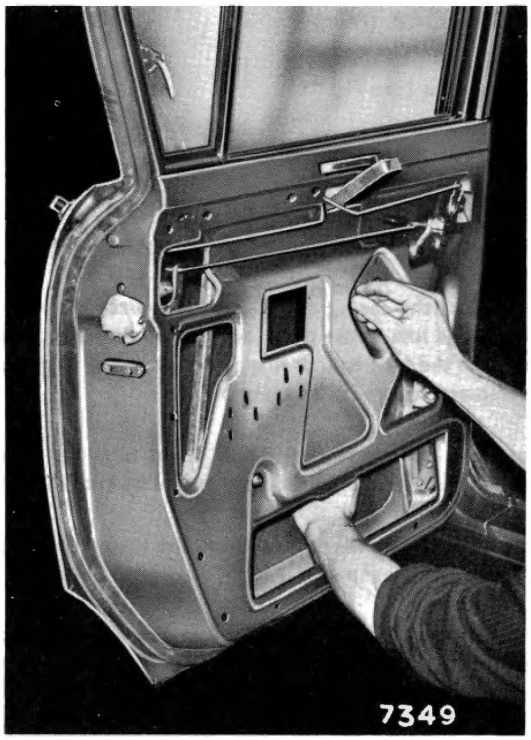

Fig. 13. *Removing regulator screws (typical)*

WINDOW REGULATOR

To remove and refit

(All models)

Remove interior trim pad and handles.

Temporarily replace window winding handle and lower the glass to approximately the halfway position and support the glass.

Release the lower ends of the glass run channels.

Remove the screws securing the regulator to the inner door panel.

Spring the operating arms from their location in the guide channel (camplate) of the glass, and remove the regulator from the door.

DOOR LOCK *(Front)*

To remove (See Fig. 14)

(Super Minx, Sceptre, Vogue)

Remove interior handle, door trim pad and cloth or paper covering from the inner door panel.

Disconnect the spring clip (2) which secures the remote control and link to the door lock and remove the control link from the lock end. It may be found easier to remove the remote control as an assembly.

Press the locking plunger knob down into the locked position and remove the locking control from the lock (1).

Take out the screw which secures the lower end of the rear glass run channel.

This channel passes over the lock, therefore the lock cannot be removed until the lower end of the glass run channel has been freed from its location.

Disconnect the inter-connecting lever between the lock and the exterior handle (4).

Finally, remove the lock securing screws from the shut face of the door, noting that two of them also retain the lock dovetail.

Mark the position of the dovetail before removal. Check also that the child safety lever (3) is not binding in the operating slot, especially at the top.

Replacement is a reversal of these instructions.

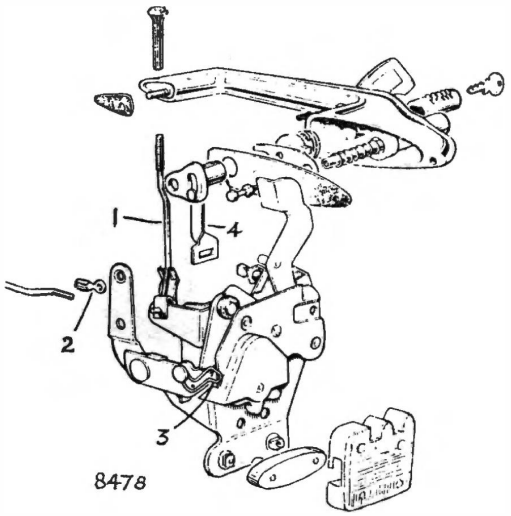

Fig. 14. *Front door lock and exterior handle*

1. LOCKING CONTROL
2. REMOTE CONTROL LINKAGE
3. CHILD SAFETY LEVER
4. CONNECTING LEVER

DOOR LOCK *(Rear)*

To remove and refit

(Super Minx, Sceptre, Vogue)

The procedure for removing the rear door lock is exactly the same as for the front door lock, except that there is no necessity to disturb the glass run channels; neither is there any inter-connecting link between the lock and exterior handle.

LOCK REMOTE CONTROL

To remove and refit

(Super Minx, Sceptre, Vogue)

Remove interior handle, door trim pad and inner covering.

Remove the two screws which retain the operating handle to the inner door panel.

Disconnect return spring from the inner door panel.

Disconnect the spring clip which secures the remote control link to the operating lever of the door lock and remove the assembly from the door.

To refit, reverse the above instructions but fit new spring clips.

DOOR LOCKS

To remove *(See Figs. 15 and 16)*

(Minx, Gazelle, Rapier, Alpine)

Remove the interior trim.

Remove the three securing screws which hold the remote control to the door and swing the unit and connecting link vertically downwards. In this position the unit can be detached from its dowel on the operating lever.

Remove the securing screws in the shut face of the door.

On front doors (where fitted), press the safety catch knob downwards into the locked position.

Unscrew the knob and swing the control wire down against the lock. The lock unit is now free to be removed.

If it is necessary to remove the rear safety catch assembly, press the knob downwards into the locked position so that the clip which holds the control wire to the actuating lever can be detached.

The assembly can now be withdrawn through the lock aperture in the shut face of the door.

To refit

Reverse the above instructions except that when the remote control unit is fitted, slide the unit away from the lock until approximately $\frac{1}{64}$ in. (1 mm.) free movement is obtained.

A small working clearance is essential for the correct functioning of the lock mechanism.

After refitting the door locks and remote controls, the safety catch controls must be adjusted as follows:—

Check that the catch wires do not foul their respective apertures, bend them if necessary.

Press the control knob downwards into the locked position, screw the knob home, leaving a small clearance between the head and the door sill to ensure that the full travel of the control is not restricted.

On rear doors, reconnect the catch control wire, fitting the spring clip to the lock actuating lever.

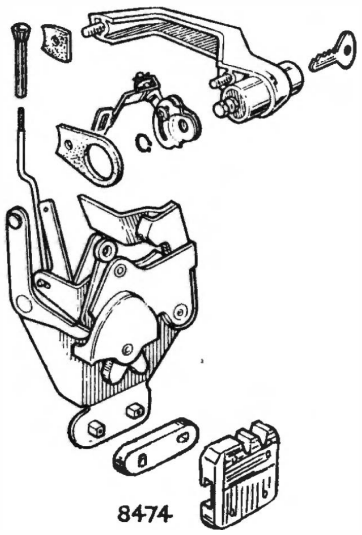

Fig. 15 *Front door lock and exterior handle*

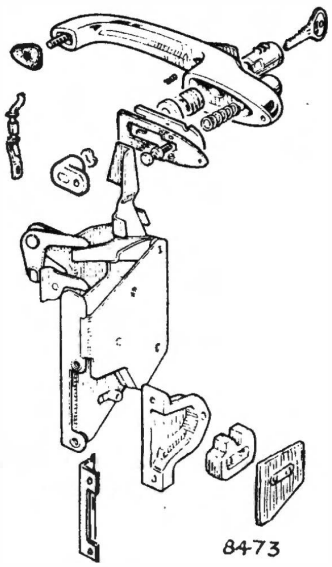

Fig. 16. *Door lock and exterior handle (Alpine)*

EXTERIOR DOOR HANDLES

To remove

(All models)

Remove the door trim pad.

From inside the door casing, disconnect the interconnecting lever between the lock and the exterior handle, following with the removal of the retaining nut and washer at the front, and the screw and washer at the rear end of the handle respectively. Take care not to lose the washers. It should be noted that the interconnecting lever is fitted to front doors only.

To adjust

On the reverse side of the push button is a plunger, held by a locknut. The correct clearance between the plunger or head and the lock contactor should be $\frac{1}{32}$ in. (1 mm.) and must be checked when the handle is fitted to the door. Access for this is gained through the aperture in the inner door panel.

When adjusting, rotate the plunger bolt in or out until the necessary clearance has been obtained, and tighten the locknut.

To refit

Reverse the removal instructions, not forgetting the two sealing washers between the handle and the outer door panel.

STRIKER UNIT

To remove

(All models)

It is not necessary to disturb this component other than to fit a replacement, or to make adjustments.

To make adjustments, slacken the retaining screws in the striker, move the unit as necessary, and tighten the screws.

Remove the screws completely to detach the unit.

To refit

Attach the striker unit loosely to the door pillar, moving the unit to the desired position before finally tightening the securing screws.

When fitted, the unit should be at right-angles to the door hinges.

GLOVE BOX LID LOCK

(All models)

If this lock has been removed and dismantled for any purpose, the following assembly sequence is recommended:—

Before fitting the bolt (A) the loop of the spring (B) and the leg of the bell-crank lever (C) must both be located in the slot in the bolt. The bridge piece (D) must now be pushed downwards and retained against the spring so that the bolt is in position over it. The outer cover can now be secured over the bolt by its fixing screws.

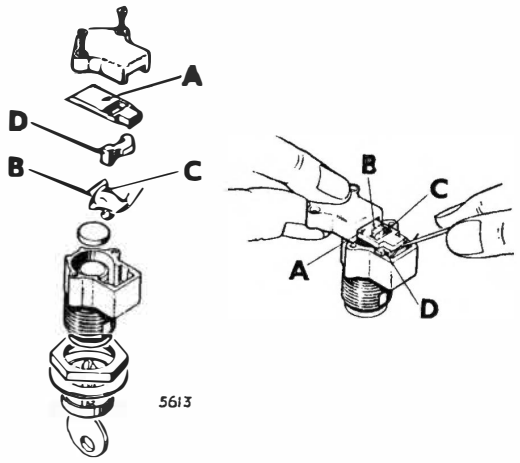

Fig. 17. *Glove box lock assembly*

BONNET

To remove

(All models)

Support the bonnet in the open position with suitable slings.

Remove the securing screws retaining the bonnet hinges to the bonnet panel and lift off the bonnet.

If it is desired to remove the hinges, remove the setscrews securing the hinges to the car.

The number of screws and the type of attachment varies slightly according to model, but the basis of these instructions remains the same.

Refit by reversing the removal procedure.

BONNET LOCK

To remove

(Minx, Super Minx, Vogue, Sceptre)

Disconnect return spring and the inner cable nipple from the catch.

Take out the setscrews and washers from the cover plate and remove the lock assembly.

The bonnet lock striker is retained by setscrews and washers in the striker plate. When correctly adjusted, the bonnet should have at least $\frac{1}{32}$ in. (1 mm.) up and down movement in the locked position.

The bonnet lock handle is removed after freeing the operating cable from the clip in the wing valance, following with the removal of the setscrews and washers which retain the assembly, below the parcel tray in the interior of the car.

When refitting, do not adjust the inner cable too tightly, so that it is under constant tension.

BONNET LOCK

To remove

(Rapier)

To obtain better access, it is advisable to remove the radiator. (See Section A).

Take out the setscrews securing the lock assembly.

Drop the lock assembly out underneath the lock platform.

Release the operating cable and safety catch linkage, and remove the lock assembly.

Reassembly is reversal of the removal procedure.

To remove the striker, undo the locknut from the baffle into which the unit fits, and turn in an anti-clockwise direction by means of the screwdriver slot provided.

Replace the striker unit by reversing this procedure.

Adjustment of the striker is carried out by screwing the striker pin in or out according to requirements, finally locking up with the locknut.

When correctly adjusted, the bonnet should have at least $\frac{1}{32}$ in. (1 mm.) up and down movement in the locked position.

BONNET LOCK

To remove

(Alpine)

Remove the cotter pin and flat washer retaining the control rod slide and lift off slide.

Take out the setscrews with their washers and lift off the lock.

To remove the striker unit, take out the setscrews and the flat and spring washers.

Replace both striker unit and lock assembly by reversing the above procedure.

Adjustment of the striker is carried out by screwing the striker pin in or out, finally locking up with the locknut.

FRONT GRILLE ASSEMBLY

To remove

(Sceptre)

The outer grille can be detached by removing the retaining screws, lifting the outer end of the grille gently, to clear the headlamp assembly, and sliding the grille outwards away from the centre grille.

This method of removal applies to both outer grilles.

The centre grille may be removed as a separate unit, by removing the holding screws.

Reassembly is a reversal of the removal procedure.

FRONT GRILLE ASSEMBLY

To remove

(Rapier, Vogue)

From the reverse side of the centre grille, remove the retaining screws.

Before the side grilles can be removed, refer to Section N for the removal of the side lamp assemblies.

With the side lamps removed, simply take out the grille retaining screws.

Reassembly is a reversal of the removal instructions.

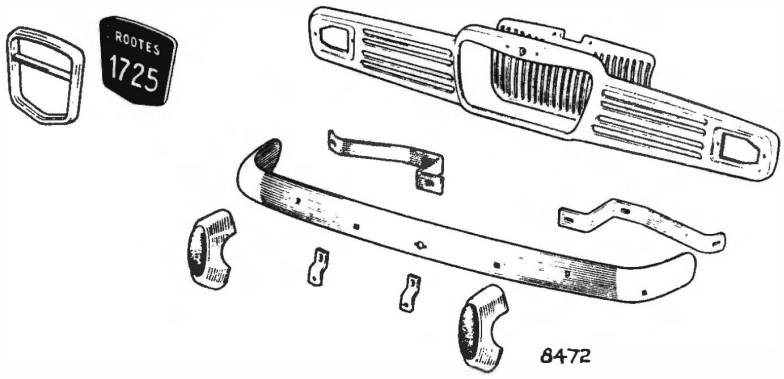

Wing badge (all models). Bumper assembly (typical). Radiator grille assembly (Gazelle only)

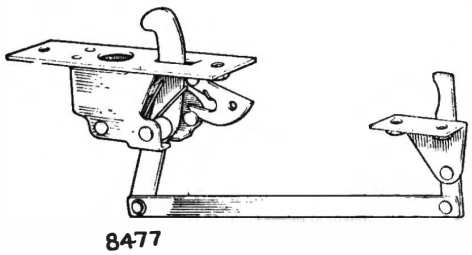

Bonnet lock assembly (Gazelle only)

Fig. 17

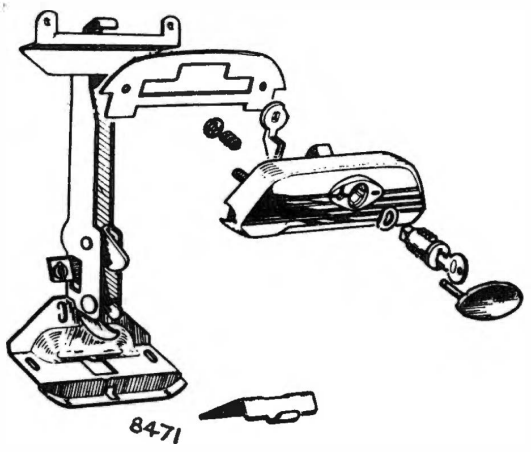

Boot lock assembly (except Minx)

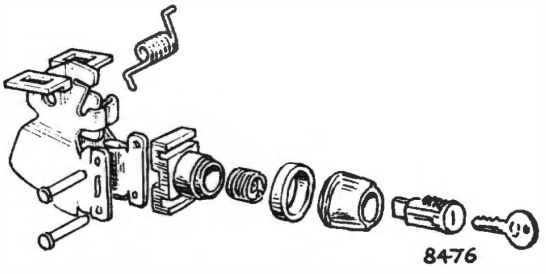

Boot lock assembly (Minx)

Fig. 18

FRONT GRILLE ASSEMBLY

To remove

(Minx, Super Minx)

Remove the retaining screws from the front of the grille, and the centre screw, accessible when the bonnet is open, and remove the grille as an assembly.

The grille badge can only be removed after the grille is removed.

Reassembly is a reversal of the removal procedure.

FRONT GRILLE ASSEMBLY

To remove

(Gazelle)

Remove all the retaining screws from the grille, one of which is accessible by removing the grille badge, and take off the grille.

Reassembly is a reversal of the removal procedure.

FRONT GRILLE ASSEMBLY

To remove

(Alpine)

Simply remove the retaining screws from behind the grille and remove the grille.

Refitting is a reversal of the removal procedure.

FRONT AND REAR BUMPERS

To remove

(All models)

The bumpers can be removed, complete with back bars, by removing the bolts retaining the back bars to the body.

Alternatively, the blades only may be removed by releasing the nuts from the special dome-headed bolts attaching the blade to the back bars.

BOOT LID

To remove

(All models)

Support the lid with a suitable sling in the fully open position, and remove the setscrews from the hinge attachment points.

If it is necessary to remove the spring balance and hinges, take out the setscrews retaining the hinge assembly to the body.

Refitting is a reversal of the removal procedure, but the boot lid must be adjusted to fit the body aperture, also for the correct functioning of the lock.

BOOT LID LOCK

To remove

(All models, except Minx and Alpine)

With the lid in the raised position, and working from the underside of the lid, take out the four cover plate retaining screws. Remove the lock retaining screws. Remove the handle from the lid by removing the retaining nuts and washers.

Refitting is a reversal of the removal procedure.

BOOT LID LOCK

To remove

(Minx)

Remove the two retaining screws and washers.

The lock can now be removed by pulling out from inside the boot.

The striker plate is removed by taking out the four holding bolts and washers.

The holes in the plate are elongated to provide a means of adjustment.

Reassembly is a reversal of the above procedure.

BOOT LID LOCK

To remove

(Alpine)

From below the outer edge of the boot weatherstrip, remove the two self-tapping screws.

Remove the two screws from the rear of the top face of the lock, and remove the lock from inside the boot.

The striker plate is removed by taking out the four holding bolts.

The holes in the plate are elongated to provide a means of adjustment.

SPARE WHEEL CARRIER

To remove

(All models except Alpine)

From below the car take off the rubber dust cover from the lower end of the spare wheel release screw, and remove the retainer. (Either a dowel pin or a circlip).

Lower the carrier to its fully open position and remove the spare wheel.

Continue lowering the carrier until it hangs free of the release screw.

From the front end of the carrier remove the pins from the two attachments to the underframe, and pull to one side to release.

Refitting is a reversal of these instructions.

AIR INTAKE

To remove

(Sceptre, Vogue, Super Minx)

Although it is possible to remove the air intake without removing the windscreen wiper arms and blades, it will be found much easier when replacing the intake if these items have been removed.

For the removal procedure refer to Section N.

With the bonnet in the raised position remove the air intake retaining screws.

For the dismantling procedure for the heater and fan units refer to Section R.

FRONT SEAT

To remove

(All models)

In each case, all that is required is the removal of the retaining bolts from the seat frame.

On models with bench seats, it may be necessary to slide the seat forward to gain access to the rear bolts, and rearwards to remove the front bolts.

To refit

If the seat slides and/or adjustment control wires are removed for any reason, the wires must not be too tight when the seat is reassembled. A small amount of slack is preferable, in order to allow the spring-loaded locks to snap fully home into the locked position.

FRONT SEAT

To remove trim

(All models)

Remove the seat from the car.

Turn the seat over and remove the retaining clips, taking care not to damage the trim. The seat padding is now free to be removed from the seat.

REAR SEAT

To remove *(cushion)*

(Sceptre, Vogue, Super Minx, Gazelle, Rapier)

Lift the forward edge of the cushion clear of the front retaining valance and remove the cushion.

To remove *(squab)—not Rapier*

From below the front lower edge of the squab, approximately halfway between the transmission tunnel and the inner wheel arch panel, prise up the clips around the seat frame and ease the frame away from the clips by careful use of a screwdriver.

Remove the squab by lifting up from the lower edge and pushing in at the top front to free the retaining hooks from the rear of the squab.

The refitting of both cushion and squab is a direct reversal of the removal procedure.

To remove *(squab)—Rapier*

Pull the lower edge of the squab forward, lift upwards to release the retaining clips and remove.

To refit, locate the squab into the retaining clips and press down into place.

REAR SEAT

To remove

(Alpine)

Release the press fasteners and remove the rear seat.

REAR PARCEL TRAY

To remove

(All models except Alpine)

Remove the complete rear seat assembly.

Gently release the forward edge of the parcel tray top trimming from its position on the front of the rear squab panel.

With the tip of a screwdriver ease the trim clips from their locations.

When replacing the tray, the edge of the top trimming can be re-fixed with rubber solution.

FACIA CONSOLE

To remove

(Sceptre, Rapier)

Unscrew the gear lever knob. Remove the screw securing the console top panel at its rear end and lift the panel, disengaging the two locating pegs at the front end.

Disconnect the cables from their connections, noting their colours and positions.

Remove the nuts, washers and screws securing the console body, and pull off the two heater hoses. Remove the console body.

Refitting is the reversal of the removal procedure.

FACIA PANEL

To remove

(All models)

Reference should be made to Section N for the removal of the instruments, and to Section R for the removal of the heater controls.

Both the instrument panel and the end facia panels are retained by rubber buffers along their upper edges, and by screws along their lower edges.

With the removal of the screws from the lower edges, simply pull down the panels. If the rubber buffers come adrift during the removal process, they should be attached to their respective panels by a suitable adhesive.

To remove the "A" post finisher mouldings, remove the clips from the rear of the mouldings.

Reverse these instructions when re fitting.

HEAD LINING

To remove

(All models except Alpine)

Disconnect the battery.

Remove wiper arms, sun visors, and rear view interior driving mirror.

Remove roof lamp assembly.

Remove rear seat cushion and squab.

If desired, the front seat assembly can be removed. This in no way affects the removal of the head lining, it only gives more room in which to operate.

Remove both windscreen and backlight assemblies.

Release the furflex piping from above all doors, and down as far as the striker.

Remove the rear quarter trim panels and the upper half of the "BC" post trim

Remove the clips securing the edges of the lining to the flanges of the doors, windscreen and backlight apertures (if they are fitted), and release the lining. All edges are secured to the flanges, in production, by an adhesive.

The lining is supported by the listing rails only.

Remove the front listing rail from its location above the windscreen aperture.

Continue to release the remaining rails in turn, by springing the lower edges inwards to release them from the locating holes in the cantrails. Take note of the position of the rails, identified by the colours on the ends, as the rails MUST be fitted in their original positions.

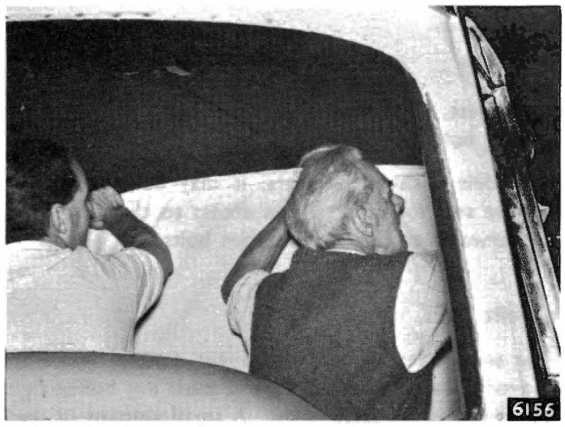

Fig. 20. *Fitting head lining (typical) (Sceptre, Vogue, Super Minx)*

To refit

The services of two operators are necessary to fit the head lining.

In order that the lining will conform to the shape of the roof, listing rails of different contours are used, the ends of which are coloured for identification, and the positions of which MUST be observed when removing the lining, so as to assure correct reassembly.

Clean off all traces of adhesive from the flanges of the doors, windscreen, and backlight apertures.

Before refitting the new head lining, apply a suitable adhesive to the flanges and allow it to become nearly dry.

Sceptre, Super Minx, Vogue

Reverse the removal procedure by commencing with the fitting of the listing rail over the backlight aperture first, and working towards the front of the vehicle.

If the lining is fitted to the front first, it may prove difficult to fit the lining to the hooks above the backlight aperture.

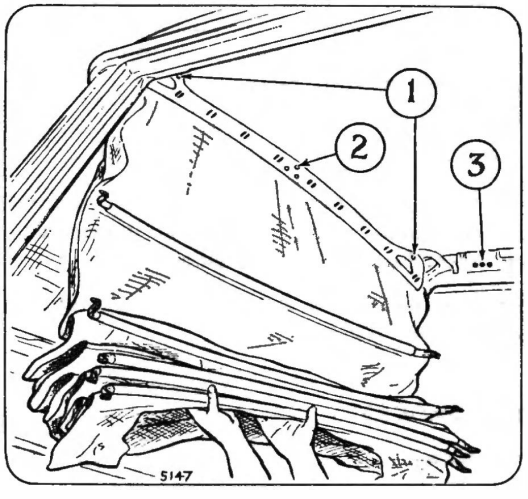

Fig. 21. *Fitting head lining (typical) (Minx, Gazelle, Rapier)*

1. SUN VISOR SCREWS
2. DRIVING MIRROR SCREWS
3. ALTERNATIVE HOLES FOR FRONT LISTING RAIL

Minx, Gazelle, Rapier

Reverse the removal procedure, by starting at the front above the windscreen aperture. After fitting the header pad, and BEFORE fitting the remainder of the lining, secure the header pad by temporarily replacing the sun visor and rear view mirror retaining screws, otherwise, when pulling on the lining to remove the creases the header pad will be pulled out of position necessitating starting again. The lining when fitted must be free from creases, with no sagging anywhere.

Fig. 22. *Fitting head lining (Alpine hardtop)*

HEAD LINING

To remove

(Alpine)

Remove the hardtop.

Remove the backlight.

Remove the finishing strips from the forward, side and rear flanges.

Remove the clips securing the edges of the headlining to the flanges of the hardtop, and release the lining.

All edges are secured to the flanges in production with an adhesive solution.

Remove the self-tapping screws securing the listing rails and remove the lining.

To refit

Unlike the other models, the headlining listing rails on the Alpine can only be fitted in one position.

Attach the lining at the rear corners, taking the tension before sticking down to remove wrinkles.

Stick down the front edges, working from the centre outwards, following with the side edges last.

Note

Before sticking the edges down, all wrinkles and creases must be eliminated, and no sagging should occur when finally fitted.

Replace the clips securing the edges of the lining to the flanges of the hardtop, following with the finishing strips at forward, rear and side flanges.

Replace the backlight.

Refit the hardtop.

FACIA CRASH ROLL

To remove

(*Sceptre, Vogue, Super Minx*)

Before the crash roll can be removed, the windscreen must first be taken out.

Remove the complete facia panel.

Remove the lower crash roll retainers by drilling out the pop-rivets.

From below the windscreen aperture panel, straighten the tags on the underside of the demister slot bezels and remove bezels.

The crash roll is now released by an upwards and rearwards action.

When refitting, new pop-rivets will have to be used for the retention of the lower retainers.

BODY MOULDINGS

To remove (*side mouldings*)

(*All models*)

The side mouldings on the front wing, front and rear doors, and rear quarter panels are retained by clips along their entire length.

Ease up the lower flange of the moulding from its clips with a piece of wood, sharpened at one end, and pull the moulding away from the body.

(*Upper side moulding*)

Before these mouldings can be removed, the door trim pad will have to be released to gain access to the special fasteners fitted at both ends of the moulding.

After removal of the special fasteners, ease up the lower edge of the mouldings, and pull away from the body.

FIN MOULDINGS

The rear quarter fin moulding is retained in a similar manner to the side mouldings, but in addition, nuts and fasteners are used.

These nuts and fasteners MUST be removed first and are accessible from inside the boot.

BOOT LID MOULDINGS

For the removal of the boot lid mouldings, loosen the nuts inside the boot lid.

From the outside, ease the moulding away from under the large heads of the retaining studs and pull away.

BACKLIGHT BODY MOULDING

When removing, simply knock off with a piece of wood.

After removal, it will be noticed that clips similar to the clips on the door anti-rattle strips are used for the retention of the moulding.

When fitting, lay the moulding in position and tap home. If, for any reason, the backlight assembly and the backlight body moulding have been removed, it is advisable to fit the body moulding first.

To refit

When refitting any of the body mouldings, reverse all these instructions, noting in particular the instructions given under "Backlight Body Mouldings".

Where special fasteners are used, these should be replaced with new items.

NAME BADGES

To remove

Simply pull off the retaining clips from the reverse side of the badge or bonnet motif.

In the case of door badges, the door trim will have to be removed to gain access to the retaining clips.

To refit

When replacing any of the name badges or bonnet motifs, it is advisable to use new retaining clips.

ESTATE CARS

(*Vogue and Super Minx*)

In most instances the body parts of the estate cars are identical with the saloon models. Only where differences occur will they be mentioned individually.

TAILGATE WINDOW

To remove

Commencing at the top edge of the glass and working from the inside, lever the weatherstrip over the flange of the window aperture, while at the same time applying hand pressure to the glass.

Pieces of wedge-shaped wood are the best tools for this purpose.

To refit

Remove all traces of old sealing compound from the glass and weatherstrip.

Apply a coating of "Seelastik" to the face of the weatherstrip in contact with the glass.

Fit the weatherstrip to the glass.

Cut a piece of strong cord, of a length considerably greater than the periphery of the glass. The use of thin string must be avoided as this will cut the rubber.

Insert the cord into the inner channel of the weatherstrip, so that the loose ends are near to the centre of the upper edge. Ensure that the body aperture is clean and free from grease.

Apply a coating of "Seelastik" to the outer channel of the weatherstrip which is in contact with the flange of the aperture in the body.

Allow the two ends of the cord to hang on the inner side of the glass.

Press the assembly into the body aperture from outside the car.

Work the inner lip of the weatherstrip over the flange of the aperture by pulling on the ends of the cord (see Fig. 1), and pull the cord out completely.

If the outer lip of the weatherstrip becomes folded under itself, work it free with a small screwdriver or similar tool, taking care not to damage the paintwork.

Using a Clatonrite tool, B5406 or B5446, insert the finisher strip into the weatherstrip. A section of the weatherstrip and finisher strip is shown in Fig. 2.

It is essential that one or the other of these tools is used for this operation to avoid damage to the weatherstrip and finisher strip.

The Clatonrite tools, B5406 and B5446, are manufactured by Messrs. Clayton Wright, Wellesbourne, Warwickshire, England.

Finally, remove excess sealing compound with a rag moistened in petrol or white spirit.

WINDING WINDOW, REAR DOOR

To remove

Before the window can be removed the door must be completely stripped of all its fittings.

Remove the interior door handle and trim pad. Carefully remove the covering on the inner door panel.

Remove screw and withdraw the bottom stop bracket.

Temporarily replace the window regulator handle and lower the window to approximately the halfway position, support the window and free the regulator operating arm from its location in the glass channel.

Lower the window to the bottom of the door.

Remove the window regulator retaining screws and withdraw the regulator.

Remove the screw from the lower end of the front glass run channel, and remove this channel, together with the top channel, and rear channel.

Both the top and rear channels are retained in position in the window frame by clips.

Remove the door lock with its remote control rod, and lock interior handle.

From just below the window waist, remove the eight screws which retain the small filler panel in the inner door panel.

The window is removed through this panel aperture.

To refit

When refitting the window MUST be installed in the door casing first.

For the remainder of the refitting operations, simply reverse the removal procedure.

FIXED SIDE WINDOWS

To remove and refit

The instructions for the removal and refitting of the side windows are basically similar to those given for the backlight, except that there is no finisher strip.

REAR SEAT

To remove (*cushion*)

Pull the seat cushion up and forward, using the loop provided in the centre of the rear cushion edge.

Take out the screws from the underside of the seat pan which retain the cushion hinges. The cushion is now free to be removed.

To refit. Reverse this procedure.

To remove (*squabs*)

Fold the squab assembly forward and from the rear take out the two large setscrews (one at each side) with their compression (wavy) washers which retain the assembly to the inner rear wheel arches.

The squab is freed by springing in the pegs in the guide slots at the bottom rear edge of the squab.

TAIL GATE ASSEMBLY

To remove (*backlight frame*)

With the top half of the tail gate assembly in the raised position, and supported by a suitable sling, remove the two screws from each side, which secure the backlight stays to the backlight frame.

Finally, from the top inside edge of the backlight frame, remove the two large setscrews with their washers from each hinge.

(*Tailboard*)

Support the tailboard with a stand.

Remove the screws from each cable mounting to the tailboard, then remove the screws retaining the hinges to the body.

Refitting is a direct reversal to the foregoing instructions.

TAIL GATE ASSEMBLY WATER DRAINING

To prevent water collecting inside the backlight frame, natural drain holes in the form of open joints are provided at each lower corner of the backlight frame inner panel, adjacent to where the weatherstrip seats on the inner face of the outer panel.

These drain holes must be cleared of any excess sealing compound or any other obstruction to ensure absolute water drainage from the backlight frame.

If these drain holes are non-existent a $\frac{3}{16}$ in. (4·7 mm.) dia. hole should be drilled into each lower corner of the inner panel.

TAIL GATE LOCK

To remove

Lower the tailboard and remove the tool access panel.

Remove the dome nut and washer which retains the handle to the support.

Remove the three screws securing the recess panel (handle guard) to the support.

Remove the six screws retaining the tool tray.

The cylinder lock is removed by taking out the two screws from its mounting face, lifting and turning through 45° in an anti-clockwise direction, so that the mounting face of the lock can be eased past the striker plate of the lock striker assembly.

The tail gate lock striker assembly is retained by four screws in the top shut face of the tailboard.
When refitting, reverse these instructions.

SUPPLY OF REPLACEMENT BODY COMPONENTS

Body components are not supplied as service replacements in finished trim condition.

When it is necessary to carry out repairs to trimmed parts, arrangements should be made for the supply of trim materials, which can then be applied locally.

WEATHERSTRIPS

"Bostik" adhesive No. 1261

"Bostik" 1261 adhesive is obtainable from most Factors or from the B.B. Chemical Co., Ulverscroft Road, Leicester, England.

It is absolutely imperative that the tin containing the adhesive should be thoroughly stirred before use, and stirred again at intervals until the operation concerned has been completed. If this is not done, certain constituents will sink to the bottom of the tin and unsatisfactory results may be obtained.

"Bostik" 1261 is recommended for attaching all rubber components to metal panels, door flanges, etc.

Preparation of surfaces

(*a*) The porous unskinned surface of the weatherstrip should be cleaned with a wire brush or file carding. Care must be taken to ensure that any deposits of chalk or mica dust are removed.

Should the weatherstrip have been removed to replace a broken glass, and is being re-used, be sure to remove all traces of the glass, splinters or granules from the weatherstrip.

(*b*) Clean the surface of the panel to which the rubber is to be fixed. Petrol or white spirit may be used for this purpose.

If old seals are being re-applied, remove all traces of the old adhesive.

(c) Apply the adhesive to the porous surface of the rubber, and to the metal panel.

It is important that sufficient adhesive is applied to ensure a continuous film over the whole of the contacting surfaces of the rubber and metal.

Bonding

A period of 15 minutes should be allowed for the adhesive to become tacky before the rubbers are mounted in position. The actual time to be allowed for drying may be between 10 and 20 minutes according to temperature and humidity, but in no instance must the maximum period of 20 minutes be exceeded.

Important

Great care must be taken to ensure that the rubbers are placed in the correct positions on the panels as the surfaces are brought together. On no account must rubbers be stretched during the operation, particularly where panel contours change abruptly. In all cases the rubbers must lie naturally and free from tension.

When bringing the surfaces together the rubbers must be pressed firmly on to the panel surfaces.

The greatest possible amount of time should be allowed to elapse before the vehicle is used.

Cleaning off

When the bonding is completed, any surplus adhesive must be cleaned off the surface of the panels. This is best effected by means of a rag treated with a small quantity of petrol or white spirit. Do not saturate the rag, otherwise any excess of liquid may seep into and destroy the bond.

"Seelastik" Compound

"Seelastik" is a proprietary sealing compound recommended for sealing rubber weatherstrip to glass and to metal body panels, as in the case of windscreen and backlight. Its use is recommended also for crack-sealing joints between body panels to prevent the entry of dust and water.

"Seelastik" is obtainable from:— Expandite Products Ltd., Cunard Road Works, London, N.W.10, England.

ROOTES SAFETY BELTS

ALPINE

DESCRIPTION

The lap-diagonal safety belts, fitted in production on home market Alpines, are of two types:—

(*a*) Magnetic buckle, and

(*b*) Latch type buckle.

Anchorage points are built-in and the attachment fittings are similar for each type of belt—see Fig. 1. Each belt may be easily and quickly detached for cleaning or replacement.

INSTRUCTIONS FOR USE

The upper and lower ends of the outer belt pass over the outside shoulder and hip of the user. Position the connector at the inside hip. The inner belt carries the buckle and will provide adjustment after fastening.

To fasten the belt

Take the inner belt in one hand and slide the buckle "A" or "D" towards the free end. Unhook the connector "B" or "C" of the outer belt from the stowage, slip the arm through the belt and bring the connector across the body towards the hip. Couple the buckle and connector together.

To adjust the belt after fastening

Pull the free end of the inner belt until it is comfortably tight. Correct tension should allow a flat hand to be inserted between the belt and the body. The buckle will settle approximately on the hip of the occupant of the seat.

Ensure that the plastic sleeve is positioned where the inner belt passes round the seat.

To release the belt

Apply body pressure to the belt, depress the release plate on the "Latch" type buckle "D" in the direction of the arrow "E", or lift the tongue in the direction of the arrow on the "Magnetic" type buckle "A", when each half of the belt will separate.

Stowage (where provided)

When not in use, stow the outer belt by means of stowage hook at the upper attachment.

CARE OF SAFETY BELTS

Cleaning the belt

The most suitable cleaning agent for the belt is a mild soap and warm water solution. Since nylon does not absorb water to any great extent, it will therefore, dry quickly. Do not saturate.

Fluids which are harmful to nylon are those containing mineral acids. THESE MUST NOT BE USED.

Accident damage

In the event of an accident any safety belt which has been subjected to a shock load should, in the interests of further safety, be renewed.

Regular safety checks

It is important that the safety belt is inspected at regular intervals for chafing and twisting. These safety belts have been scientifically designed and tested and conform to B.S.3254. No alterations or additions must be made.

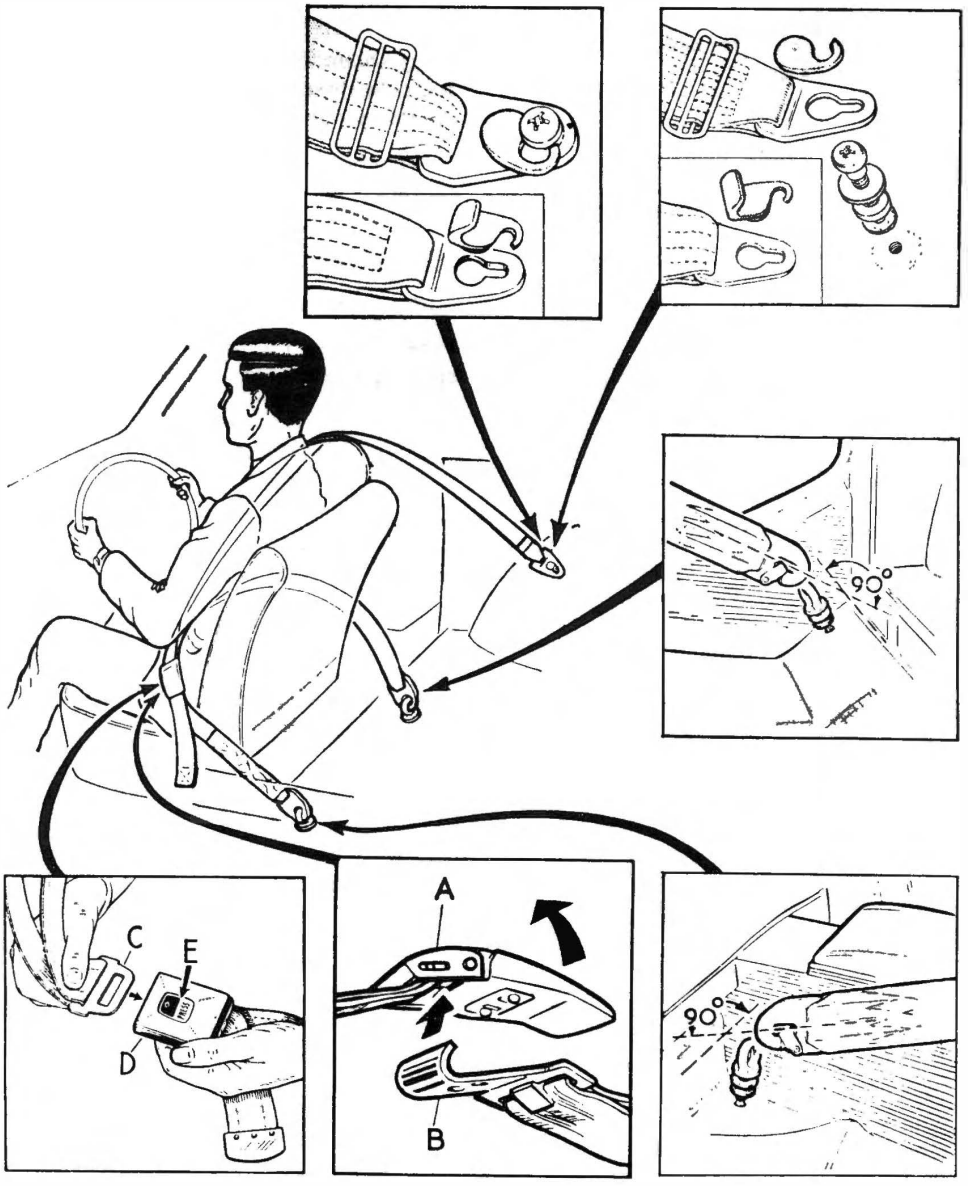

A. MAGNETIC BUCKLE

B. CONNECTOR (MAGNETIC BUCKLE)

C. CONNECTOR (LATCH BUCKLE)

D. LATCH BUCKLE

E. RELEASE BUTTON (LATCH BUCKLE)

Fig. 1. *Safety belt details (Alpine)*

ANCHORAGE POINTS

Wheel arch—outer belt (upper end)

The anchorage point for the upper end of the outer belt is provided in the wheel arch.

Floor—outer belt (lower end)

The lower end of the outer belt is attached as shown; inset in Fig. 1.

Floor—inner belt

The inner belt attached as shown; inset in Fig. 1.

SAFETY BELT

To remove and refit

Wheel arch mounting

Using a blunt instrument, carefully prise the hooked end of the plastic retainer until it is clear of the bolt. Remove the retainer and unhook the attachment.

On certain models the plastic retainer will incorporate a stowage hook.

Floor attachment

Unclip the snap-hook and detach from the eyebolt.

When refitting the belt, reverse the above procedure, ensuring that the belt is not twisted.

RECOMMENDED LUBRICANTS

SECTION P

CONTENTS

Page
LIST OF RECOMMENDED LUBRICANTS ... ... 2—3

RECOMMENDED LUBRICANTS

ENGINE

Where prevailing climatic temperature is:—

SUMP (OIL PAN)	Above 21°C. (70°F.)	Shell Super Motor Oil or Shell X-100 30
	27°C. to —7°C. (80°F. to 20°F.)	Shell Super Motor Oil or Shell X-100 20W
	0°C. to —18°C. (32°F. to 0°F.)	Shell Super Motor Oil or Shell X-100 10W
	Below —15°C. (5°F.)	Shell X-100 Multigrade 5W/20
Upper cylinder lubricant		Shell Upper Cylinder Lubricant

DISTRIBUTOR

Shaft and cam bearing. Contact breaker pivot. Automatic timing (spark) control	Engine oil
Cam profile	Shell Retinax A

GENERATOR ... ... Engine oil

BATTERY TERMINALS ... ... Silicone grease

STEERING UNIT (All temperatures) ... ... Shell Spirax 90 E.P.

GEAR SHIFT

Linkage and selector cable, or
Ball joint and remote control mechanism ... ... Engine oil

ACCELERATOR CONTROL LINKAGE ... ... Engine oil

GEARBOX AND OVERDRIVE (All temperatures) ... ... Shell Super Motor Oil

REAR AXLE

Above minus 23°C. (minus 10°F.)	Shell Spirax 90 E.P.
Below minus 23°C. (minus 10°F.)	Shell Spirax 80 E.P.

FRONT WHEEL HUB BEARINGS ... ... Shell Retinax A

HANDBRAKE

Linkage ... ... Engine oil

BRAKE AND CLUTCH PEDAL PIVOTS	Engine oil
BRAKE AND CLUTCH MASTER CYLINDERS	Lockheed Super Heavy Duty Brake Fluid to S.A.E. Spec. 70R.3 or Girling Fluid S.A.E. Spec. 70R.3

BODY

Hinges, locks, catches	Engine oil

IMPORTANT

1. There is no need to use additives with any of the specified lubricants as those additives considered necessary have already been included during blending. It should be specially noted that, under no circumstances, should additives of any kind be used in the gearbox or overdrive.

2. For continuous high speed driving use Shell Super Motor Oil or Shell X-100 40 if multigrade oil is not available. This is particularly important during hot weather.

HEATING AND VENTILATION

SECTION R

CONTENTS

	Page
INTRODUCTION	2
GAZELLE, MINX AND RAPIER	R1—1
SUPER MINX, VOGUE AND SCEPTRE	R2—1
ALPINE	R3—1

INTRODUCTION

Each section describes the function and servicing of the heater and controls, whether fitted as standard equipment or as a special accessory.

Three separate heater installations are covered in Section R, the section has been sub-divided as follows:—

R1—covering the heater mounted on the engine side of the bulkhead,

R2—covers the heater mounted inside the car and,

R3—which deals with the heater element fitted within the plenum chamber.

The page number in each case carries its respective prefix, starting at R1—1, R2—1 and R3—1, etc. This will also ensure correct identification and insertion of re-issue pages.

In the following sub-sections the general description will describe the basic operation of each heater, the styling of the controls may differ; some having symbols instead of wording: "Blue" for "Cold" and "Red" for "Hot". The double arrowhead corresponds to the maximum heat and/or air available to car or screen.

HEATING AND VENTILATION

SECTION R1

Gazelle, Minx and Rapier

CONTENTS

Page

ADJUSTMENTS ... ... R1—5

GENERAL DESCRIPTION ... ... R1—3

HEATER

Blower

—To remove and refit ... ... R1—7

Controls

—To remove and refit ... ... R1—7

Main unit

—To remove and refit ... ... R1—6

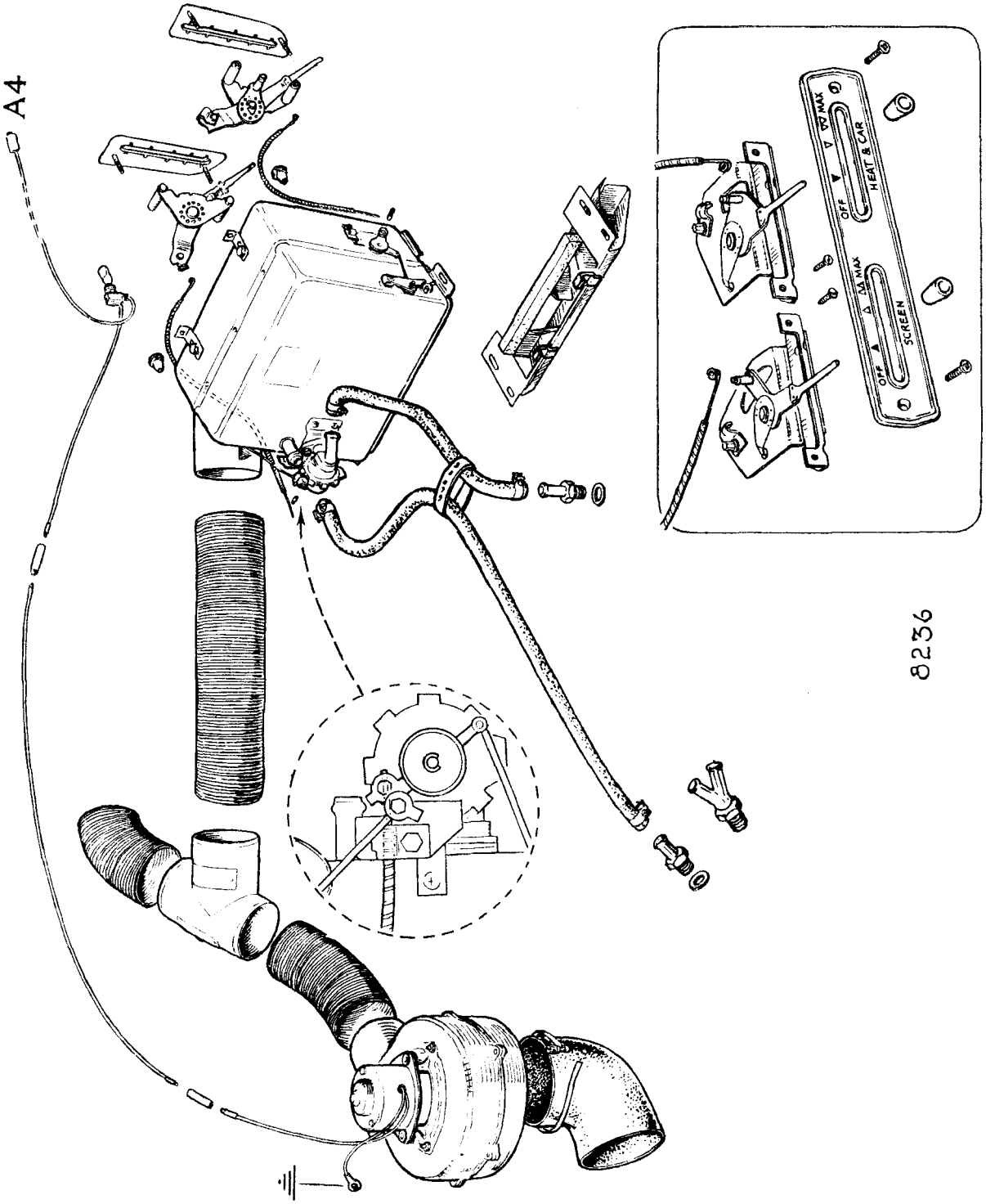

Fig. 1. *Composite heater layout*

HEATING AND VENTILATION

GENERAL DESCRIPTION (See Figs. 1—8)

The heating and ventilating system is designed to deliver fresh air to the windscreen, the car interior or a proportion of both, at any desired temperature between cold and hot according to the setting of the controls.

Fresh air enters the heater by ram effect via the blower-ventilator air hose and is boosted by the action of the blower (if fitted) when required.

There are four flap-valves within the heater (see Fig. 2 and key):—

These valves are controlled by interconnected rods, cams and levers actuated by the facia controls which are connected by means of flexible cables to the water control valve lever (H) and the flap-valve lever (J) (Figs. 9 and 10 respectively).

The "Air Mixing Valve" (A, Fig. 1) controls the mixing of the hot and cold air. When this valve is in the horizontal position all the air by-passes the heater matrix through the "Cold Air Passages" (Fig. 2) and the "Water Control Valve" is closed.

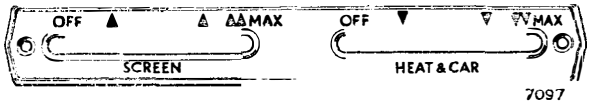

Fig. 3. *Escutcheon—Minx and Gazelle*

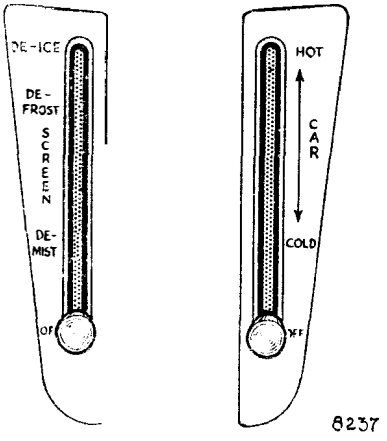

Fig. 4. *Escutcheon—Rapier*

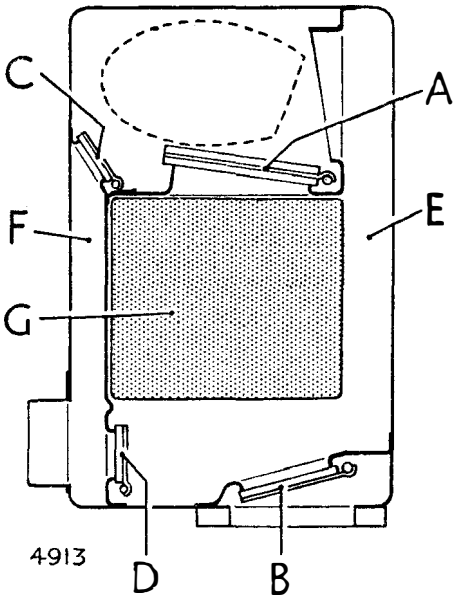

Fig. 2. *Schematic internal view*

Key to Fig. 2

A. AIR MIXING VALVE
B. AIR OUTLET VALVE
C. COLD DEMIST VALVE
D. HOT DEMIST VALVE
E. CAR COLD AIR PASSAGE
F. DEMIST COLD AIR PASSAGE
G. HEATER MATRIX

"CAR" control

When the "Car" control lever is moved from the "Cold" position towards "Hot" the "Air Mixing Valve" 'A' progressively approaches the vertical position (see Fig. 6). First the water commences to flow through the heater matrix, and secondly an increasing air flow passes through the heater matrix until the valve is vertical, when the "Cold Air Passage" is closed off. Full heating is then obtained (see Figs. 6—8).

The "Air Outlet Valve" (B, Fig. 2) controls air flow into the car interior. It is closed when the "Car" lever is set at "off" and is restricted when the "Screen" lever is moved to "DE-ICE", otherwise this valve remains fully open.

The "Cold Demist Valve" (C, Fig. 2) controls the amount of cold air entering the "Demist" Cold Air Passage (F, Fig. 2) and is interconnected with the "Hot Demist Valve" (D, Fig. 2) which controls the warmed air directed to the windscreen.

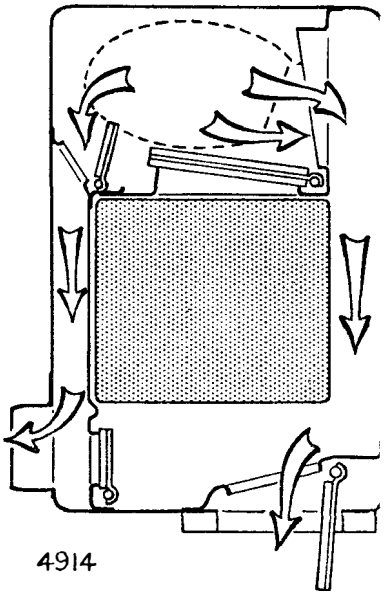

Fig. 5. *Air flow—Ventilation*

"SCREEN" control

Movement of the "Screen" control will result in the following sequence of flap-valve operation:—

In the "off" position both valves (C and D) are closed (Fig. 2).

Moving to the "Demist" position opens valve (C) and cold air only is directed to the windscreen (Fig. 5).

Further movement towards the "DEFROST" position gradually closes valve (C) and opens valve (D) allowing warmed air to enter the Demist Chamber (Fig. 6) until at the "DEFROST" position valve (C) is fully closed and valve (D) is fully open (Fig. 7). The demist air temperature is now the same as that entering the car.

Movement of the "Screen" lever to the "DE-ICE" position restricts the "Car" air outlet and so increases the "SCREEN" air flow to maximum (See Fig. 8).

The water control valve is not interconnected between the "heat and car" and "screen" controls. It is necessary, therefore, to set the "heat and car" control lever to "HOT" to obtain heated air at the windscreen.

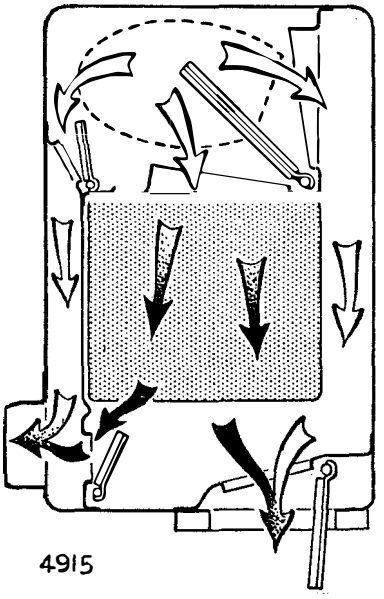

Fig. 6. *General heating to car and screen*

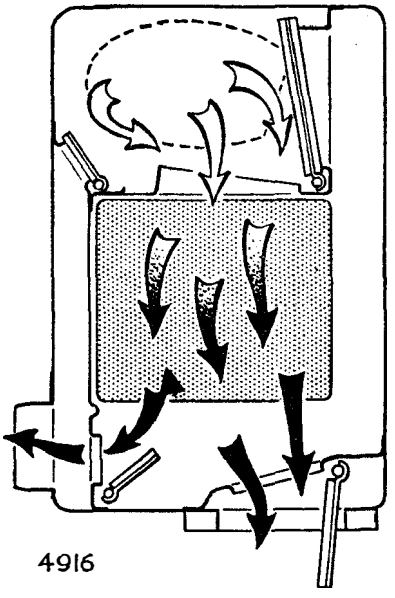

Fig. 7. *Increased heating to car and screen*

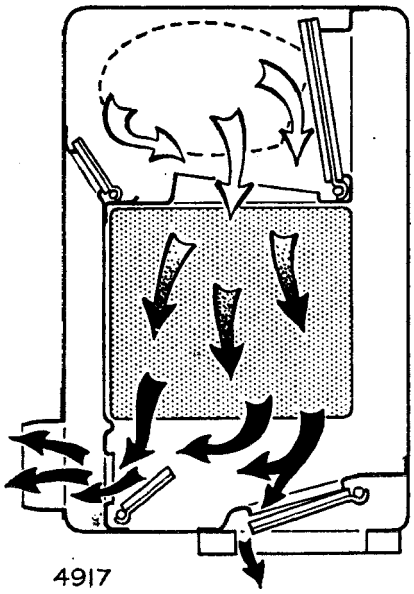

Fig. 8. *Maximum air flow to screen*

ADJUSTMENTS

All the interconnected mechanism is outside the heater, therefore, all the adjustments are made externally.

In the event of malfunction it is imperative that a check be made to ensure that the cable run, fitting and adjustment of the control cables is normal, and that full movement is achieved without slack. Adjust the cables at the heater unit end.

If normal function is not restored or derangement of the linkages has inadvertently occurred, proceed as follows:—

1. "CAR" control (See Fig. 9)

(*a*) Move the "Car" lever to the "off" position, the water control valve lever should now be in its fully anti-clockwise position (valve closed). If this is not so, slacken screw (K), set the lever fully anti-clockwise and re-tighten screw (K).

(*b*) The water valve lever is interconnected with the air mixing valve and the air outlet valve. When the water valve lever is fully anti-clockwise the air mixing valve should be at rest in the horizontal position; to check this slacken screw (L) (this will allow the valve to drop should it be out of position) and now retighten screw (L).

(*c*) If the air outlet valve is not fully closed, move the "Car" lever away from the "off" position until the

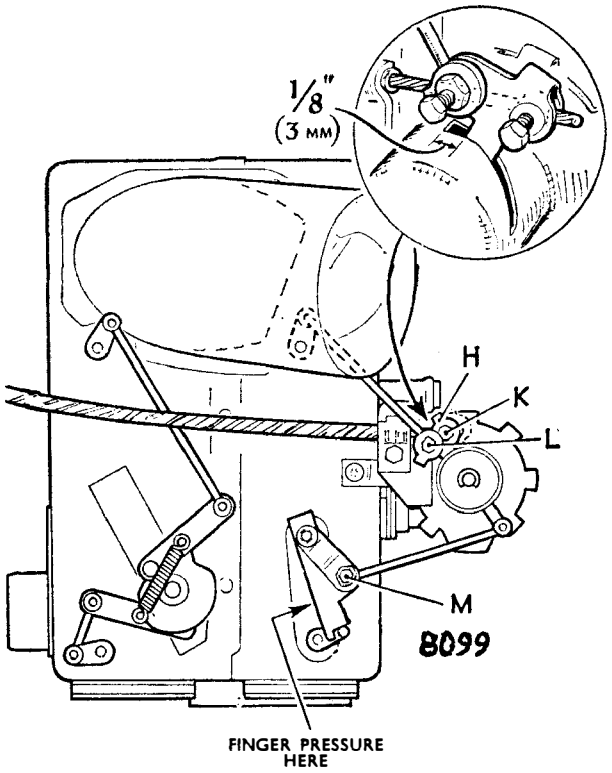

Fig. 9. *Car control, water valve, air mixing valve and air outlet valve adjustment details*

water valve lever (H) is $\frac{1}{8}$ in. (3·2 mm.) from the end of its slot (as shown in Fig. 9).

Slacken screw (M), fully close the air outlet valve by finger pressure on cam (X) and retighten screw (M).

2. "SCREEN" control (See Fig. 10)

It is also necessary to ensure that the air outlet valve is in its correct position when the "Screen" control lever is in the "DE-ICE" position, proceed as follows:—

(*a*) Move the screen lever to the "DE-ICE" position.

(*b*) Slacken screw (N), fully close the air outlet valve by finger pressure on cam (Y) and re-tighten screw (N).

(*c*) Check to ensure that both controls have full movement without slack.

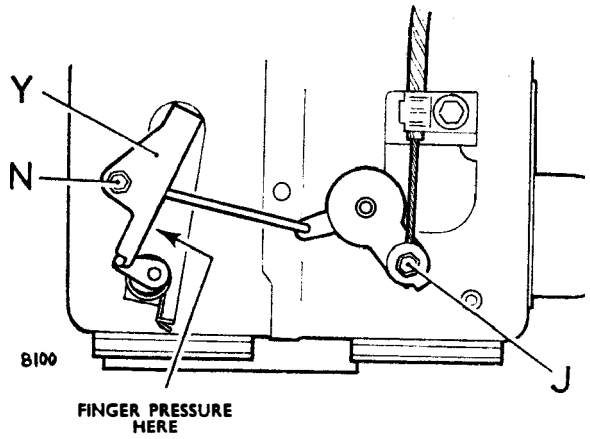

Fig. 10. *Screen control and air outlet valve adjustment details*

REMOVAL OF HEATER COMPONENTS

HEATER

To remove and refit

Disconnect battery.

Drain cooling system—save anti-freeze if used.

Remove air hose between heater and branch pipe.

Disconnect each water hose at heater.

Disconnect "Heat and Car" cable at water valve.

Disconnect "Screen" cable at heater end.

Remove the upper and lower screws which secure the heater to the bulkhead.

Fully close the water valve and wire the lever in this position (to prevent damage to the air outlet valve). *This wire must not be removed until the heater is repositioned and finally tightened down.*

Carefully ease the heater away from the bulkhead and remove from the car.

Refitting is a reversal of the above operations. Ensure that the car air outlet seal and both the sponge collars are in good condition and properly positioned.

Release the wired up water valve lever and check to ensure that the car air outlet valve has unobstructed movement.

Re-couple the control cables, water and air hoses. (See also "ADJUSTMENTS").

Re-connect battery start clock (if fitted) and test equipment.

BLOWER

To remove and refit

Disconnect the battery.

Release the branch pipe at the wing valance and remove air hose between branch pipe and blower.

Disconnect blower cable at the snap tube connector.

Remove blower securing screws and withdraw blower complete with the rubber elbow.

Refitting is a reversal of the above operations, reconnect battery, start clock (if fitted) and test blower.

CONTROLS

To remove and refit

(See also Sections "N" and "O")

Minx

Disconnect the battery.

Remove the control lever knobs—pull off.

Release facia centre instrument panel.

Remove the escutcheon.

Release each control and ease down below the facia rail, disconnect cable and withdraw the control.

Refitting is a reversal of the above operations. When refitting the cable ensure that the outer cable end is flush with its clamp. The control should have full movement in each direction without slack. (See also "ADJUSTMENTS").

Reconnect the battery and start clock (if fitted).

Gazelle

Disconnect the battery.

Remove the control lever knobs—pull off.

Release centre facia section. (See Section "N").

Release each control, disconnect cable and withdraw the control.

Refitting is a reversal of the above operations. When refitting the cable ensure that the outer cable end is flush with its clamp. The control should have full movement in each direction without slack. (See also "ADJUSTMENTS").

Reconnect the battery and start clock (if fitted).

Rapier

Disconnect the battery.

Remove the control lever knobs—pull off.

Remove console and filler panel. (See Section "O").

Release the lower facia panel.

Release control, disconnect cable and withdraw control.

Refitting is a reversal of the above operations. It is important when refitting the cable that the outer cable end is flush with its clamp. (See also "ADJUSTMENTS").

Reconnect battery and start clock (if fitted).

HEATING AND VENTILATION

SECTION R2

Super Minx, Vogue and Sceptre

CONTENTS

Page

ADJUSTMENTS ... ... R2—5

GENERAL DESCRIPTION ... ... R2—3

HEATER

Blower

—To remove and refit ... ... R2—8

Controls

—To remove and refit ... ... R2—8

Main unit

—To remove and refit ... ... R2—7

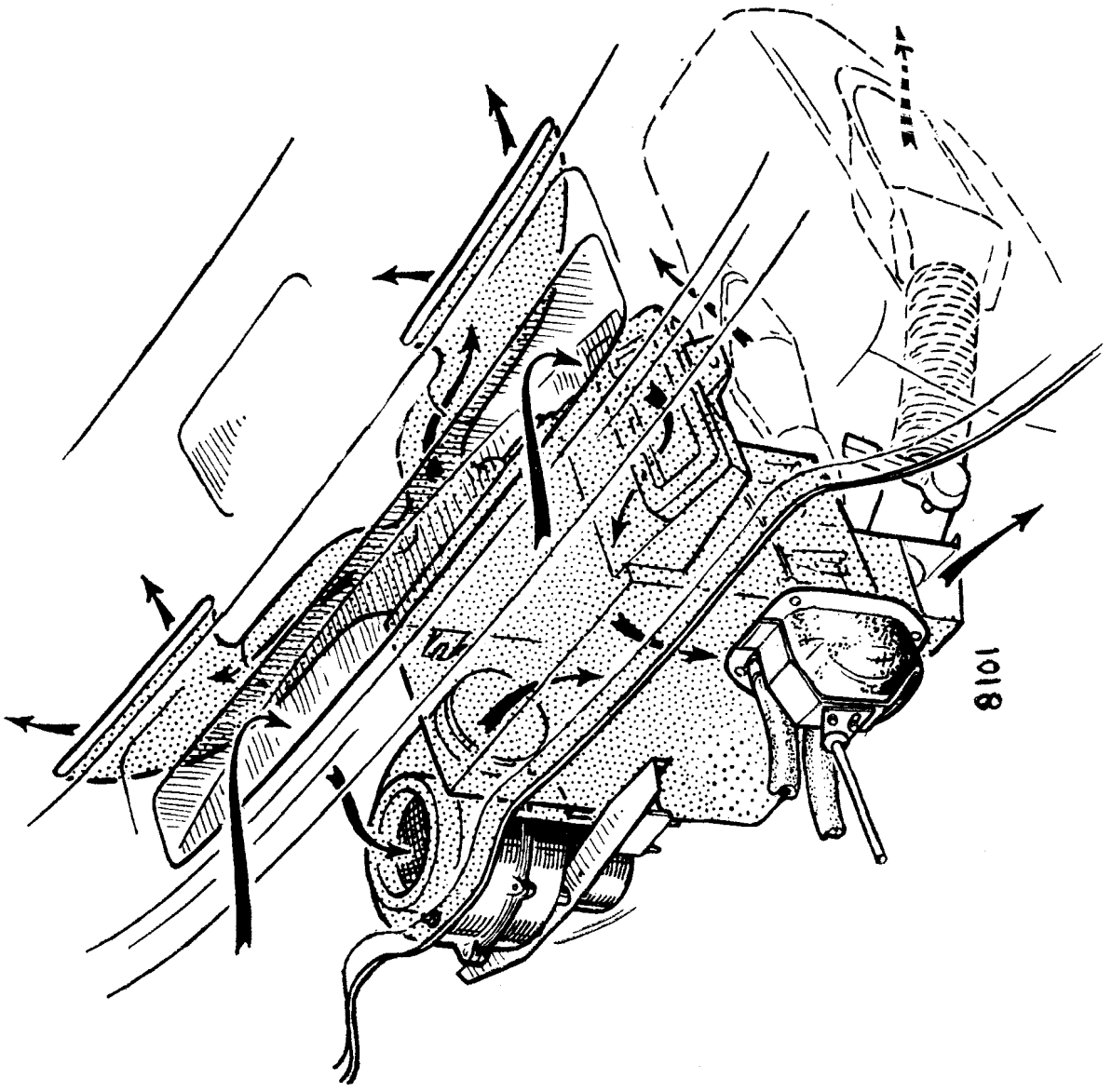

Fig. 1. *Heater layout and air flow*

HEATING AND VENTILATION

GENERAL DESCRIPTION

The heating and ventilating system is designed to deliver fresh air to the windscreen, the car interior or a proportion to both, at any desired temperature between cold and hot according to the setting of the controls.

Fresh air enters the heater by ram effect *via* the air inlet chamber or under pressure from the blower.

There are five flap valves within the heater, see key to Fig. 2.

The valves are controlled by a series of interconnected rods, cams and levers actuated by the facia mounted "heat and car" and "screen" controls, these are connected by means of flexible cables to the water valve lever and screen control lever respectively.

The "Air Mixing Valve" (2, Fig. 2) controls the mixing of the hot and cold air. When this valve is in the horizontal position the heater matrix is by-passed and the water valve is closed. (See Figs. 2—7).

The "Cold Screen Valve" (3, Fig. 2) controls the amount of cold air entering the "Screen Cold Air Duct" and is interconnected with the "Screen Hot Valve" (5, Fig. 2) which controls the heated air directed to the windscreen.

"Heat and Car" control

When the "heat and car" control lever is moved from the "COLD" or "BLUE" position towards "HOT" or "RED", the "Air Mixing Valve" (2) progressively approaches the vertical position. (See Fig. 5). First the water, from the engine cooling system, commences to circulate through the heater matrix (8) and secondly an increasing air flow passes *via* the heater matrix until the valve is vertical, when the car cold air duct (6) will be closed. Full heating is then available. (See Figs. 2—6).

The "Car Air Outlet Valve" (7, Fig. 2) controls the air flow into the car interior. It is closed when the "heat and car" control lever is at "OFF"; it automatically opens when the lever is moved away from "OFF". The valve is almost closed, however, when the "screen" control lever is set at "DE-ICE" or "MAX". (Fig. 6).

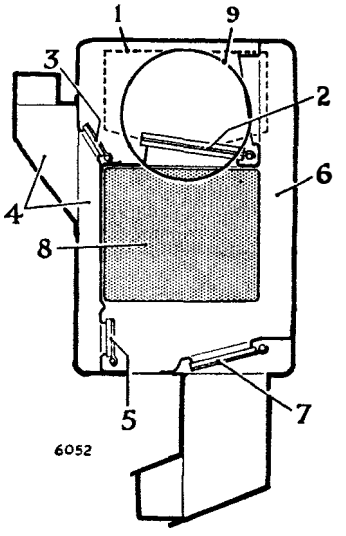

Fig. 2. *Schematic view—Controls at "OFF"*

1. NON-RETURN WIND BLOWN INLET FLAP VALVE (Shown dotted)
2. AIR MIXING VALVE
3. SCREEN COLD VALVE
4. SCREEN COLD AIR DUCT
5. SCREEN HOT VALVE
6. CAR COLD AIR DUCT
7. CAR AIR OUTLET VALVE
8. HEATER MATRIX
9. AIR INLET FROM BLOWER

"Screen" control

Movement of the "screen" control lever will result in the following sequence of flap-valve operation. (See Figs. 4—7).

1. In the "OFF" position both the screen "HOT" and "COLD" valves are closed.

2. Movement to the "DE-MIST" or "MAX" position opens only the "Cold" screen valve, the "Hot" screen valve remaining closed. (Fig. 4).

3. Further movement towards the "DE-ICE" or "MAX" position gradually closes the "Screen Cold Valve" and opens the "Screen Hot Valve". (Figs. 5 and 6).

4. In the "DE-ICE" or "MAX" position the "Car Air Outlet Valve" is partially closed thus further increasing the air flow to the windscreen. (Fig. 7).

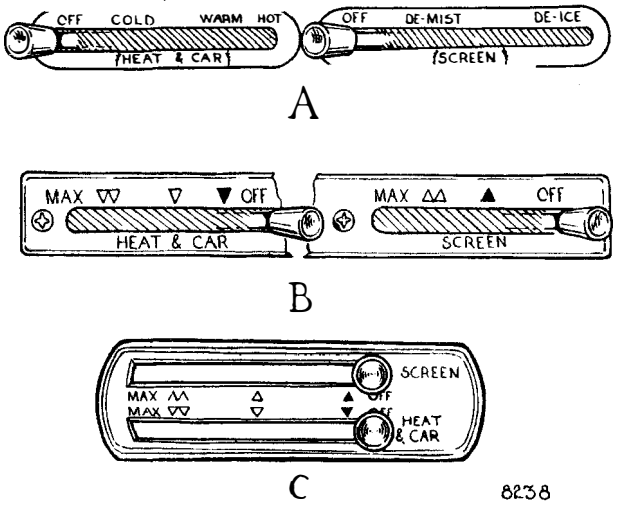

Fig. 3. *Control escutcheons*

A — SCEPTRE
B — SUPER MINX
C — VOGUE

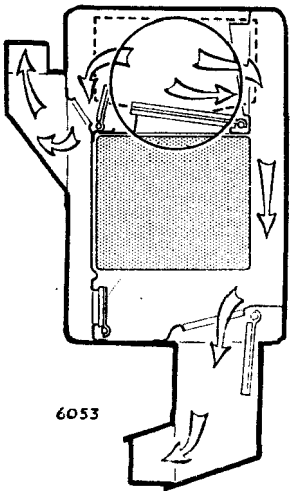

Fig. 4. *Ventilation*

On the Sceptre there is also an independent air valve at the base of the heater. This controls the supply of air (cold or heated) via the console air outlets. To open, move the lever towards the heater and away from the heater to close.

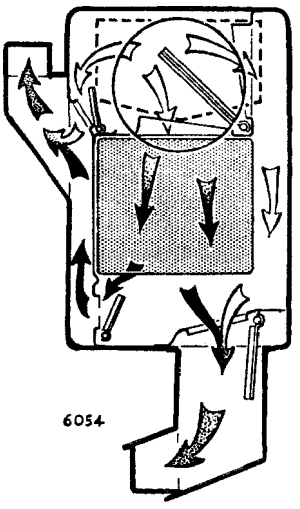

Fig. 5. *General heating to car and screen*

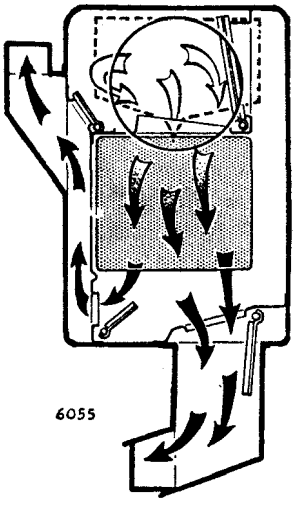

Fig. 6. *Increased heating to car and screen*

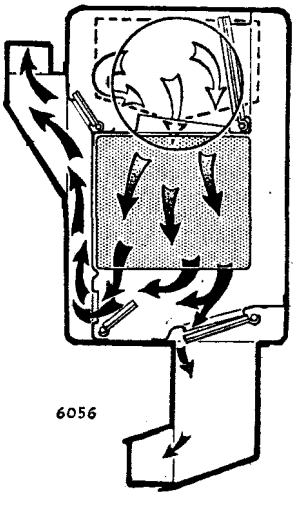

Fig. 7. *De-icing screen*

The water control valve is not interconnected between the "heat and car" and "screen" controls. It is necessary, therefore, to set the "heat and car" control lever to "HOT" to obtain heated air at the windscreen.

ADJUSTMENTS

All the interconnected mechanism is correctly set prior to despatch; the adjustment points are located at each end of the heater casing. In the event of malfunction it is imperative that a check be made to ensure that the heater installation, the fitting and adjustment of each control cable is correct, and also that the outer cable is properly secured. Adjust the cables at the heater unit end. Full movement should be obtained without slack.

A further check should be made to ensure (*a*) that the water valve shuts off the supply of hot water when the "heat and car" control is set to "COLD" or "BLUE", and (*b*) that the heater matrix is not air-locked.

If normal function is not restored or derangement of the linkage has inadvertently occurred, proceed as follows:—

1. **"Heat and Car" control** (See Fig. 8)

(*a*) Move the "heat and car" lever to the "OFF" position. The water valve lever should now be in its fully clockwise position (closed). If this is not so, slacken the inner cable trunnion screw (A), hold the inner cable end with pliers, set the lever fully clockwise and re-tighten trunnion screw (A).

(*b*) The water valve lever is interconnected with the "Air Mixing Valve" and the "Car Air Outlet Valve". When the water valve lever is fully clockwise the air mixing valve should be at rest in the horizontal position; in order to check this, slacken screw (B) (this will allow the air mixing valve to drop should it be out of position), now re-tighten screw (B).

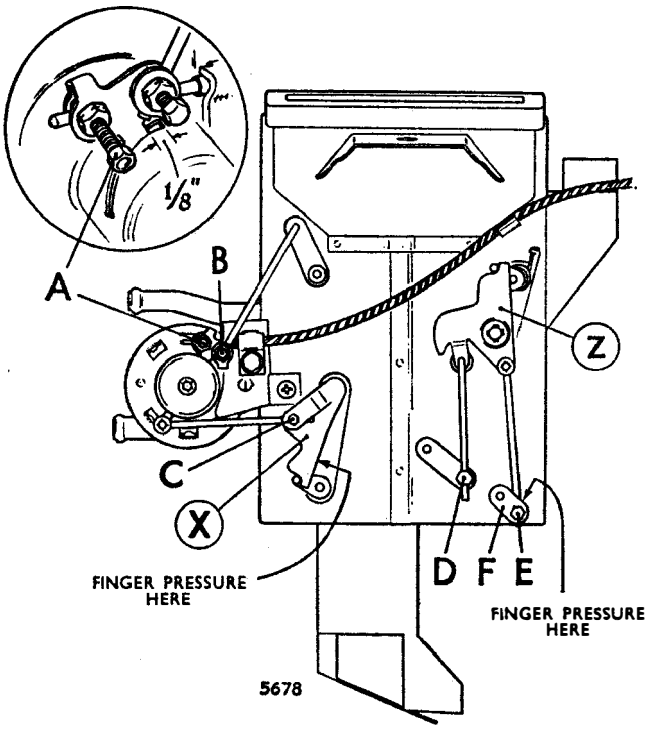

Fig. 8. *"Heat and Car" control, water valve, air mixing valve and car air outlet valve adjustment details*

(*c*) With the "heat and car" control lever still in the "OFF" position the "Car Air Outlet Valve" should be closed. To check this, move the "heat and car" control lever away from the "OFF" position until the water valve lever is $\frac{1}{8}$ in. (3 mm.) from the end of its slot as shown inset in Fig. 8. Now slacken screw (C), fully close the "Car Air Outlet Valve" by finger pressure on cam (X), now re-tighten screw (C).

2. "Screen" control (See Figs. 2, 8 and 9)

(*a*) "Screen" control "Cold" and "Hot" valves.

(i) When the "screen" control lever is set to "OFF" the "Cold" valve (3, Fig. 2) should be shut by the action of cam (Z) Fig. 8. If this is not so, loosen screws (D) and (E), turn the cam fully anti-clockwise and re-tighten screw (D).

(ii) With the "screen" control still in the "OFF" position apply downward pressure on lever (F) to close the "Hot" screen valve, now re-tighten screw (E).

(*b*) It is also necessary to ensure that the "Car Air Outlet Valve" is in its correct position when the "screen" control lever is set to "DE-ICE" or "MAX" proceed as follows:—

(i) Move the "screen" control lever to "DE-ICE" or "MAX" and the "heat and car" lever to "HOT" or "MAX".

(ii) Slacken screw (G), apply finger pressure on cam (Y), this will set the car air outlet valve to its predetermined position for increasing the air flow to the windscreen.

Retighten screw (G).

Re-check to ensure both controls have full movement without slack.

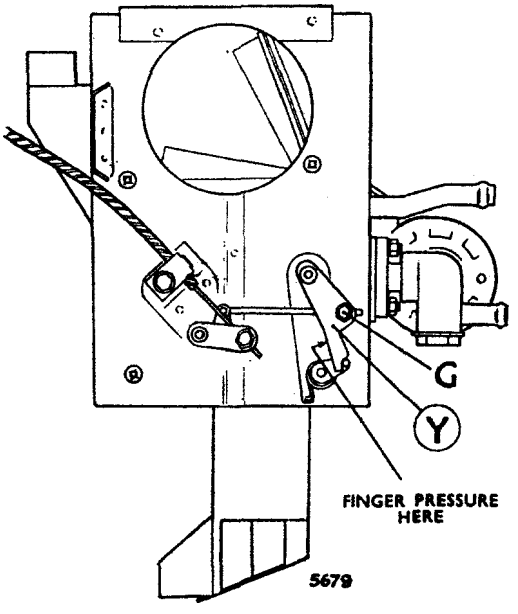

Fig 9 *"Screen" control-De-ice setting of car air outlet valve*

HEATER

To remove and refit

(*See also Sections "O"—Body and "N"—Electrical*)

Sceptre

Disconnect battery.

Set "heat and car" lever to "HOT" ("RED").

Drain cooling system (save anti-freeze if used).

Remove air cleaner.

Release choke cable at carburettor.

Disconnect heater inlet and outlet hoses at the heater unit (bulkhead) end.

Release the carburettor control and remove the plastic water valve cover.

Remove blower. (See BLOWER—To remove and refit).

Remove gear lever knob, gaiter and ashtray.

Release panel light and blower switches.

Remove console cover leaving the gear lever grommet in position and remove console body. (See Section "O").

Remove the nut and washer from the lower heater securing bracket.

Remove loudspeaker grille and loudspeaker (if fitted).

Remove radio (if fitted in the approved position) or map pocket and the steady bracket.

Remove parcel shelf and glovebox. (See Section "O").

Disconnect the "heat and car" control cable at the water valve lever and release the cable at the clamp on the heater body.

Disconnect the "screen" control cable at the heater end.

Remove switch panel. (See Section "N").

Release rubber manifold at demister ducts.

Remove the two screws with plain and spring washers which secure the heater at each upper location. Now carefully remove the heater assembly complete.

Refitting is a reversal of the above operations. Care, however, should be exercised to ensure proper sealing at the two air inlets and also when refitting the blower; push heater to the right and upward. Ensure that the rubber manifold is properly positioned on the heater and at each demister.

Reconnect battery and start clock.

Super Minx and Vogue

Disconnect battery.

Set the "heat and car" control lever to "HOT" ("RED"), and drain cooling system—save anti-freeze if used.

Disconnect the inlet and outlet hoses at the heater end.

Remove the nut and washer from the heater lower securing bracket.

Release the carburettor control and remove the plastic water valve cover.

Remove the blower, as its outlet extends into the heater. (See BLOWER—To remove and refit).

If radio is fitted in the approved position, remove the assembly.

Remove the parcel shelf and glove box. (See Section "O").

Disconnect the "heat and car" cable at the water valve and release the cable from the clip on the heater body.

Disconnect the "screen" cable at the heater end.

Release the rubber manifold at the demister ducts.

Remove the two screws with plain and spring washers which secure the heater at each upper location. Now carefully remove the heater assembly.

Refitting is a reversal of the above operations. Care, however, should be exercised to ensure proper engagement of the blower outlet into the heater with the seal properly positioned on the blower outlet; push to the right and upward to ensure a good seal at the fresh air inlet.

Ensure that the rubber manifold is properly positioned on the heater and at each demister.

Reconnect battery and start clock (if fitted).

BLOWER

To remove and refit

All models

Disconnect battery.

Disconnect blower cables at the switch.

Withdraw blower switch cables to the engine side of the bulkhead.

Remove the two self-tapping screws securing the lower mounting bracket and earth lead to the bulkhead.

Support the blower, remove the upper securing nut, plain and spring washers.

Withdraw the blower.

Refitting is a reversal of the above operations. When refitting the blower, push upward and inward to ensure sealing at air inlet and outlet and also to ensure alignment with the heater air inlet.

It may be necessary to slacken off the heater securing screws to assist the blower outlet to enter the heater body.

Reconnect battery and start clock (if fitted).

CONTROLS

To remove and refit (See Figs. 10—12)

Sceptre (Fig. 10)

In order to remove a control assembly it is necessary first to remove the console complete, in order to disconnect the cable at the heater end. It is also necessary to release the switch panel to assist in refitting. (See Sections "N" and "O").

Disconnect battery.

Remove console complete. (See Section "O").

Remove radio (if fitted) or map pocket and steady bracket.

Remove control lever knob (pull off).

Remove the switch panel. (See Sections "N" and "O").

Release cable at heater unit end (hold trunnion against turning to prevent distortion of inner cable).

Withdraw control complete with cable.

Refitting is a reversal of the above operations. If the cable is removed from the control, it is essential when refitting that the outer cable end is flush with its clamp.

When reconnecting the cable at heater end care must be taken to ensure that the water valve lever movement is not restricted by the outer cable end. Also ensure that switch and instrument wiring is well clear of the heater facia controls.

To reconnect cables to heater

Set both control levers to "off".

Set heater water valve lever fully clockwise (i.e. closed). Pass the "heat and car" inner cable through the clamp and trunnion, setting the outer cable end flush with the clamp and tighten the clamp screw. Finally tighten the trunnion screw.

Now set the heater "screen" lever fully anti-clockwise and couple the cable in a similar manner to that outlined above for the "heat and car" cable.

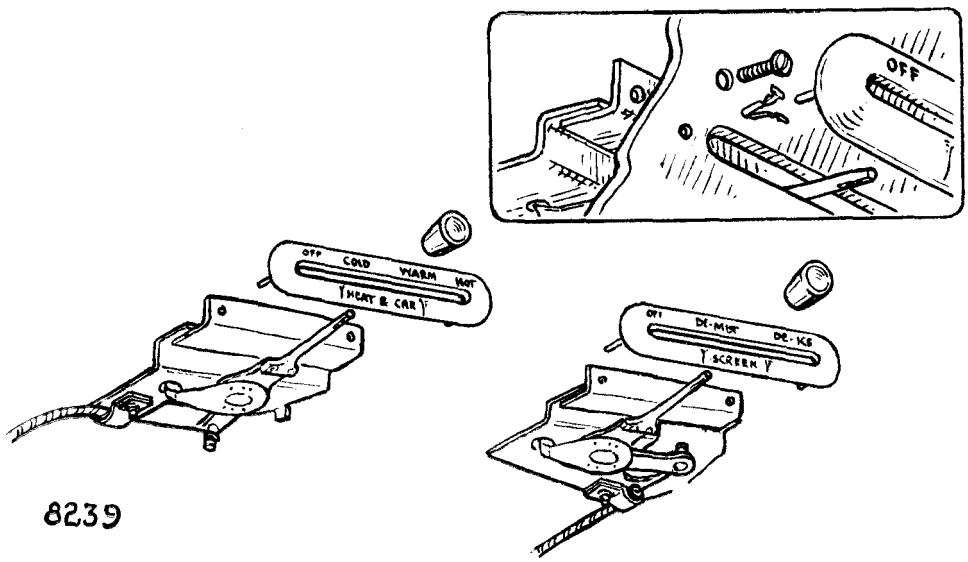

Fig. 10. *Sceptre control arrangement*

Super Minx (Fig. 11)

Disconnect battery.

Remove parcel shelf. (See Section "O").

Remove control lever knobs (pull off).

Remove the two screws which secure the escutcheon (these also retain the control assembly to the facia).

Disconnect the "heat and car" cable and the "screen" cable at the heater end.

Withdraw the control assembly.

Refitting is a reversal of the above operations, ensure that the plastic spacers are fitted with the thicker side to the facia. If the cable is removed, it is essential when refitting that the outer cable end is flush with its clamp.

Keep the facia and instrument wiring clear of the heater controls.

Reconnect the battery and start clock (if fitted).

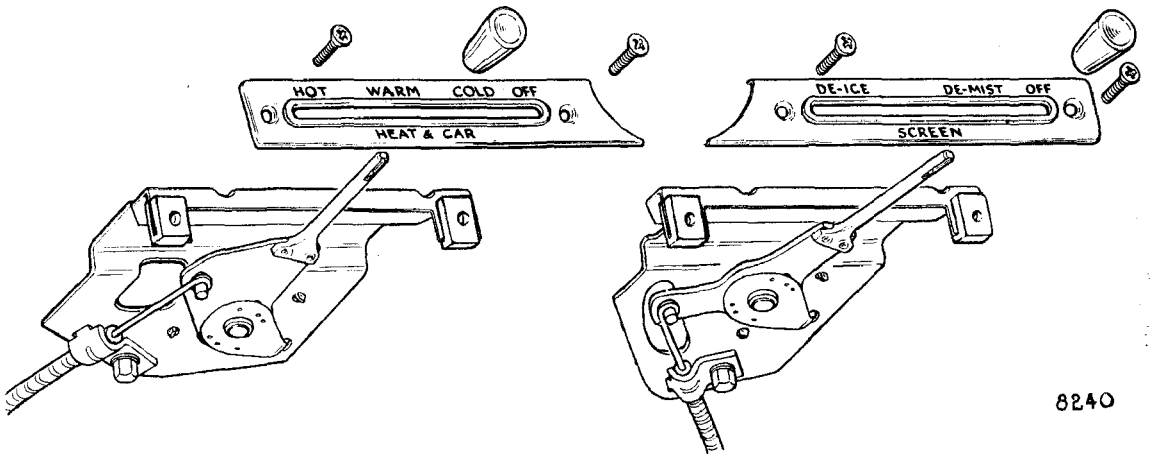

Fig. 11. *Super Minx control arrangement*

Vogue (Fig. 12)

Disconnect the battery.

Disconnect the "heat and car" and "screen" cables at the heater end.

Remove the parcel shelf. (See Section "O").

Remove the control lever knobs (pull off).

Remove the escutcheon—use a screwdriver and some protection for the polished facia panel. Carefully lever the escutcheon away from the facia panel at each side. The escutcheon is retained by means of special "Spire" fixings.

Remove the two countersunk screws and carefully remove the assembly.

Refitting is a reversal of the above operations. It may be necessary to renew the "Spire" fixings in order to ensure proper retention of the escutcheon.

If the cables are removed from the control, it is essential when refitting the cables that each outer cable end is flush with its clamp.

When refitting the control assembly, ensure that all instrument and facia wiring is well clear of the heater controls.

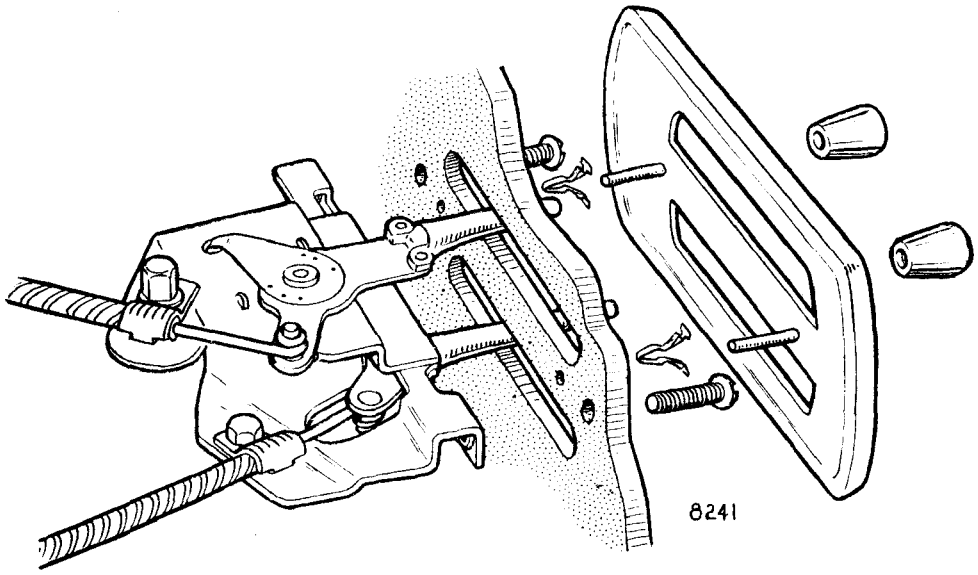

Fig. 12. *Vogue control arrangement*

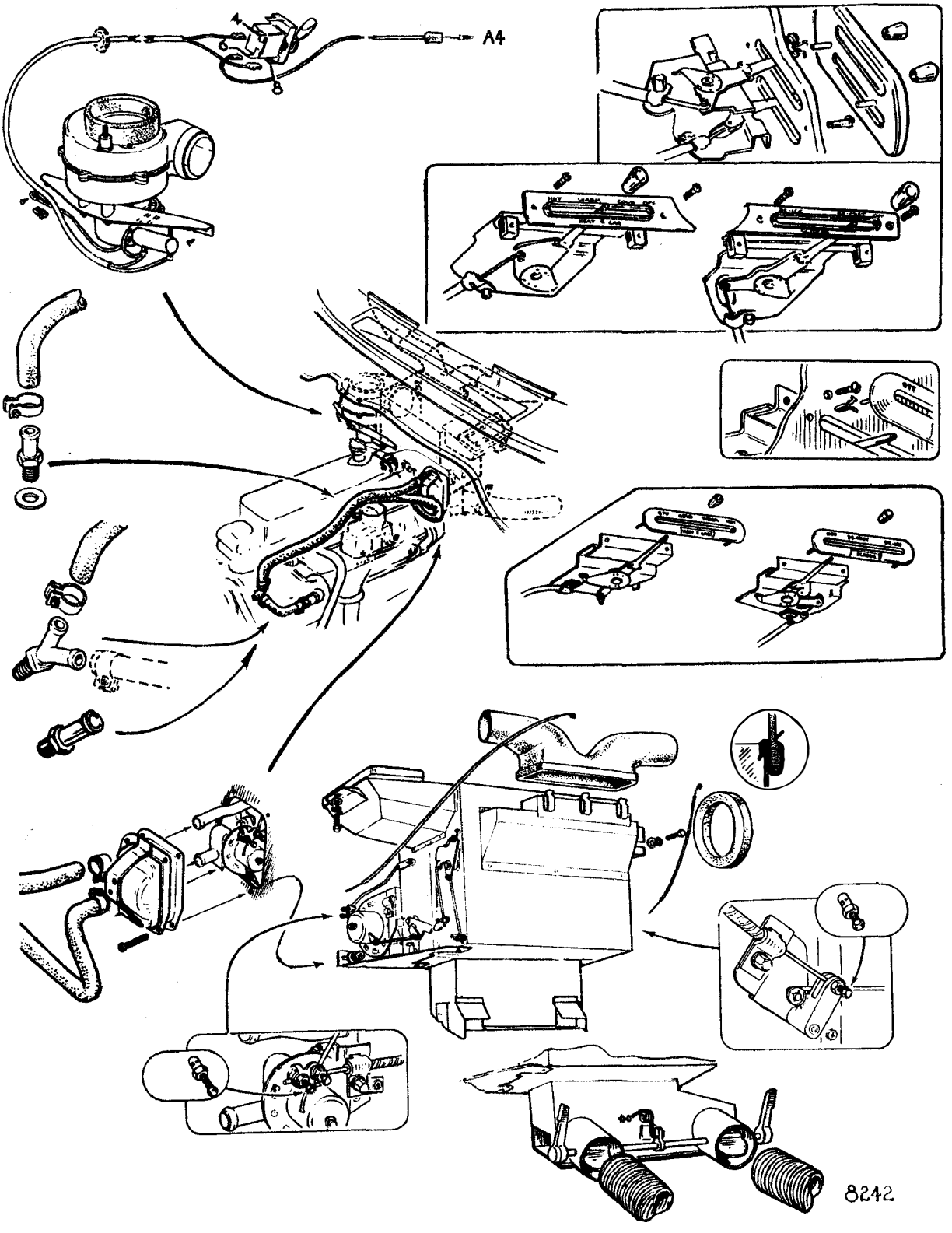

Fig. 13. *Composite heater layout*

HEATING AND VENTILATION

SECTION R3

Alpine

CONTENTS

Page

GENERAL DESCRIPTION ... ... R3—3

HEATER

Blower

—To remove and refit ... ... R3—4

Control

—To remove and refit ... ... R3—3

Element

—To remove and refit ... ... R3—3

To bleed the heater ... ... R3—3

Water valve

—To remove and refit ... ... R3—3

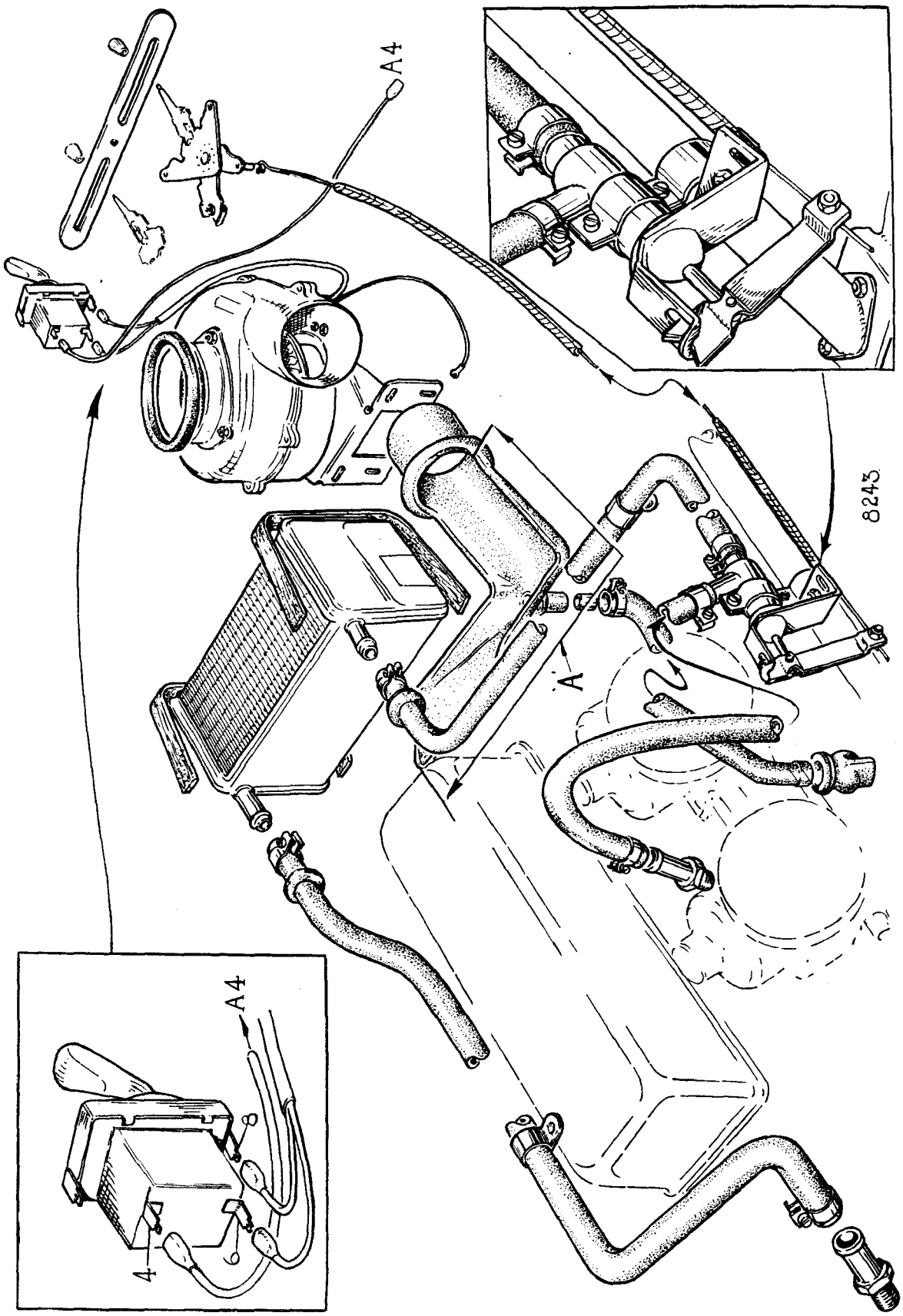

Fig. 1. *Alpine heater—exploded layout*

HEATING AND VENTILATION

GENERAL DESCRIPTION

The heater element and its associated control, supplement the fresh air system built into the car. The temperature of the fresh air, directed to either car or screen, is regulated by means of the "Temperature" control. Use of the blower increases the volume of air.

A two-speed blower is fitted and is controlled by means of the three position switch fitted at the outer end of the facia:—

UP	... ...	OFF
CENTRE	...	SLOW
DOWN	...	FAST

Hot water from the engine cooling system circulates through the heater element and is returned to the inlet side of the water pump. The heater element is fitted into the air box built into the scuttle.

HEATER ELEMENT

To remove and refit

Set the "Temperature" control to "HOT" (Max.). Drain cooling system—save anti-freeze if used.

Uncouple the bonnet (hood) release control at the air box and remove the air box cover.

Disconnect the inlet and outlet hoses and withdraw each clear of the element.

Lift out the element.

Refitting is a reversal of the above operations, care must be taken to ensure that each felt strip and the rubber drain trough is correctly positioned and also that the adhesive strip ("A" in Fig. 9) is not disturbed. After refilling it may be necessary to bleed the heater—See "TO BLEED THE HEATER".

WATER VALVE

To remove and refit

Set the "Temperature" control to "HOT" (Max.) and drain the cooling system—save anti-freeze if used.

Release the control cable.

Disconnect each hose at the water valve.

Undo the retaining screws and remove the water valve complete with bracket.

Refitting is a reversal of the above operations.

After refilling it may be necessary to bleed the heater—See "TO BLEED THE HEATER".

TO BLEED THE HEATER

As the heater element is above the level of the radiator it may be necessary to bleed the heater after refilling the cooling system:—

Release the inlet hose (between the water valve and the element) at the highest point and, with the engine idling, dispel the air and re-secure hose. Top-up cooling system as required.

TEMPERATURE CONTROL

To remove and refit

Release the outer cable clamp and remove the inner cable from the peg on the control lever.

Remove the control lever knob—screw off.

Undo the two screws, with nuts and washers which secure the control to the facia and withdraw the control. Note the spacing washers fitted between the control and the facia lugs.

To remove the control cable proceed as follows:—

Release the inner cable at the water valve trunnion and withdraw the cable to the car interior. Now feed a length of welding wire through the outer cable, withdraw the outer cable leaving the slave wire in position to act as a guide when refitting or renewing the cable.

Refitting of both the control and the cable is a reversal of the above instructions.

When refitting the cable, each end of the outer cable should be flush with the end of its clamp. Full movement of the control lever should be obtained without slack.

BLOWER

To remove and refit

Disconnect the battery.

Disconnect the blower cables at the switch. Untape the blower cables from the facia harness.

Remove the air deflector housing secured to the tunnel by four screws, and release the left-hand de-mist hose.

Remove the four nuts and washers, one of which also secures the blower earth lead and carefully withdraw the blower.

Refitting is a reversal of the above operations.

When refitting the blower ensure that the upper sponge collar is in position and also that the blower outlet enters the rubber at the air box inlet.

When reconnecting the blower, connect the green cable to terminal 6 on the switch, the brown cable to terminal 8 and the supply cable (also green) to terminal 4.

Reconnect the battery, start the clock (if fitted) and test the blower.

ANTI-FREEZE AND FROST PRECAUTIONS

See Section "A".

SPECIAL TOOLS

SECTION S

CONTENTS

Page
LIST OF SPECIAL TOOLS 2

SPECIAL TOOLS

obtainable from:—

V. L. CHURCHILL & CO. LTD.

London Road,

Daventry,

Northamptonshire, England.

Always look at the sub-section "General Tools" in addition to the sub-section in which you are interested

Engine and Clutch

RG.41	Clutch plate centraliser	
RG.89A	Timing cover centraliser	
RG.209	Camshaft wheel remover	
RG.225	Cylinder head nut crowfoot wrench ($\frac{5}{8}$ in. A.F.)	
RG.290	Starter dog nut wrench	
RG.336–5	Connecting rod aligner adaptor (use with 335 and 336 alignment jig and multi-purpose arbor)	
RG.479	Valve guide remover/replacer	
RG.720	Engine support	
RG.6513A	Valve spring compressor complete with foot	
38/U3	Piston ring compressor	
316X	Valve seat cutter handle	
316–10	Valve seat cutter pilot	
317–20	Valve seat cutter, exhaust	(Alternative tool 317–22)
317G–20	Glaze breaker, exhaust	(Alternative tool 317G–22)
317–25	Valve seat cutter, inlet	

Gearbox and Overdrive

RG.62	Selector shaft loading adaptor
RG.482	Mainshaft rear nut wrench
L.178	Unidirectional clutch assembly fixture
L.183A	Oil pump body remover (main tool)
L.183A–2	Oil pump body remover adaptor
L.186	Tailshaft bearing replacer
L.187	Tailshaft bearing remover (use with RG.4221B)
L.188	Hydraulic test equipment
L.204B	Tailshaft oil seal remover adaptor (use with 7657)
L.209A	Annulus spigot bearing replacer
L.211	Tailshaft bearing nut wrench
L.212	Tailshaft oil seal replacer
L,213	Oil pump valve seat key

Rear Axle

RG.16A	Axle shaft remover (main tool)
RG.16A–5A	Axle shaft remover adaptor—wire wheels
RG.188D	Rear hub remover
RG.188D–1A	Rear hub bearing adaptor, use with RG.16A–5A
RG.188D–2	Rear hub thrust block and bolts—wire wheels
RG.292	Differential bearing replacer (use with 550)
RG.295B	Differential assembly jig
RG.421	Adjustable flange holding wrench
RG.447	Bevel pinion front bearing cup remover/replacer (use with 550)
RG.448	Bevel pinion rear bearing cup remover/replacer (use with 550)
RG.4221B	Differential and pinion bearing hand press (main tool)
RG.4221B–20	Adaptor set for RG.4221B (differential bearings)
RG.4221B–21	Adaptor set for RG.4221B (pinion bearing)

Front Suspension and Steering

RG.50D	I.F.S. coil spring compressor (main tool)
RG.50D–2	Adaptor set for RG.50D
RG.190C	Ball joint remover
RG.191A	Upper and lower ball joint taper pin remover

Front Suspension and Steering—continued

RG.198C	Drop arm remover	
RG.318	Fulcrum pin bush tool	
RG.319	Upper swivel bearing remover/replacer	
RG.403	Static laden gap gauge, front pair	Alpine only
RG.404	Static laden gap gauge, front pair	All except Alpine

Brakes

RG.331	Disc brake piston clamp (Lockheed brake)	
2030	Brake servo end cover remover/replacer	

General Tools

RG.387	Torque wrench 6— 40 lbs./ft.	
No. 12	Torque wrench 20—100 lbs./ft.	
No. 13	Torque wrench 50—170 lbs./ft.	
No. 4	Torque wrench 150—400 lbs./ft.	
370	Taper base, for use on power press (optional)	
550	Driver handle (main tool)	
1602	Baty dial indicator set	
7066	Circlip pliers, c/w three pairs of points	
7657	Oil seal remover (main tool)	

Torque wrenches in daily use should be checked at intervals, not exceeding three months, to ensure that accuracy is maintained.

General Tools—continued

Available from local factor

HA.52 or Alternative	Standard Tipco socket as gearbox mainshaft front nut wrench. (Bi-hexagonal end requires facing before use).
	Socket details: 1⅝ in. AF × 1¾ in. inside depth × ¾ in. sq. drive; use with ESHP or alternative.
ESHP	Convertor ½ in. socket to ¾ in. plug

Bore ring gauges are available from:—

COVENTRY GAUGE & TOOL CO. LIMITED
Fletchamstead,
Coventry, England.

B.5406 }
B.5446 } Weatherstrip finisher installation tool available from:—

HOWARD CLAYTON—WRIGHT LIMITED
Wellesbourne,
Warwickshire, England.

64947013 Girling shoe horn. Available from:—

GIRLING LIMITED, SALES AND SERVICE
Birmingham Road,
West Bromwich, Staffordshire, England.

PRINTED IN ENGLAND BY EDWARDS THE PRINTERS LTD., COVENTRY